M-11337 Sh. 102

REVISIONS			
MK'D	DATE	BY	DESCRIPTION
A	[illegible]	[illegible]	MOTOR ON M-13 UNDER SLING
B	22APR85	SYM	CONVEYOR M08 SHORTENED 6"
0	7/2/86	[illegible]	ER791
1	1-15-87	WE [illegible]	REVISED PER ECN NO. 13G1
2	1-26-04	LRO	ECN 25782

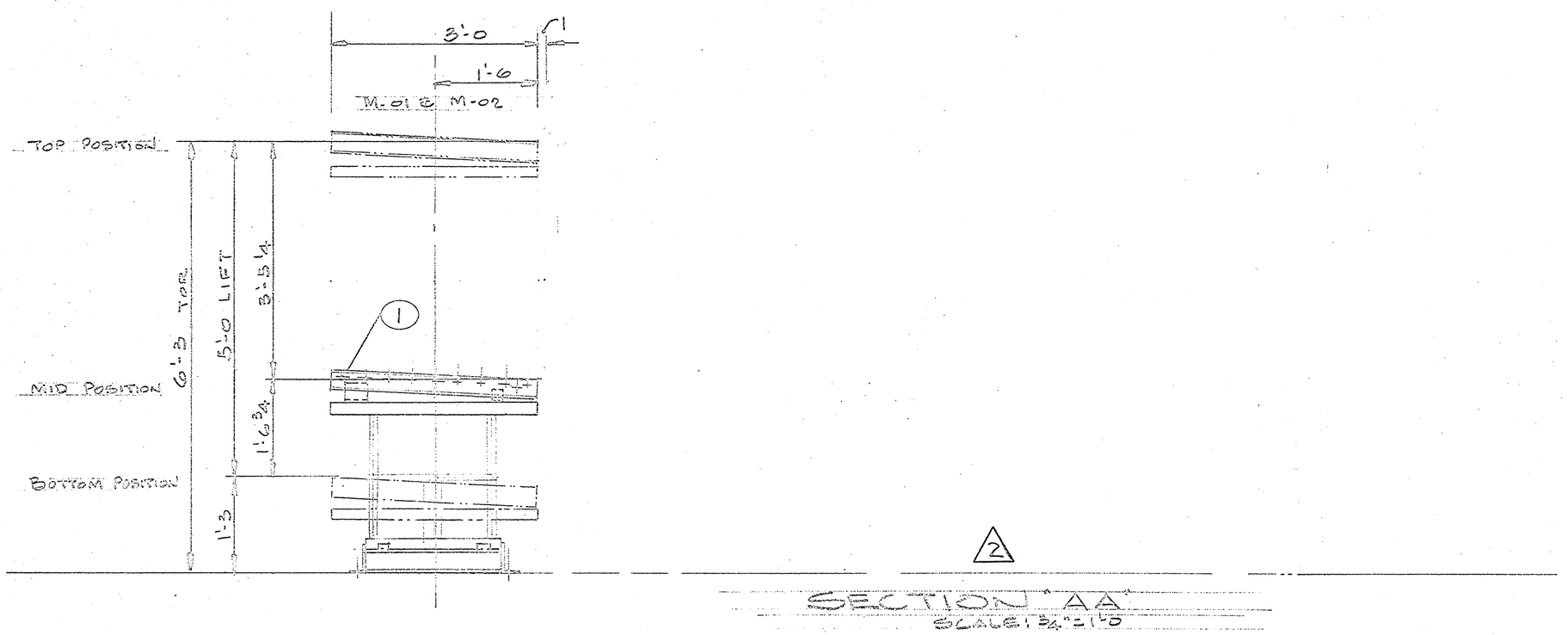

SECTION "AA"
SCALE: 3/4" = 1'-0

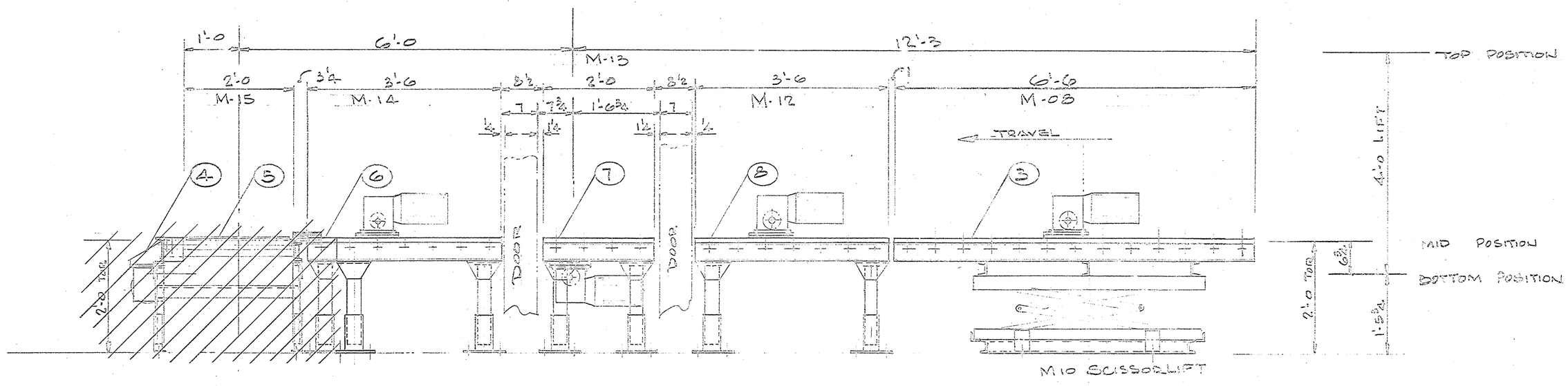

SECTION "BB"
SCALE: 3/4" = 1'-0

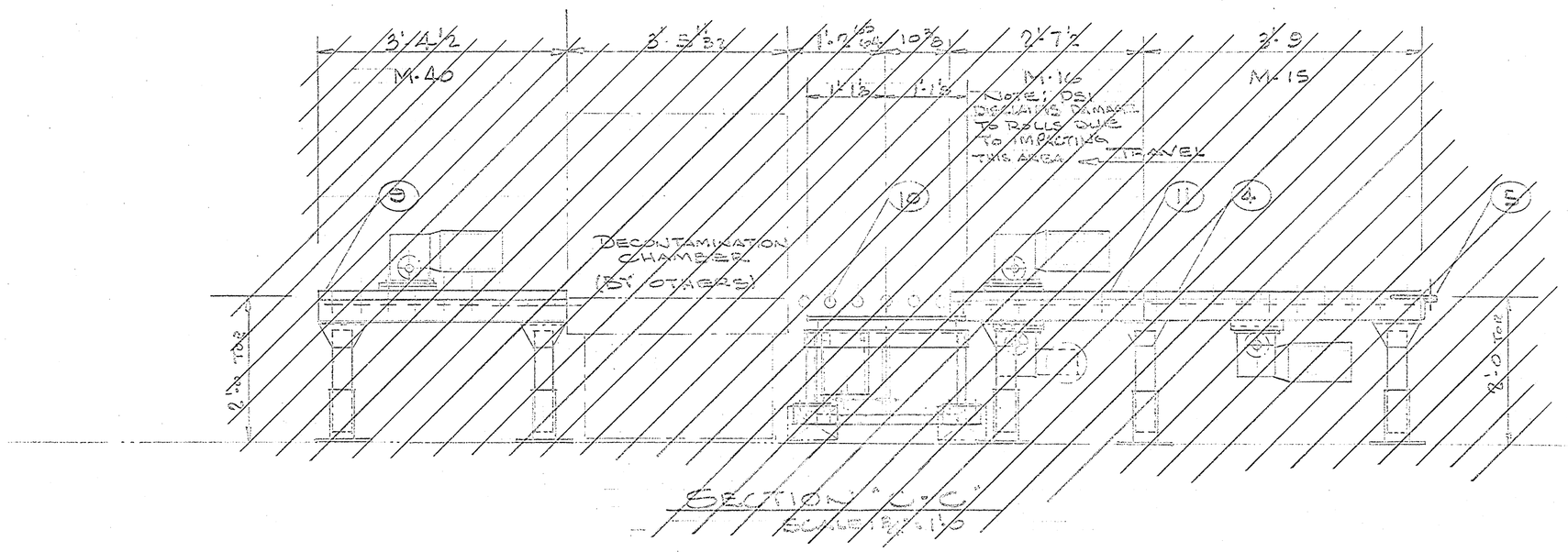

SECTION "CC"
SCALE: 3/4" = 1'-0

* DENOTES ITEMS TO BE SHIPPED AS A UNIT

*	MK'D	PCS.	LENGTH	DESCRIPTION	EXT.	REMARKS
	1	1		GRAVITY SECTION LIFT		"20L A"
	2	1		EMPT DRUM STORAGE RAC		"20SA"
	3	1		LIFT PLATFORM WITH CDLR		"20L A"
	4	1		CDLR CONVEYOR 3'-9 LG X		
			24" EFFECTIVE WIDTH WITH SUPPORTS			PO 6051
			2½" Ø #304 SS ROLLERS W/ H.D. FROST			
			BEARINGS MOTOR MOUNTED TOPSIDE			
			WITH 40 FPM DRIVE W/#5 STERNS CLUTCH			
	5	1	DRUM CENTERING DEVICE			"20L A"
	6	1	CDLR CONVEYOR 5'-10 LG X			
			24" EFFECTIVE WIDTH WITH SUPPORTS			PO 6051
			1.5" Ø #304 SS ROLLERS W/ 6 Ø			
			TURNWHEEL ~ MOTOR MOUNTED TOPSIDE			
			40 FPM			
	7	1	SAME AS ABOVE EXCEPT			PO 6051
			2'-0 LONG AND MOTOR MOUNTED			
			UNDERSIDE			
	8	1	SAME AS ASSY MK (6) EXCEPT			PO 6051
			3'-0 LG.			
	9	1	CDLR CONVEYOR 3'-4½" LG X			PO 6051
			24" EFFECTIVE WIDTH WITH SUPPORTS			
			2½" Ø SS ROLLERS W/ H.D. FROST BEARING			
			MOTOR MOUNTED TOPSIDE 40 FPM			
	10	1	SWIPE TABLE ASSY			"20L A"
	11	1	CDLR CONVEYOR 2'-7½ LG X			
			24" EFFECTIVE WIDTH WITH SUPPORTS			
			2½" Ø #304 SS ROLLERS SPECIAL			
			EXIT END ~ 40 FPM DRIVE MOUNTED			
			TOPSIDE ~ 1 FPM DRIVE MOUNTED			
			UNDERSIDE. #5 STERNS BOTH			
			SPROCKET CLUTCH BOTH DRIVES			

This certifies that conveyors comply with required code specs & proposal #B34150-2

Carl Lewis & Assy
03/28/85

WVNS APPROVAL

COG. MGR. [illegible] 7/2/86
COG. ENGR. A.L. Nason 6/27/86
DRFT. SUPR. [illegible] 7/2/86
Q.A. [illegible] 7/2/86

WVNS P.O. 05838

VERIFY ALL DOCUMENTS FOR CURRENT REVISION AND PENDING CHANGES PRIOR TO EACH USE
INIT _____ DATE _____

PSI PRODUCTION SYSTEMS INC
1375 WHITE CIRCLE
MARIETTA, GA. 30060

CUSTOMER: ASSOCIATED TECHNOLOGIES INC.
CHARLOTTE, N.C. REQ# P-12-501

SHIP TO: WEST VALLEY DEMONSTRATION UNIT

SUBJECT: ELEVATION OF DRUM S[illegible]

MK'D REQ'D

CUST. P.O. _____ PROP. NO. _____ DR. BY SYM
DATE P.O. _____ FILE NO. _____ CK. BY _____

PSI JOB No. [illegible] SHEET NO. [illegible] REV. 2