VERIFY ALL DOCUMENTS FOR CURRENT REVISION AND PENDING CHANGES PRIOR TO EACH USE.
INIT_____ DATE_____

FIRST ANGLE PROJECTION. IF IN DOUBT ASK

7/8/91 J.M. MOD. REQUEST NO.910218	ITEM 5-1" DIA. WAS 0·984" DIA. ITEM 6-NOW WVNS DRG. NO. 900C-4428 WAS OUR DRG NO. C1806M IMPORTANT ASSEMBLY NOTES ADDED. 49·461" OVERALL HEIGHT WAS 49·488" 1½" NPT THREAD WAS 1½" NPS BALANCING NOTE ADDED.

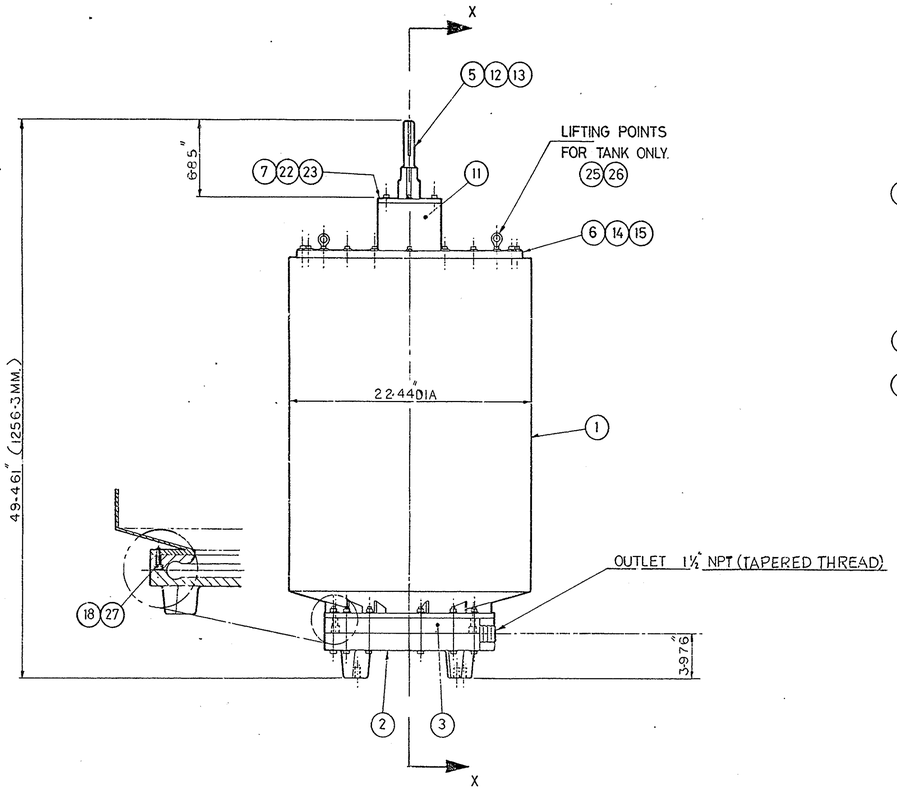

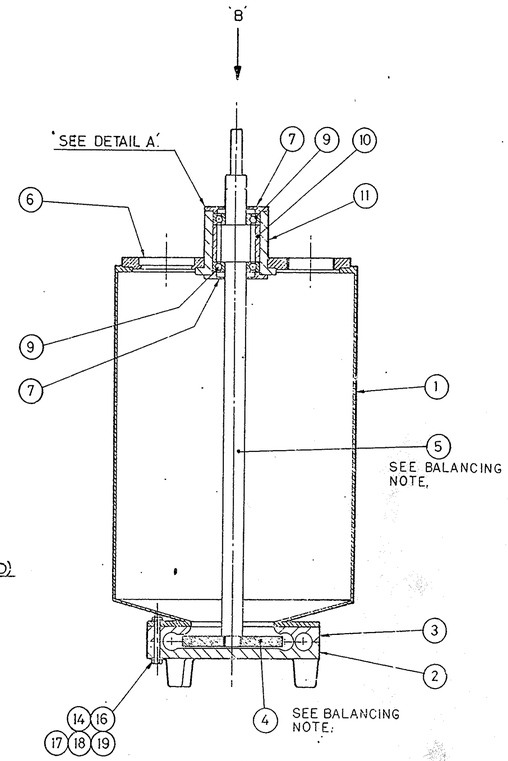

SECTION 'X-X'.

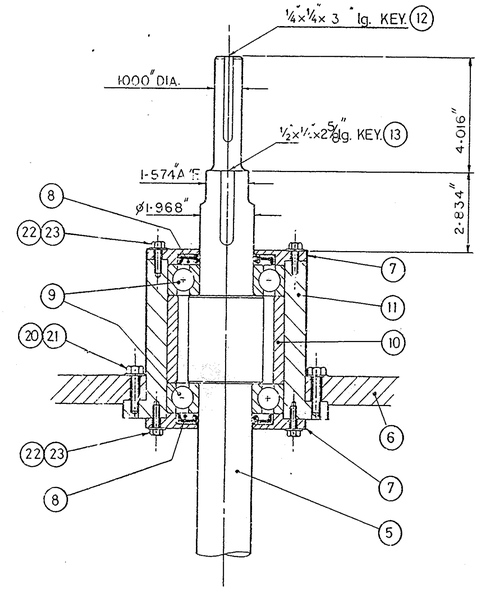

DETAIL "A"

NOTE.
IT IS IMPORTANT THAT ITEM 4 DISCAR AND ITEM 5 MIXER SHAFT ARE BALANCED TOGETHER PRIOR TO MAIN ASSEMBLY AND MARKED ACCORDINGLY.

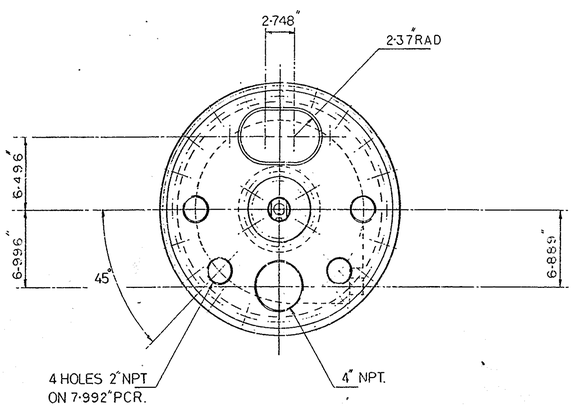

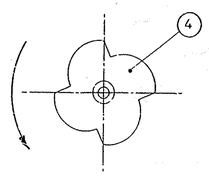

VIEW ON 'B'.

ANTI-CLOCKWISE ROTATION LOOKING ON END OF SHAFT.

WVNS APPROVAL

COG. MGR.	1-31-94
COG. ENGR.	1/17/94
DRFT. SUPR.	1/21/94
Q.A. APPVL.	1/17/94
SYS ENGR APPVL.	1/17/94

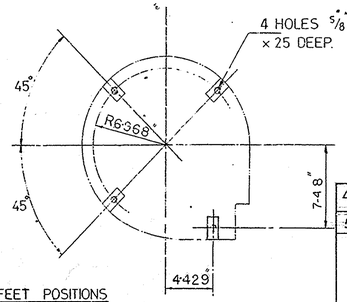

VIEW ON 'B': PLAN OF FEET POSITIONS

✳ IMPORTANT ASSEMBLY NOTES:-

TORQUE SETTINGS

½" UNC FASTENERS	65 lbf. ft.
⅜" UNC FASTENERS	35 lbf. ft.
5/16" UNC FASTENERS	20 lbf. ft.
¼" UNC FASTENERS	9 lbf. ft.

TORQUE SEQUENE FOR ASSEMBLY OF TOP PLATE (ITEM 6) TO MIXING TANK (ITEM 1) AS FOLLOWS:-
1. INITIALLY NIP ALL FASTENER (PRE-TIGHTENING).
2. TIGHTEN FASTENERS IN A DIAGONALLY OPPOSITE PATTERN TO THE APPROPRIATE ✳ TORQUE SETTING – 35 lbf. ft.

ITEM	DRG. No.	PART No.	DESCRIPTION	No OFF	MATL.	WT.
29						
28						
27			½" U.N.C. CAP HEAD SCREW 1½" LG	2	304 SS	
26			SHACKLE 1·5 TONNE.	2	304 SS	
25			LIFTING EYE ⅜" U.N.C. 1¼" LG	2	304 SS	
23			¼" U.N.C. BOLT ¾" LG	12	304 SS	
22			¼" SHAKEPROOF WASHER.	12	304 SS	
21			5/16" U.N.C. 1⅜" LG	6	304 SS	
20			5/16" SHAKEPROOF WASHER	6	304 SS	
19			½" U.N.C. BOLT 4" LG	12	304 SS	
18			½" SHAKEPROOF WASHER.	14	304 SS	
17			½" U.N.C. NYLOC NUT	12	304 SS	
16			⅜" U.N.C. BOLT 3" LG	3	304 SS	
15			⅜" U.N.C. BOLT 1½" LG	20	304 SS	
14			⅜" SHAKEPROOF WASHER.	23	304 SS	
13			½" x ½" x 2⅝" lg. KEY.	1	KEY STL	
12			¼" x ¼" x 3" lg. KEY.	1	KEY STL	
11	C1745-M		BEARING HOUSING	1	304SS	
10	A1688-M		BEARING SPACER.	1	304SS	
9			BEARING. SKF 6310 – 2RS – C3.	2	—	
8			SEAL. W35419639 R4	2	—	
7	B1183-M		END CAP.	2	304SS	
6	900C-1325		TOP PLATE. (WVNS DRG. NO.)	1	304SS	
5	C1744-M		MIXER SHAFT.	1	304SS	
4	B1180-M		DISCAR.	1	NIHARD	
3	D1663-M		UPPER CASTING.	1	MEEHANITE	
2	D1664-M		BOTTOM CASTING.	1	MEEHANITE	
1	D1669-M		MIXING TANK.	1	304SS	

PARTS LIST

4	REV/ECN 6893 10-1-93	PD	DRS
5	REV/ECN 7340 12-21-93	GW	DRS

	MODIFICATIONS	
02	TOP PLATE & BEARING HOUSING MODIFIED. S.S. CONSTRUCTION	
0	ER 1310	3/31/93
1	REVISED PER ECN 2534	
2	REVISED PER ECN 7-3[illegible]	
3	REV/ECN 4575 REPLACES TR'G SAME NO REV 2	

ALL DIMENSIONS IN MILLIMETRES (mm) UNLESS OTHERWISE STATED. DECIMAL DIMENSIONS TO TWO PLACES OF DECIMAL TO COME WITHIN ±0·03 mm. ALL OTHER DIMENSIONS TO COME WITHIN ±0·2 mm. PATTERNS, FORGINGS AND FABRICATIONS TO HAVE ALLOWANCE FOR MACHINING WHERE MARKED ✓. REMOVE ALL BURRS AND SHARP EDGES.

COLCHESTER
GUN LANE, STROOD, ROCHESTER KENT.

APPROVAL.

IF IN DOUBT ASK – DO NOT SCALE!

EQUIPMENT OR ASSEMBLY USED ON.

THIS DRAWING AND THE INFORMATION IT CONTAINS ARE THE PROPERTY OF COLCHESTER LTD AND IT IS NOT TO BE COPIED OR LENT, WITHOUT THEIR PRIOR PERMISSION.

SCALE(S) 1:5 & 1:2.

FIRST ANGLE PROJECTION

TITLE. G.A. OF HIGH SHEAR MIXER Mk. IV.

DRAWN BY. J.M.M.

CHECKED BY. P.H.

DATE. 5-8-86

DRAWING No. D-1670-M REV 5