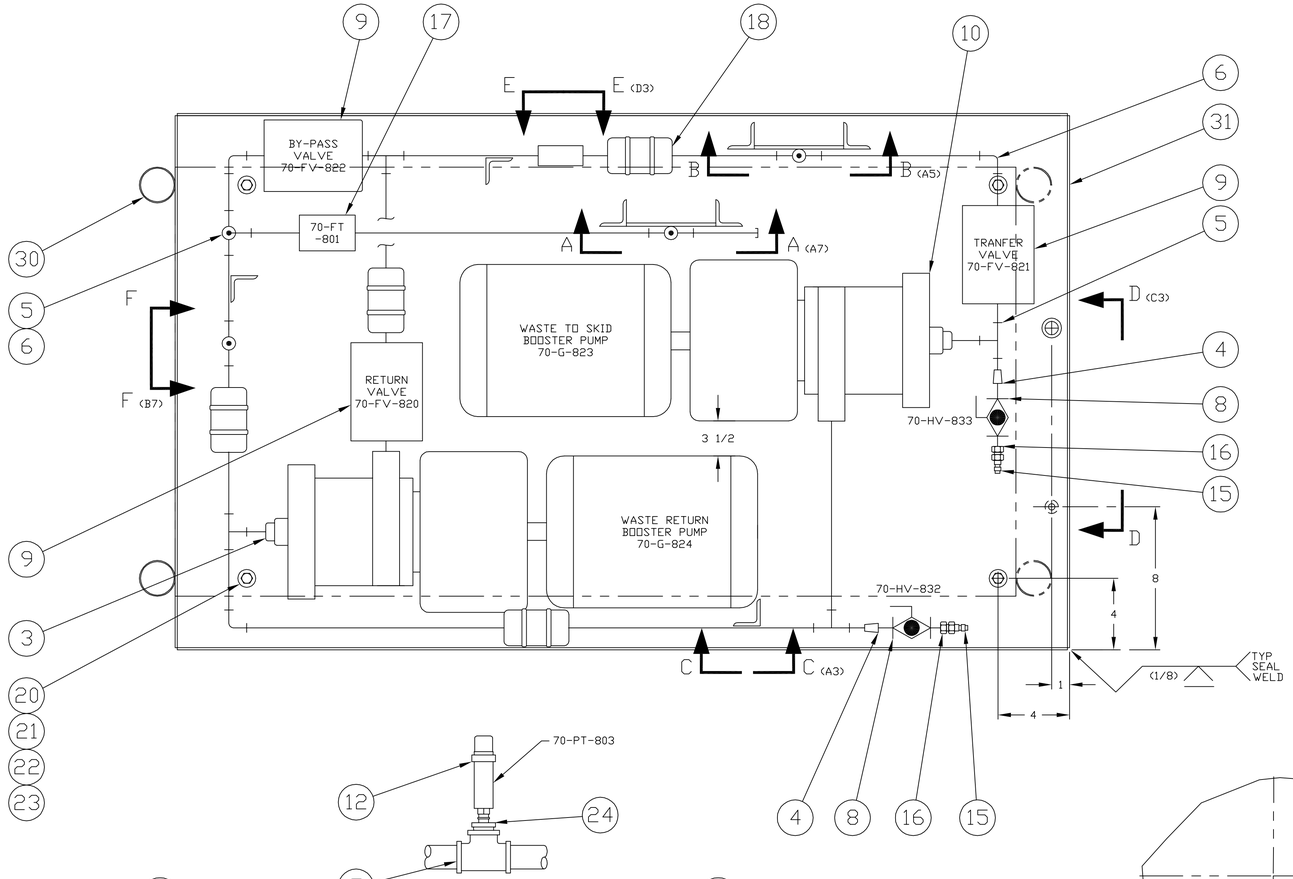

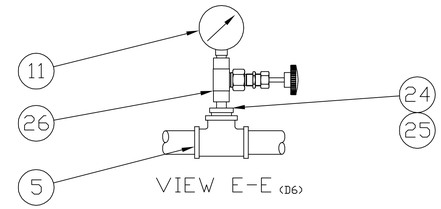

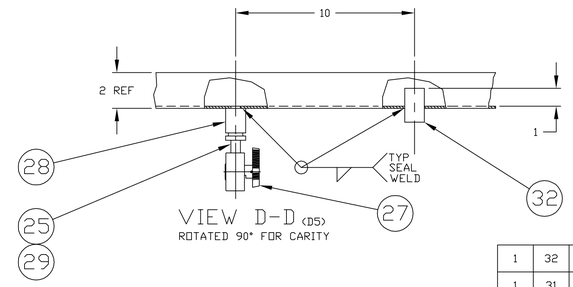

NOTES:

1 ALL PIPE SHALL BE 1" SCH40S UNLESS OTHERWISE NOTED
2 ITEM SHOWN IN TOP VIEW ONLY (PHANTOM) FOR CLARITY
3 ALL THREADS TO BE SEALED WITH LOCTITE PST #58031 NUCLEAR GRADE PIPE SEALANT

REFERENCE DRAWING:

912-D-0562 SODIOUM BEARING WASTE TRANSFER SYSTEM 70-CP-805 CONTROL PANEL

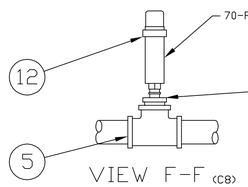

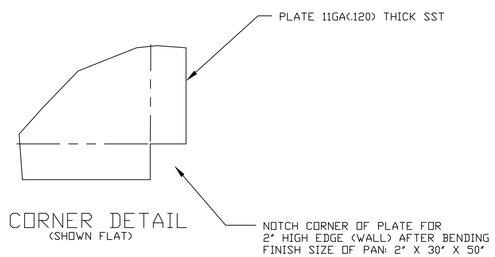

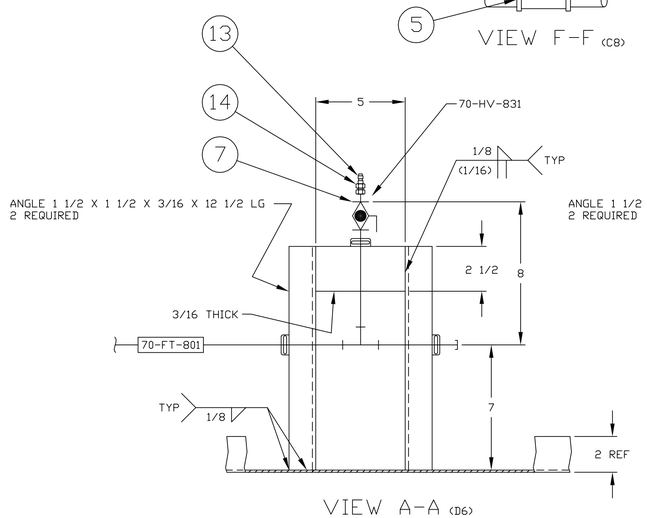

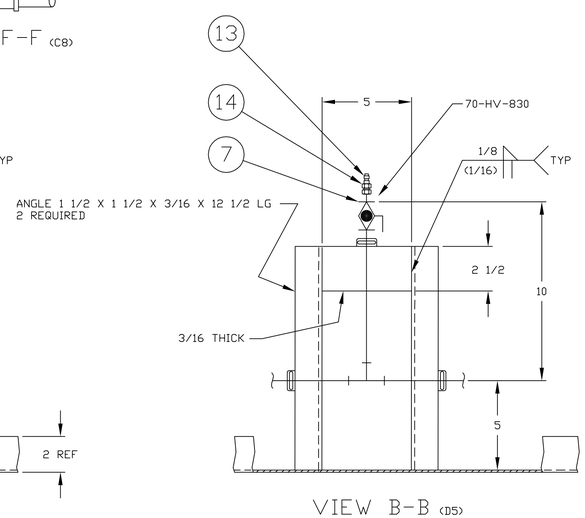

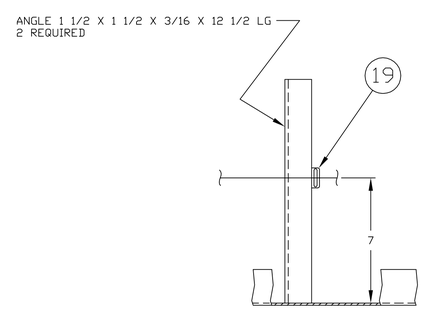

QTY REQD	ITEM #	NOMENCLATURE OR DESCRIPTION	PART OR IDENTIFYING #	MAT'L OR SPEC
1	32	THREADED FEMALE COUPLING 1/2" NPT	45525K564	McMASTER-CARR
1	31	DRIP PAN (FINISH SIZE 2" X 30" X 50")	912-D-0561H01	SST 11GA(.120) 36" X 54"
1	30	TRUCK PLATFROM 24" X 48" DECK 1600# CAPACITY	3BE78	GRAINGER NOTE 2
1	29	HEX HD BUSHING 1/2" X 1/4"		SST
2	28	COUPLING 1/2"		SST
1	27	PLUG VALVE 1/4" FEMALE NPT	SS-4P6T4	SWAGELOK
1	26	UNION BONNET METERING VALVE 1/4" FEMALE NPT	SS-31RF4	SWAGELOK
2	25	CLOSED NIPPLE 1/4"		SST
1	24	HEX HD BUSHING 1" X 1/4"		SST
4	23	LOCK WASHER 3/8 REGULAR		18-8
4	22	PLAIN WASHER 3/8, TYPE B, REGULAR		18-8
4	21	HEX NUT 3/8-16UNC		18-8
4	20	HEX HD BOLT 3/8-16UNC X 1 1/4 LG		18-8
9	19	RIGHT-ANGLE PIPE CLAMP 1"	29585T3	McMASTER-CARR
4	18	COMPRESSION PIPE COUPLING 300# 1"	4486K13	McMASTER-CARR
1	17	GPI FLOWMETER 1" FPT	G2S10N09MA	COLE PARMER
2	16	STRAIGHT-THROUGH PLUG MALE END CONNECTION 1/2" MPT	4-S25	HANSEN
2	15	STRAIGHT-THROUGH PLUG FEMALE END CONNECTION 1/2" FPT	B4-T26	HANSEN
2	14	STRAIGHT-THROUGH SOCKET MALE END CONNECTION 1/2" MPT	8-S35	HANSEN
2	13	STRAIGHT-THROUGH PLUG FEMALE END CONNECTION	B8-T36	HANSEN
1	12	CVD PRESSURE TRANSDUCER 0-150 PSIG	2600BGG1502G3UB	GEMS SENSORS
1	11	PRESSURE GAUGE 0-100 PSI	PGC-20L-100	OMEGA
2	10	PUMP 50GPM @ 132 FT TDH SST 480 3PH 5HP	CMH2-ASNFEYSS	ISOCHEM
3	9	ELECTRICAL BALL VAVLE 1" 120VAC	9933-FTTS-100-DM W/ER1	MARWIN
2	8	BALL VALVE 1/2", FNPT, REINFORCED PTFE SEAT	SS-63TF8	SWAGELOK
2	7	BALL VALVE 1", FNPT REINFORCED PTFE SEAT	SS-65TF16	SWAGELOK
4	6	ELBOW 90° 1" 150#		SST
8	5	TEE 1" 150#		SST
2	4	REDUCING BUSHING 1" X 1/2"		SST
2	3	REDUCING BUSHING 1 1/4" X 1"		SST
1	2	REDUCING BUSHING 1" X 1/4"		SST
	1	PUMP AND CART EQUIPMENT ASSEMBLY	912-D-0561G01	

G01 PARTS LIST

AS BUILT

REVISIONS

REV	DESCRIPTION	APV'D
0	ER 25937 8/13/2004	CCG

VERIFY ALL DOCUMENTS FOR CURRENT REVISION AND PENDING CHANGES PRIOR TO EACH USE
INIT _____ DATE _____

UNLESS OTHERWISE SPECIFIED ALL DIMENSIONS IN INCHES
MACHINED SURFACES FLATNESS .003 FINISH 125√
TOLERANCES FRACTION ±1/16 2 PLACE ±.01 ANGLE ±0°30' 3 PLACE ±.005
FILE NAME 912-D-0561_001_000
PLOT SCALE 1=4
D SPEC # 25937
NEXT ASSEMBLY

DRAFTER H. BARKER DATE 06/01/2004
CHECKER DATE
ENGINEER J. CRUMLISH DATE 8/13/2004

WVNSCO
West Valley Nuclear Services Company

SODIUM BEARING WASTE TRANSFER SYSTEM
PUMP AND EQUIPMENT CART ASSEMBLY

DATABASE LINKED DRAWING. SEE ENGINEERING RELEASE FORM (ER) FOR DRAWING APPROVAL SIGNATURES.
DWG SIZE D
SCALE NONE
WEIGHT
A/E DWG #
A/E CONTRACT #
DWG # 912-D-0561 REV 0
SHEET 1 OF 1
CODE IDENT #

CAD DRAWING-DO NOT REVISE THIS ORIGINAL