VERIFY ALL DOCUMENTS FOR CURRENT REVISION AND PENDING CHANGES PRIOR TO EACH USE.
INIT_____ DATE_____

NO.	DATE	REVISION	DR	CH	APPROVED		
1	7-20-84	FOR CONSTRUCTION					
2	8-20-84	REVISED TO SPECIFICATION	DJS				
3	8-30-84	REV. TO D.F.C. LOG No 087	RBH		PMD		
4	12-19-84	REV. TO DFC No 135	RBH		MLK		

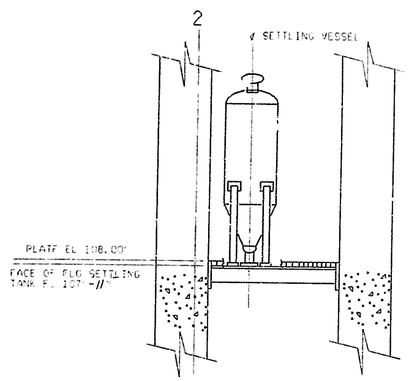

SECTION B
901-C-031
(D2)

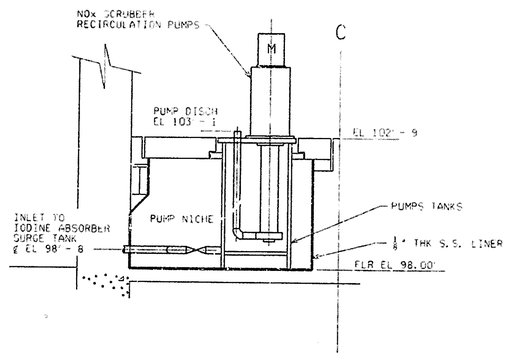

SECTION D
901-C-030
(K1)

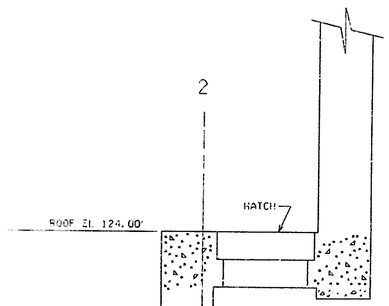

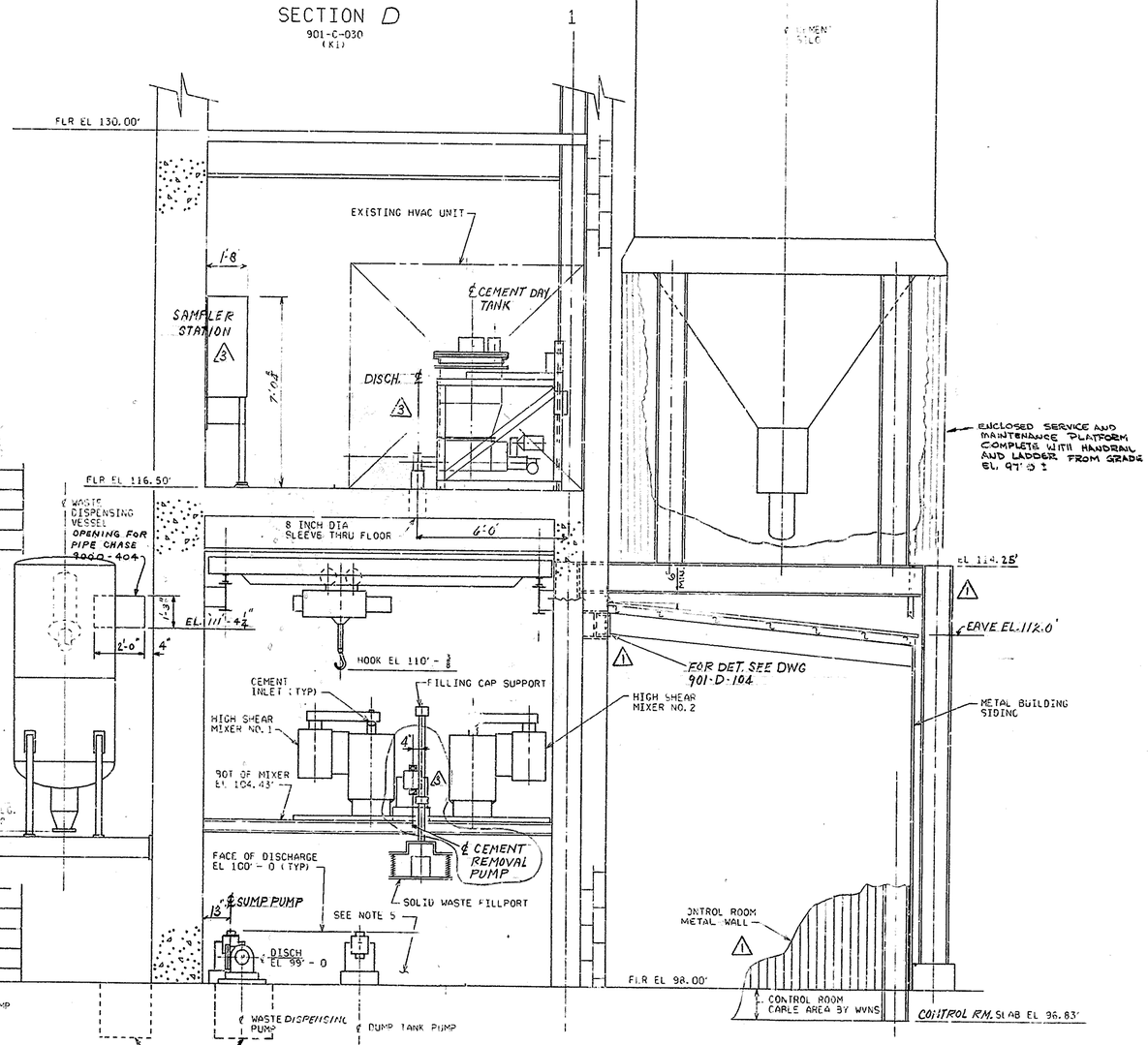

SECTION A-A
901-C-030 (E1)
901-C-031 (E1)

NOTES

FOR NOTES AND REFERENCE DRAWINGS SEE DWG 901-C-030.

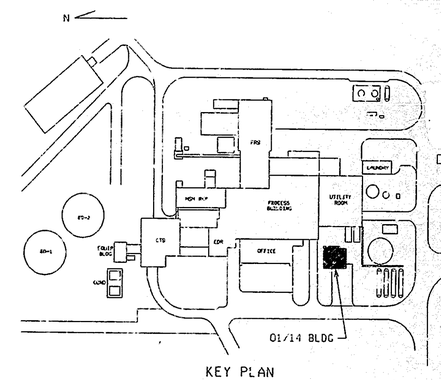

KEY PLAN

1 0 4 8F 3/8" = 1'-0

REV. B. 11-15-84

FOR DRAWING INDEX SEE DRAWING NO. 900-D-362

APPRVD WVNS CO.	7/19/85	EBASCO SERVICES INCORPORATED
PROJECT MGR	7/5/84	A/E O.F.S. NO. 2388 TASK ORDER 007
ENGINEER SUPV.	7/5/84	FOR WEST VALLEY NUCLEAR SERVICES COMPANY, INC WEST VALLEY, NEW YORK
LEAD DISC/ENGR	7/5/84	WEST VALLEY DEMONSTRATION PROJECT
DESIGN	7/5/84	GENERAL ARRANGEMENT 01/14 BUILDING SECTIONS CEMENT SOLIDIFICATION BUILDING
CHECKED	7/5/84	
DRAWN R. ALBERGO	DATE 7/5/84	
DE-AC07-81NE44139 PROJECT NO.		
19-CWV-02275 SUBCONTRACT NO.		
ISSUED FOR CONSTRUCTION	SCALE 3/8"=1'-0"	SPEC. CODES

SIZE	INDEX CODE NUMBER				DRAWING NO.	REV.
	AREA	DR. TYP	CL	ORIG		
D	350	05	70	01	901D-032	4B

A/E SHEET NO. 901-C-032 A

BASE LINED ON REV. NO. 2 DTD 8-20-84