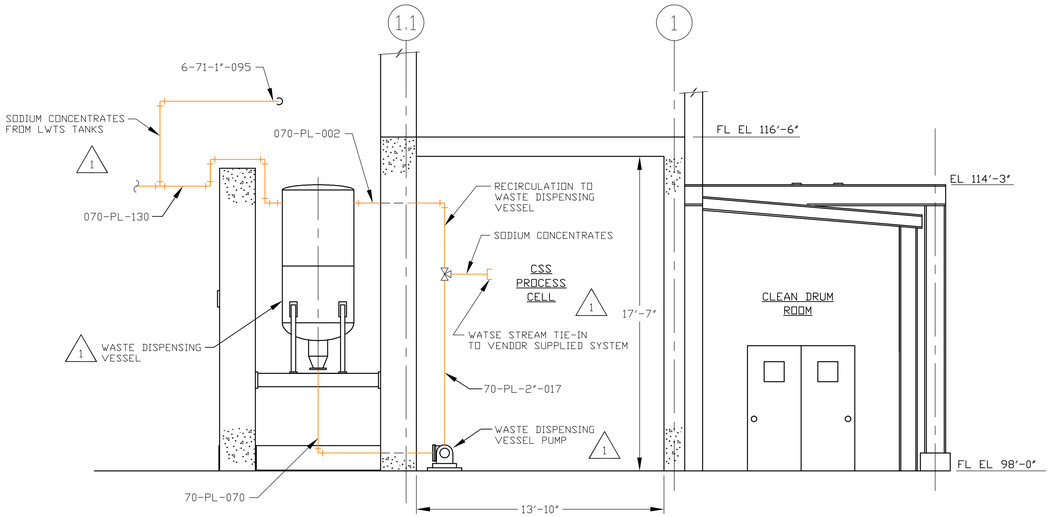

SECTION A-A SH1 (D6)

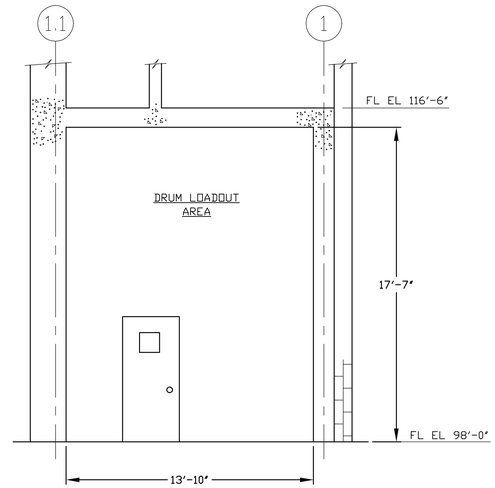

SECTION B-B SH1 (C5)

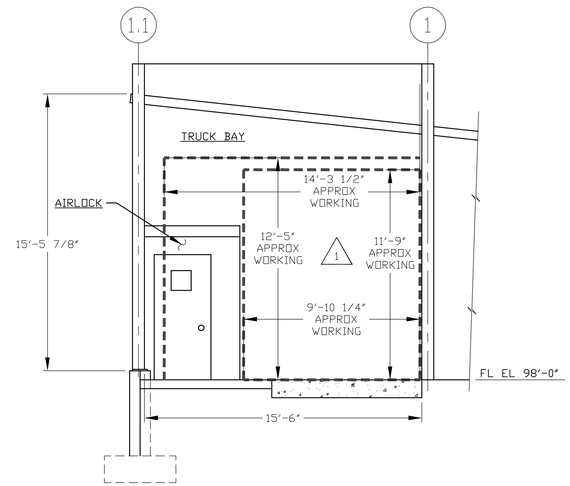

SECTION C-C SH1 (B4)

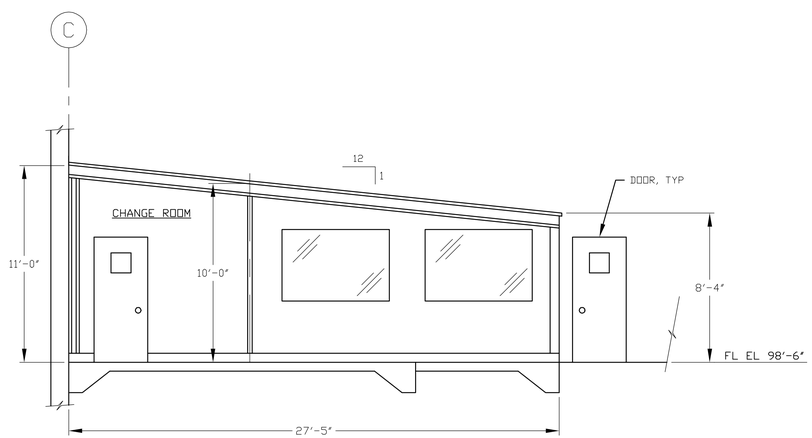

SECTION D-D SH1 (A5)

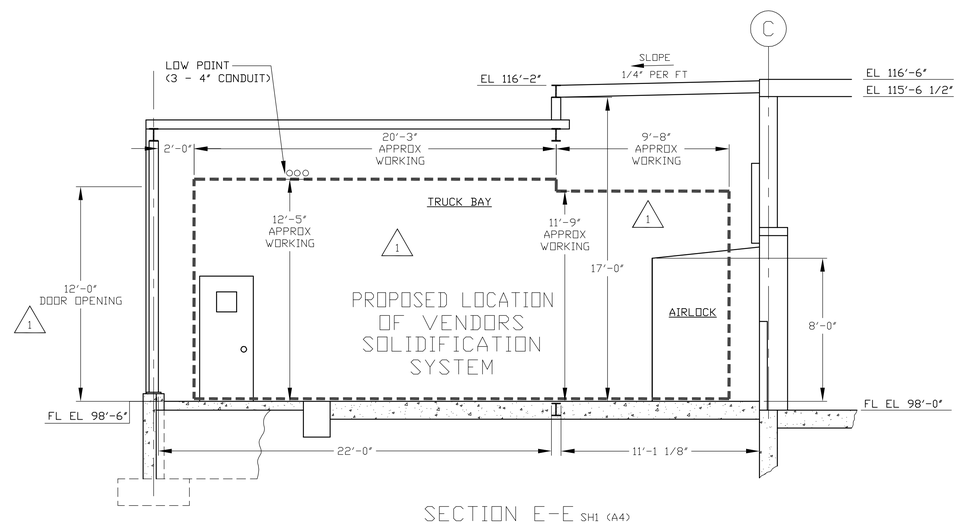

SECTION E-E SH1 (A4)

REVISIONS

REV	DESCRIPTION	APVD
0	ER 25526 3/20/2003	CCG
1	ECN 25539 DAK 4/8/2003	HAB

VERIFY ALL DOCUMENTS FOR CURRENT REVISION AND PENDING CHANGES PRIOR TO EACH USE
INIT _____ DATE _____

UNLESS OTHERWISE SPECIFIED ALL DIMENSIONS IN INCHES

FILE NAME 126566
PLOT SCALE 1=48.00
D SPEC # 25526
NEXT ASSEMBLY

DRAFTER L. OFFHAUS DATE 07/22/99
CHECKER DATE
ENGINEER B. VITKO DATE

DATABASE LINKED DRAWING.
SEE ENGINEERING RELEASE FORM (ER) FOR DRAWING APPROVAL SIGNATURES.

DWG SIZE D

WVNSCO
West Valley Nuclear Services Company

EXISTING 01-14 BUILDING CSS AREAS
GENERAL ARRANGEMENT
SECTIONS

SCALE 1/4"=1'-0"
WEIGHT
A/E DWG #
A/E CONTRACT #
DWG # 900-S-7942
REV 1
SHEET 2 OF
CODE IDENT #

CAD DRAWING-DO NOT REVISE THIS ORIGINAL