VERIFY ALL DOCUMENTS FOR CURRENT REVISION AND PENDING CHANGES PRIOR TO EACH USE.
INIT_____ DATE_____

REVISIONS				
ZONE	REV	DESCRIPTION	DATE	APPROVED
	0	ER 1087	7/3/87	

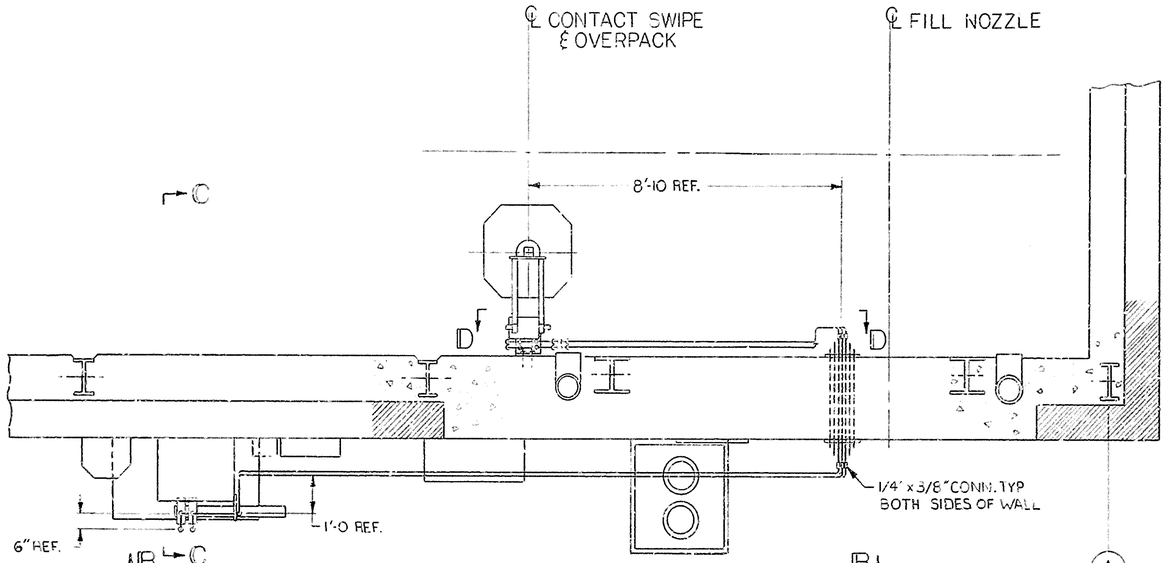

PLAN

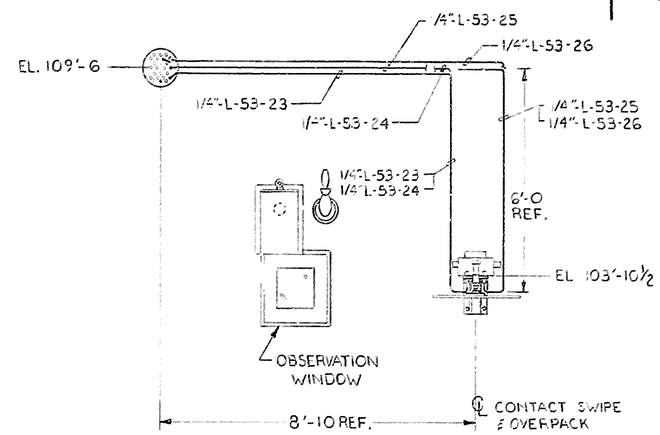

EL. 98'-0 FLOOR

VIEW D-D

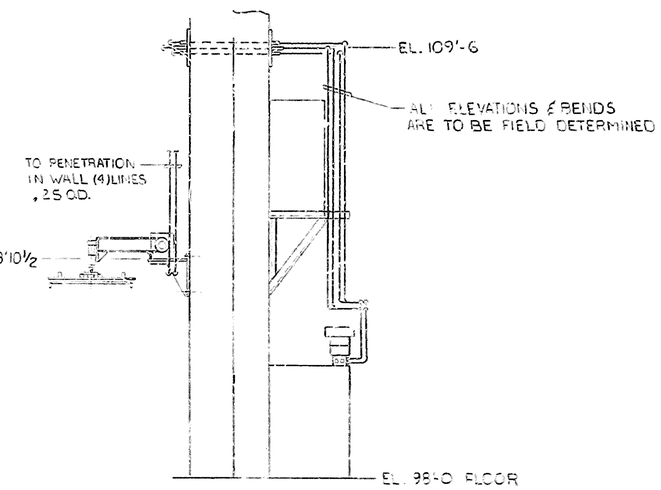

SECTION C-C

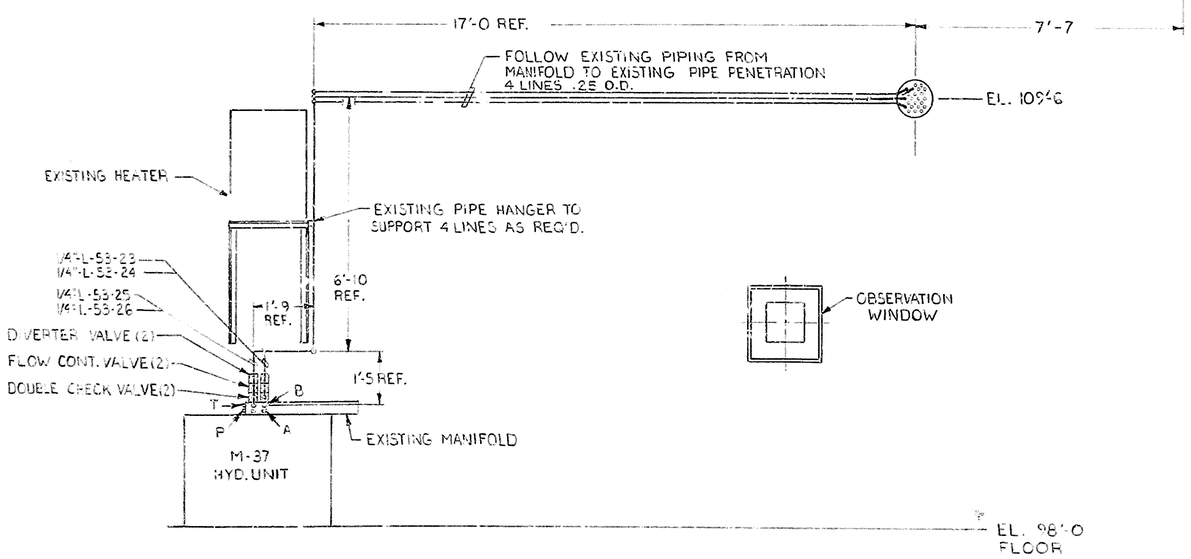

VIEW B-B

QTY REQD	SYM	ITEM NO	NOMENCLATURE OR DESCRIPTION	CODE IDENT NO	PART OR IDENTIFYING NO	MATERIAL	SPECIFICATION	ZONE

PARTS LIST

INDEX CODE NUMBER				UNLESS OTHERWISE SPECIFIED	CONTRACT NO	A/E CONTRACT NO	CODE IDENT NO
AREA	DWG TYPE	CL	ORIG.		DFTSPN --BER MEH	DATE OF DWG 6/26/87	FOR West Valley Nuclear Services Co., Inc. West Valley, New York
				TOLERANCES - DO NOT SCALE	CHECKER	DFTG SUPR	
SPEC CODE D-SPEC 1104				2PL DEC ± / 3PL DEC ± / ANGLES ± / AA	DESIGN	ENGR	C S S OVERPACK L D CLOSER HYDRAULIC PIPING/EQUIP. GEN. ARRGT.
				FRACTIONS ±			
					FACILITIES	Q.A.	DWG SIZE D / SCALE 1/2"=1'-0 / WEIGHT / DWG NO 900D-1320 / REV 0
					ENGR	E.S.O.S.	A/E DWG NO / SHEET 1 OF 1

REPRODUCIBLE