VERIFY ALL DOCUMENTS FOR CURRENT REVISION AND PENDING CHANGES PRIOR TO EACH USE.
INIT_____ DATE_____

900D-1745

DWG NO. 900D-1745 SH 1

REVISIONS				
ZONE	REV	DESCRIPTION	DATE	APPROVED
	0	ER10554	5/21/87	

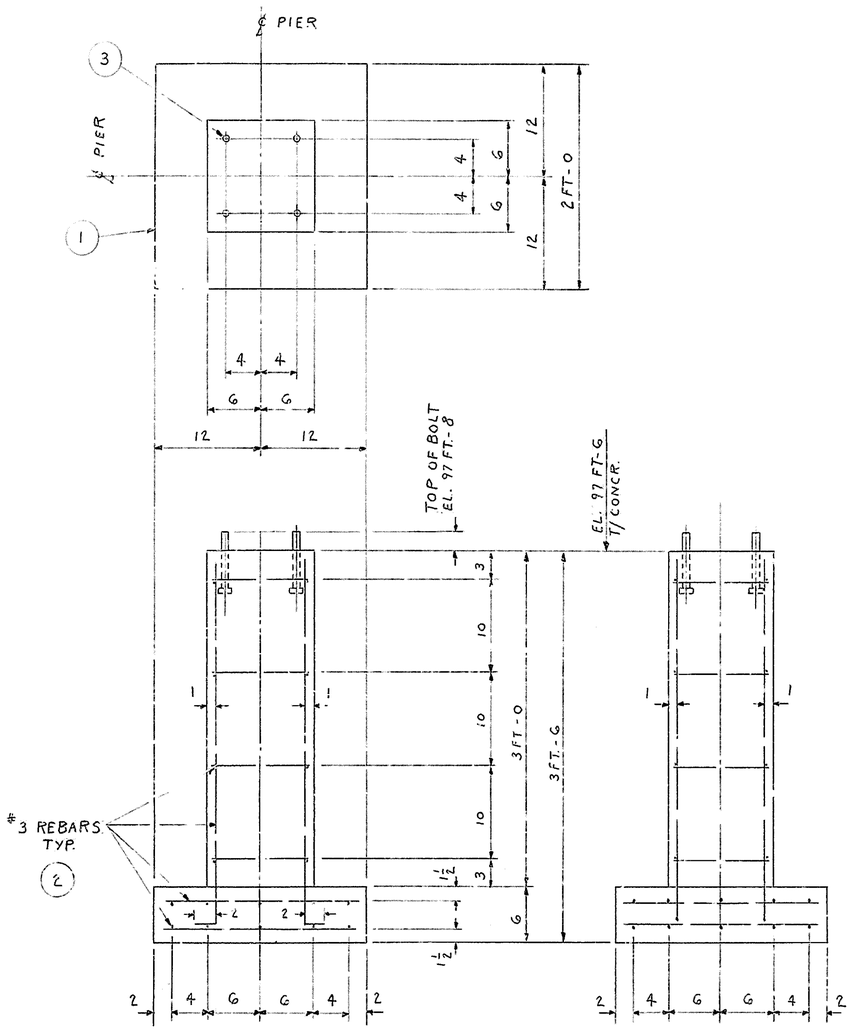

PIER - GROUP 1
SCALE: 1½" = 1 FT.-0

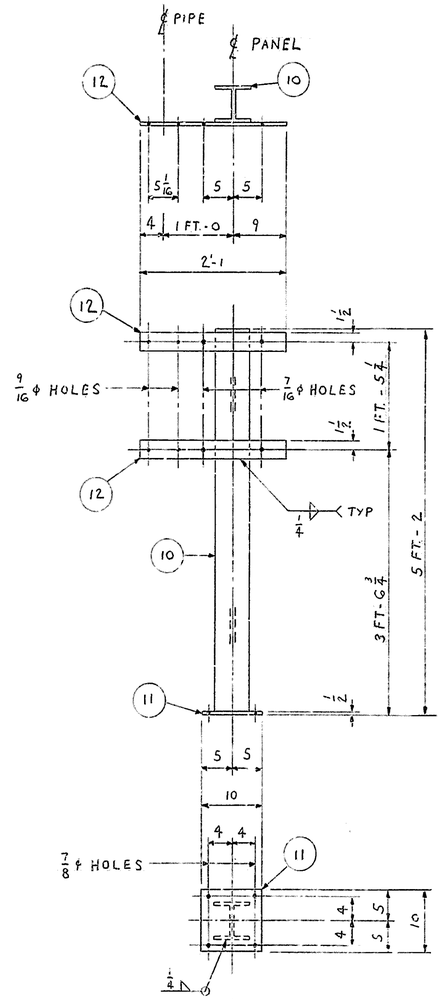

PANEL SUPPORT - GROUP 5
SCALE: 1" = 1 FT.-0

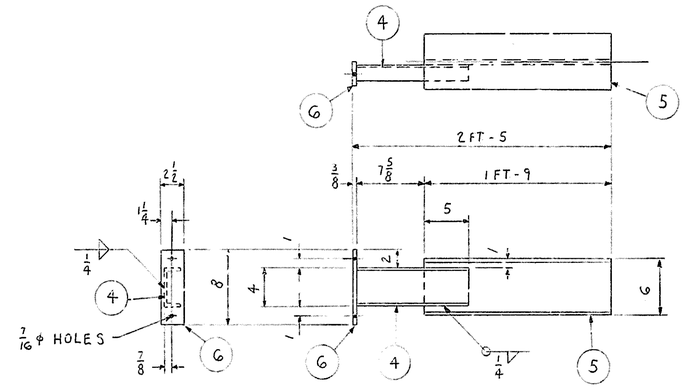

PIPE SUPPORT @ STA 7A & 9A - GROUP 3
SCALE: 1½" = 1 FT.-0

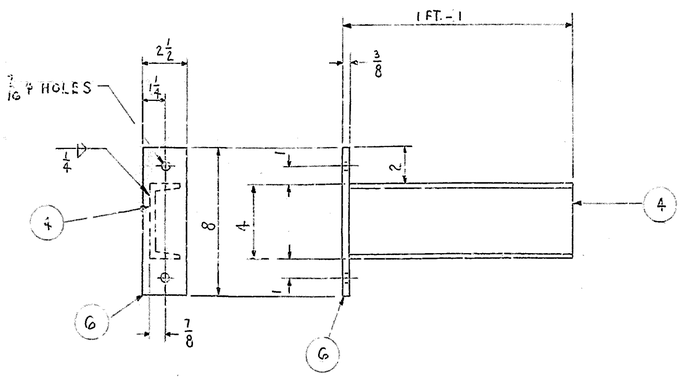

PIPE SUPPORT @ STA. 1-6 INCL., 8 & 9 - GROUP 2
SCALE: 3" = 1 FT.-0

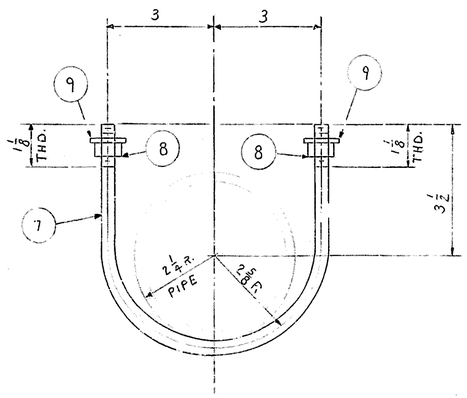

U-BOLT - GROUP 4
SCALE: 6" = 1 FT.-0

BAR SCALE

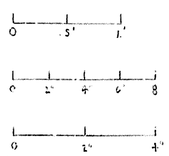

1½" = 1 FT.-0
3" = 1 FT.-0
6" = 1 FT.-0

QTY REQD	G05	G04	G03	G02	G01	ITEM NO.	NOMENCLATURE OR DESCRIPTION	PART OR IDENTIFYING NO.	MATERIAL OR SPEC
2						12	BAR 3 x 1/4	900D-1745 H09	ASTM A-36
1						11	R 1/2 x 10	900D-1745 H08	ASTM A-36
1						10	W6 x 15	900D-1745 H07	ASTM A-36
	2					9	3/8" ϕ FLAT WASHER		A307
	2					8	3/8" ϕ HVY. HEX NUT		A307
	1					7	ROD 1/8" ϕ x 1'-3" LG. (BENT)	900D-1745 H06	ASTM A-36
		1	1			6	BAR 2 1/2 x 3/8	900D-1745 H05	ASTM A-36
		1				5	W6 x 15	900D-1745 H04	ASTM A-36
		1	1			4	C4 x 7.25	900D-1745 H03	ASTM A-36
				4		3	3/4" ϕ x 6" LG. SQ. HD. BOLT		A307
					A/R	2	#3 REBARS	900D-1745 H02	ASTM A615
					A/R	1	CONCRETE	900D-1745 H01	ACI 318-77

PARTS LIST

UNLESS OTHERWISE SPECIFIED	DRAFTER WM. ZIMMERMAN	DATE 2-19-87	A/E CONTRACT NO. / CODE IDENT. NO.
ALL DIMENSIONS IN FT. & IN.	CHECKER	DATE 5/21/87	FOR West Valley Nuclear Services Co., Inc. West Valley, New York.
TOLERANCES - DO NOT SCALE	ENGR	DATE 5/21/87	
2 PL DEC ± / 3 PL DEC ± / ANGLES ±	AA		CSS-070-V-004 SILO TRUCK FILL LINE DETAILS
FRACTIONS ± 1/4	COG. MGR. APPVL	DATE 5/21/87	
D. SPEC. NO. 1076	E&OS APPVL N/A	DATE	
NEXT ASSEMBLY 900D-1744	Q.A. APPVL N/A	DATE	DWG SIZE D / SCALE NOTED / WEIGHT / DWG NO. 900D-1745 / REV 0
	DR'TG. SUPR.	DATE 5/21/87	A/E DWG NO. / SHEET 1 OF 1