VERIFY ALL DOCUMENTS FOR CURRENT REVISION AND PENDING CHANGES PRIOR TO EACH USE.
INIT_____ DATE_____

DWG NO 9000-1744 SH 1

REVISIONS				
ZONE	REV	DESCRIPTION	DATE	APPROVED
	0	ER 1054	5/21/87	
	1	REV. PER ECN. 1950 C. WRIGHT	9-23-87	

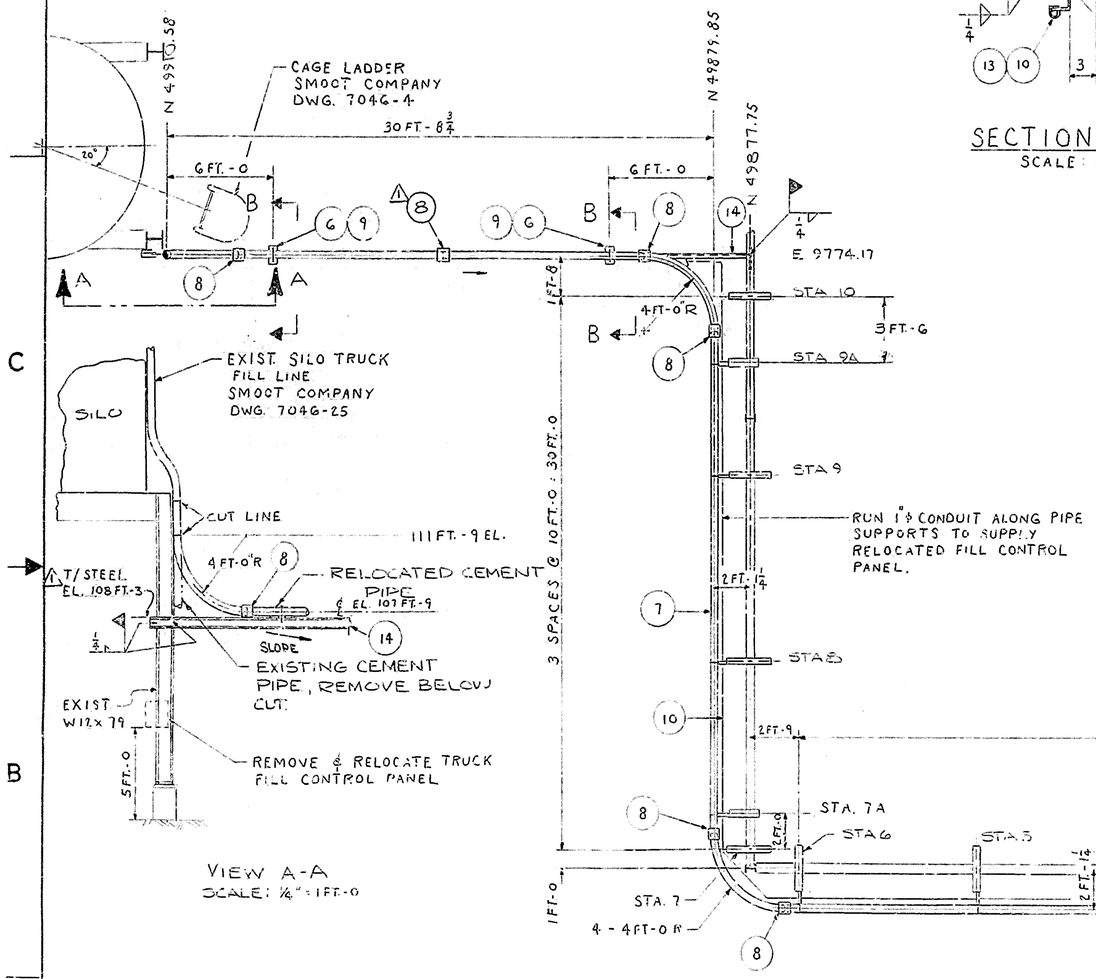

VIEW A-A
SCALE: 1/4" = 1 FT - 0

CEMENT TRUCK UNLOADING STATION
SCALE: 1/4" = 1 FT - 0

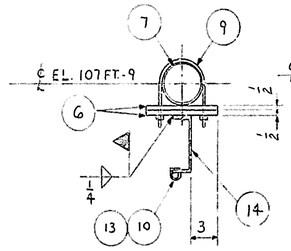

SECTION "B-B"
SCALE: 1 1/2" = 1 FT - 0

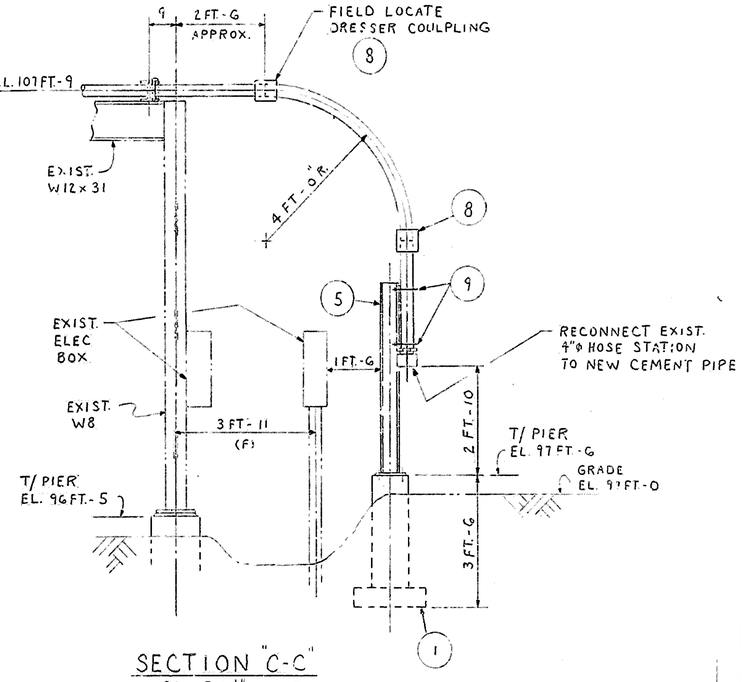

SECTION "C-C"
SCALE: 1/2" = 1 FT - 0

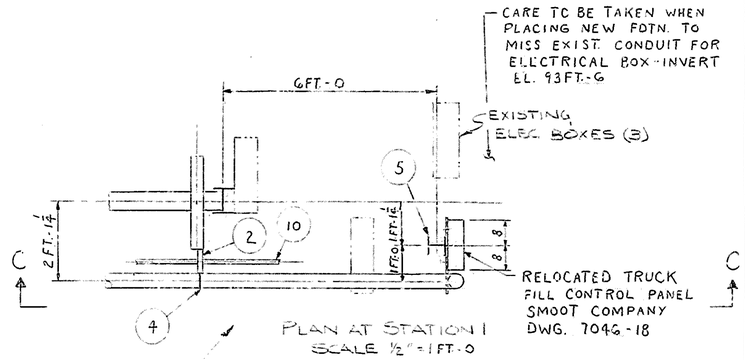

PLAN AT STATION 1
SCALE 1/2" = 1 FT - 0

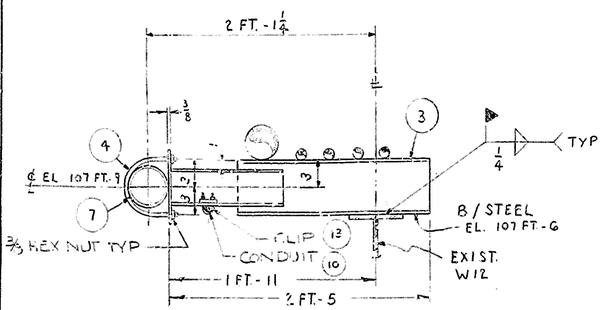

PIPE SUPPORT @ STA. 7A & 9A
SCALE: 1 1/2" = 1 FT - 0

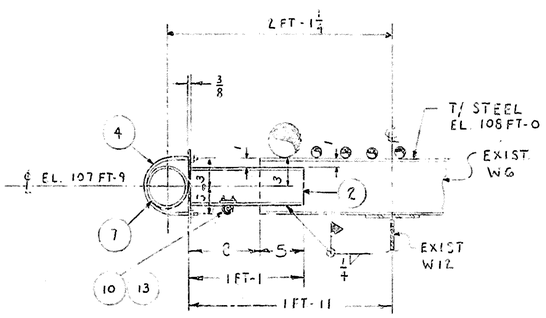

PIPE SUPPORT @ STA. 6, 8 & 9
SCALE: 1 1/2" = 1 FT - 0

1. FEE & MASON MFG. CO. MANASQUAN, N.J. 08736
2. HAVERSTOCK & CO. 560 56TH ST NIAGARA FALLS, N.Y.
3. CROUSE HINDS ELECTRICAL CONSTR MATLS. DIV. OF COOPER INDR. INC. WOLF & 7TH NORTH STREETS P.O. BOX 4999 SYRACUSE, N.Y. 13221-9983

BAR SCALE

0 2 4' 6' — 1/4" = 1 FT - 0
0 1' 2' 3' — 1/2" = 1 FT - 0
0 5' 10' — 1 1/2" = 1 FT - 0

QTY REQD	ITEM NO.	NOMENCLATURE OR DESCRIPTION	PART OR IDENTIFYING NO.	MATERIAL OR SPEC
A/R	14	C 6 x 10.5		ASTM A-36
A/R	13	1" ϕ CONDUIT BEAM CLIPS	MWS31	
A/R	12	1" ϕ CONDUIT 45° ELLS	EL3	
A/R	11	1" ϕ CONDUIT 90° ELLS	EL39	
A/R	10	1" ϕ ELECTRICAL CONDUIT		ASTM A-36
4	9	4" ϕ STD. U-BOLT	FIGURE 176	
8	8	4" ϕ STEEL COUPLING	DRESSER STYLE 38	
A/R	7	4" ϕ SCH 40 PIPE		
4	6	SUPPORT ⊏ 1/2 x 4 x 0' 8"	9000-1744 H01	ASTM A-36
1	5	PANEL SUPPORT	9000-1745 G05	
10	4	U-BOLT	9000-1745 G04	
2	3	PIPE SUPPORT	9000-1745 G03	
8	2	PIPE SUPPORT	9000-1745 G02	
1	1	PIER	9000 1745 G01	

PARTS LIST

UNLESS OTHERWISE SPECIFIED	DRAFTER WM. ZIMMERMAN	DATE 2-24-87	A/E CONTRACT NO. / CODE IDENT. NO.
ALL DIMENSIONS IN FT & IN.	CHECKER	DATE 5/21/87	FOR West Valley Nuclear Services Co., Inc. West Valley, New York
TOLERANCES - DO NOT SCALE	ENGR.	DATE 5/21/87	CSS-070-V-004 SILO TRUCK FILL LINE ARRGT. & SECTIONS
2 PL DEC / 3 PL DEC / ANGLES ± ± ± AA	COG. MGR. APPVL	DATE 5/21/87	
FRACTIONS ± 1/4	E&OS APPVL N/A	DATE	
D. SPEC. NO. 1076	Q.A. APPVL N/A	DATE	DWG SIZE D — SCALE NOTED — WEIGHT — DWG NO. 9000-1744 — REV 1
NEXT ASSEMBLY 9000-1745	OFTG. SUPR.	DATE 5/21/87	A/E DWG NO. — SHEET 1 OF 1