VERIFY ALL DOCUMENTS FOR CURRENT REVISION AND PENDING CHANGES PRIOR TO EACH USE.
INIT_____ DATE_____

DRAWING NUMBER

PLAN HOLD CORPORATION • IRVINE, CALIFORNIA
REORDER BY NUMBER 07SAR

DRAWING NUMBER

PLAN HOLD CORPORATION • IRVINE, CALIFORNIA
REORDER BY NUMBER 07SAR

DRAWING NUMBER
7046-4

PLAN HOLD CORPORATION • IRVINE, CALIFORNIA
REORDER BY NUMBER 07SAR

DRAWING NUMBER

PLAN HOLD CORPORATION • IRVINE, CALIFORNIA
REORDER BY NUMBER 07SAR

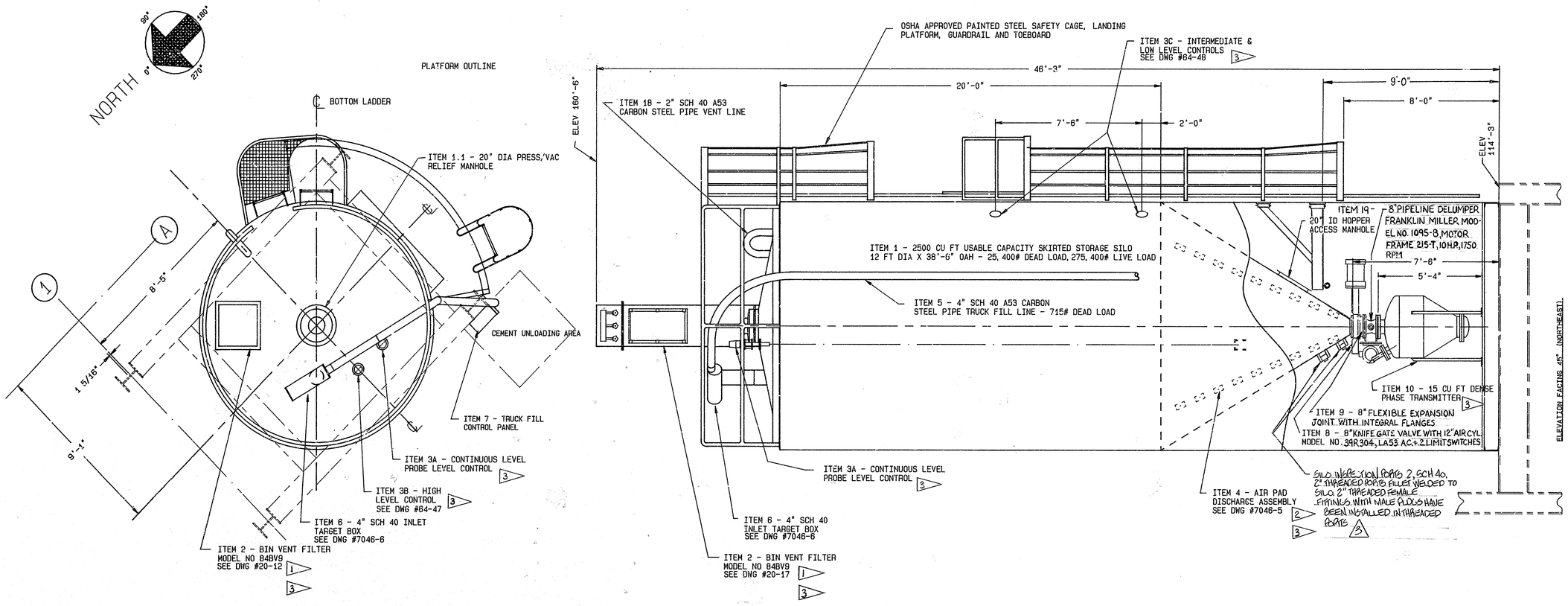

1. 100 PSI CLEAN, DRY & NON-LUBRICATED PLANT SUPPLY AIR REQUIRED. 5 SCFM @ 100 PSI.
2. 50 PSI CLEAN, DRY & NON-LUBRICATED PLANT SUPPLY AIR REQUIRED. 250 SCFM @ 3 PSI. 300 SCFM @ 5 PSI.
3. 1-60-115V CONTROL WIRING TO SMOOT CO. CONTROL PANEL REQUIRED.
4. EXTERIOR SURFACES TO BE SANDBLASTED, RECEIVE 1 COAT OF INORGANIC ZINC PRIMER & 1 COAT OF HIGH BUILD EPOXY, COLOR TO MATCH TNEMEC #1703 DARK YUMA. INTERNAL SURFACES WILL BE UNPAINTED.

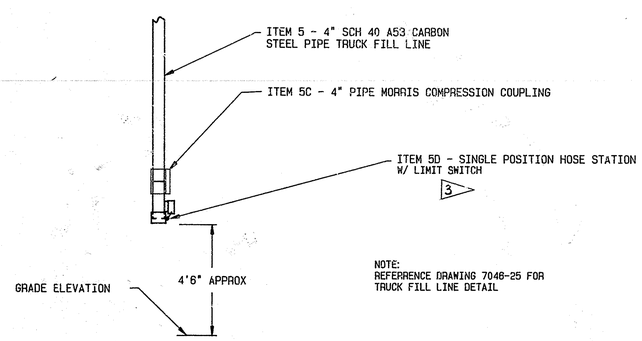

NOTE:
REFERENCE DRAWING 7046-25 FOR TRUCK FILL LINE DETAIL

DETAIL OF HOSE STATION AT GRADE ELEVATION

NO.	BY	DATE	REMARKS
3			
2			
1			
0	DWT	8FEB85	REVISED
A			ER 734
			REV ECN 2340
			REV ECN 1485
			REV ECN 2046

REVISION

Smoot Co.
KANSAS CITY, KANSAS

SILO ASSEMBLY
WVNS P.O. #19-FWV-06167

DATE 11-2-84
DWN. BY D. TOWNLEY
SCALE 3/8"=1'-0"
DWG. NO. 7046-4
APPROVED

WVNS APPROVAL

COG. MGR. 5/19/86
COG. ENGR. A.L. Nasol 5/19/86
DRFT. SUPR. 5/14/86
Q.A. 5/20/86