DRAWING NUMBER 900-D-397 SH. 1

DWG NO. 900D-397 SH 1

REVISIONS				
ZONE	REV	DESCRIPTION	DATE	APPROVED
	19	ECN 26111	10/07/04	
C3 B4	5	REVISED PER ECN 1638 EHB	5/15/87	RMP
A3 B4	6	REV'D PER ECN 1731	6-25-87	CTC RMP
C3	7	REV'D. PER ECN 1935 WCK	9-17-87	RMP
	8	REV'D PER ECN 2218 WCK	2-23-88	RMP 3/2/88

CONTINUED A8

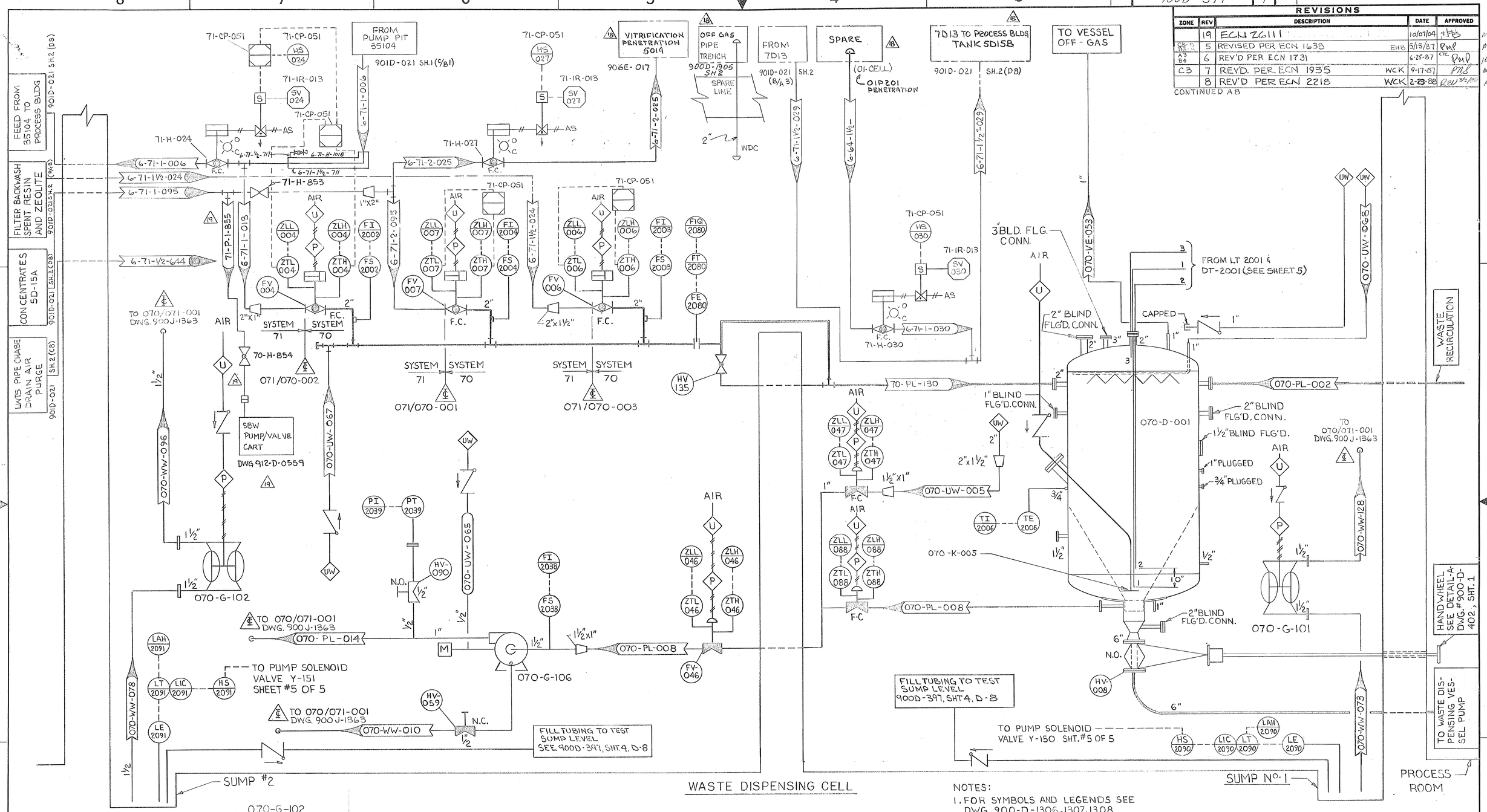

NOTES:
1. FOR SYMBOLS AND LEGENDS SEE DWG. 900-D-1306, 1307, 1308
2. ALL INSTRUMENTS, VALVES, ETC. DESIGNATIONS ARE PRECEEDED BY 070 (SYSTEM) NOT SHOWN FOR CLARITY

070-G-102
SUMP PUMP #2
SAME TYPE OF PUMP AS SUMP PUMP #1

070-G-106
DEWATERING PUMP
GOULD MODEL 3196 ST
1½ x 1-8, 20 G.P.M., 50' T.D.H.,
1½ H.P.-1750 R.P.M., 3PH.,
60 HZ., 460 VOLT

070-D-001
WASTE DISPENSING VESSEL
M.O.C.-T-304 STAINLESS STEEL
48" DIA. x 7'-5" STRAIGHT HEIGHT
DISHED HEAD TOP AND CONE
BOTTOM WITH JACKET. REFER
TO DWG. # 900-D-520

070-G-101
SUMP PUMP #1
WARREN-RUPP MODEL No.
SB 1½-A TYPE 4 DIAPHRAGM
TYPE, 1½ SUCTION & DISCHARGE

070-K-005
WDV AIR SPARGE
½" SCH 80 TP 316 SS
PER DWG. 900-C-1864

ZONE	REV	DESCRIPTION	DATE	APPROVED
	18	REV PER ECN 6310 GW	5-8-93	LRB RWM
	17	REV/ECN 4650 RMS	10/25/91	DRS DJR
	16	REV; ECN 4294-441	6-5-91	DRS
	15	REV/ECN 4142 RMS	1-25-91	LRB
A4	14	REVISED PER ECN 3170	12-10-89	LR DRS
	13	REVISED PER ECN 2786, 2916	2-17-89	LRK
	12	REVISED PER ECN 2701	11-11-88	CM
A4	11	REVISED PER ECN 2635	9/22/88	EHB
	10	REVISE PER ECN 2345	4-27-88	RW 5/13/88
B3-8 C8	9	REV'D PER ECN 2268	3-3-88	CTC DJR

QTY REQD	ITEM NO.	NOMENCLATURE OR DESCRIPTION	PART OR IDENTIFYING NO.	MATERIAL OR SPEC

PARTS LIST

UNLESS OTHERWISE SPECIFIED	DRAFTER C. HABERMEHL	DATE 1-9-87	A/E CONTRACT NO. / CODE IDENT. NO.
	CHECKER P. PETRONE	DATE 8/5/86	FOR West Valley Nuclear Services Co., Inc. West Valley, New York
TOLERANCES—DO NOT SCALE	ENGR. P. PETRONE	DATE 8/5/86	
2 PL DEC ± / 3 PL DEC ± / ANGLES ± / AA	FACILITIES M.F. SALISBURY	5/1/85	CSS SYSTEM 070 PROCESS & INSTRUMENTATION DIAGRAM
FRACTIONS ±	COG. MGR. APPVL J.C. CWYNAR	DATE 4/24/85	
D. SPEC. NO.	E&OS APPVL R. KEEL	DATE 4/22/85	
NEXT ASSEMBLY	Q.A. APPVL A.E. BAKER	DATE 5/85	DWG SIZE D / SCALE NONE / WEIGHT NONE / DWG NO. 900D-397 / REV 19
	DFTG. SUPR. D.H. GARLAND	DATE 4-24-85	A/E DWG NO. / SHEET 1 OF 5

REPROCRAFT 52107