VERIFY ALL DOCUMENTS FOR CURRENT REVISION AND PENDING CHANGES PRIOR TO EACH USE.
INIT_____ DATE_____

REVISIONS				
ZONE	REV	DESCRIPTION	DATE	APPROVED
	0	ER 863	9/19/86	JPG
	1	REV'D. PER ECN# 2677 DRS	10/29/88	JPMB

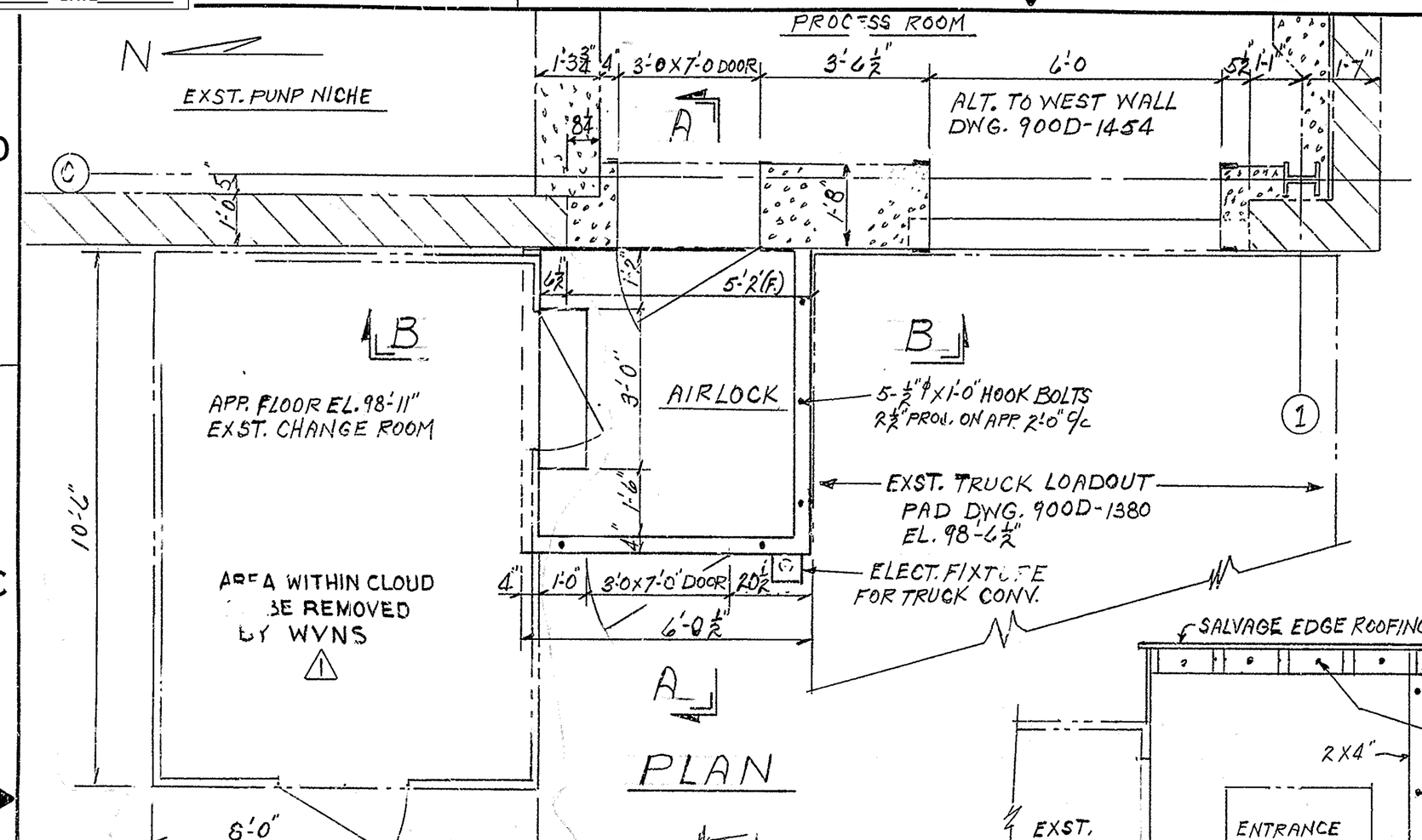

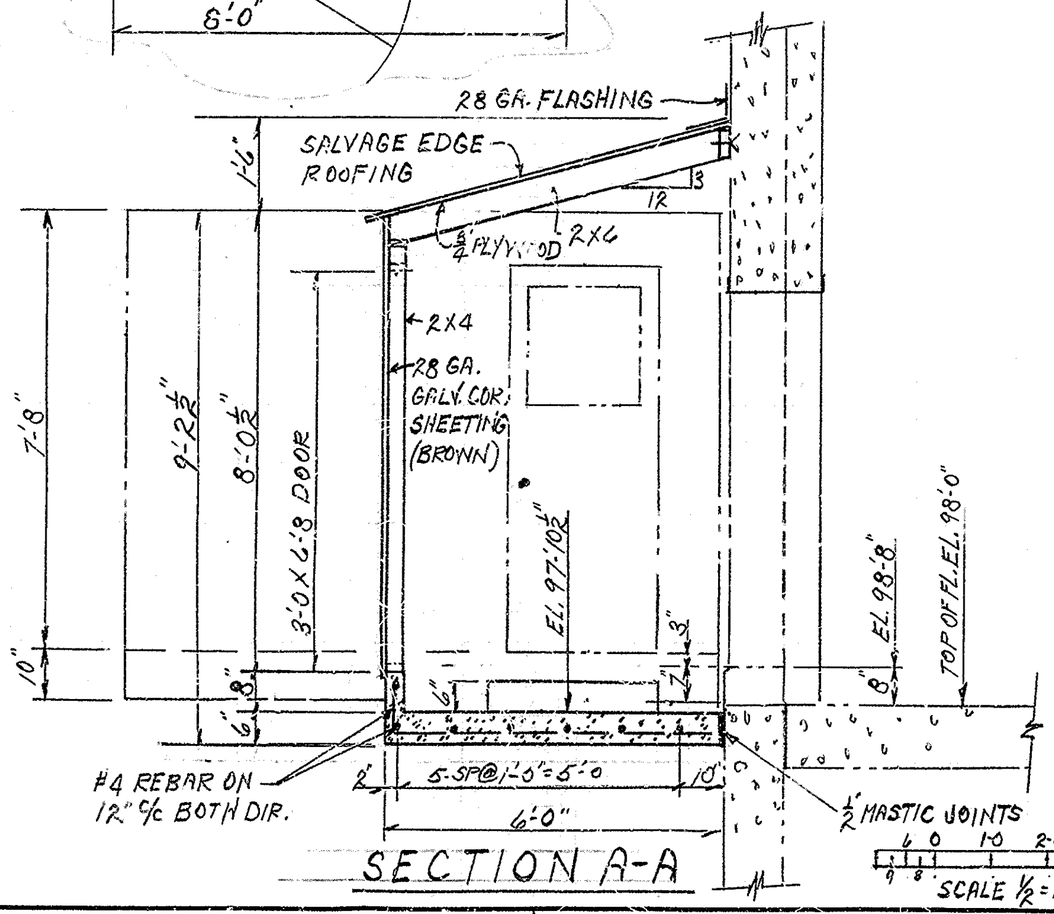

SECTION A-A

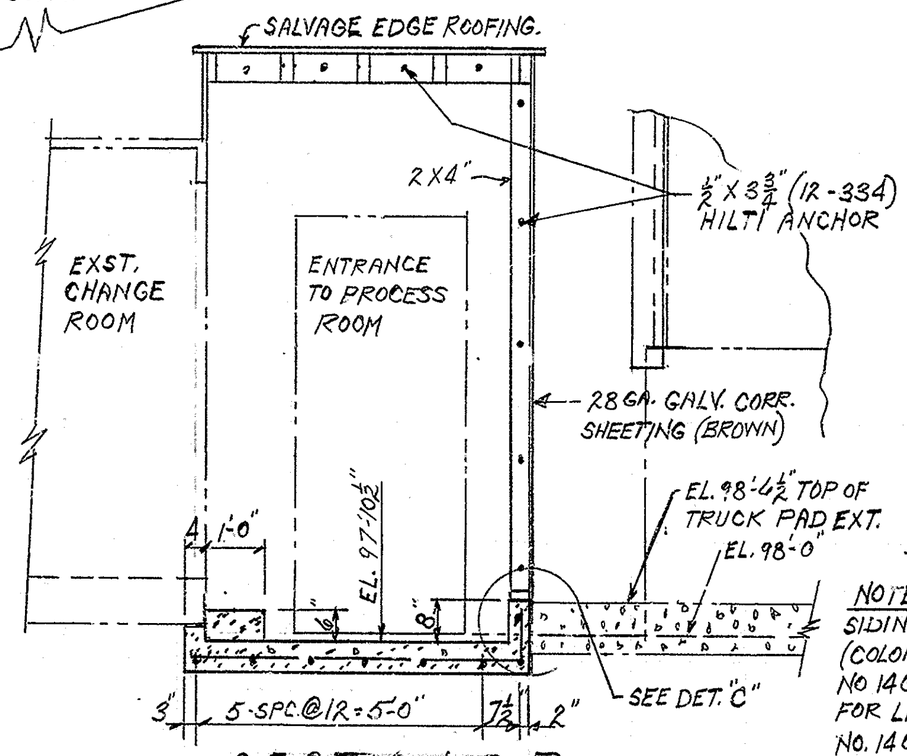

SECTION B-B

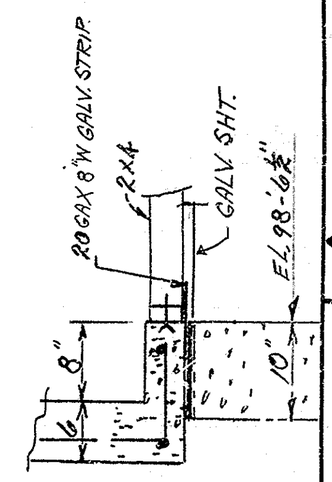

ENLARGED DET. "C"

NOTES
SIDING 28 GA. GALV. CORR. SHEETS (COLOR BROWN)
NO 14 GA HEX HD. SCREWS ⅞ LG. FOR LAP OF SHEETS.
NO. 14 GA. HEX. HD. SCREWS 2" LG. FOR CONN. SHEETS TO FRAME

QTY. REQD.	SYM	ITEM NO.	NOMENCLATURE OR DESCRIPTION	CODE IDENT. NO.	PART OR IDENTIFYING NO.	MATERIAL	SPECIFICATION	ZONE

PARTS LIST

INDEX CODE NUMBER				UNLESS OTHERWISE SPECIFIED	CONTRACT NO.	A/E CONTRACT NO.	CODE IDENT. NO.
AREA	DWG. TYPE	CL.	ORIG.		DFTSPN. R.B. HOOPER / DATE OF DWG. 9-19-86	FOR West Valley Nuclear Services Co., Inc. West Valley, New York	
				TOLERANCES - DO NOT SCALE	CHECKER J.P. GENCO / DFT. S. SUPVR.		
SPEC CODE				2PL DEC ± / 3PL DEC ± / ANGLES ± / AA	DESIGN / ENGR.	C.S.S. BUILDING ENTRANCE AIRLOCK TO PROCESS ROOM-ARRGT. & SECT.	
				FRACTIONS ±			
					FACILITIES N/A / Q.A. N/A	DWG. SIZE C / SCALE ½=1'-0" / DWG NO. 900C-1521 / REV 1	
					ENGR. / E&OS N/A	WEIGHT / A/E DWG NO.	SHEET 1 OF 1

REPROCRAFT