VERIFY ALL DOCUMENTS FOR CURRENT REVISION AND PENDING CHANGES PRIOR TO EACH USE.
INIT_____ DATE_____

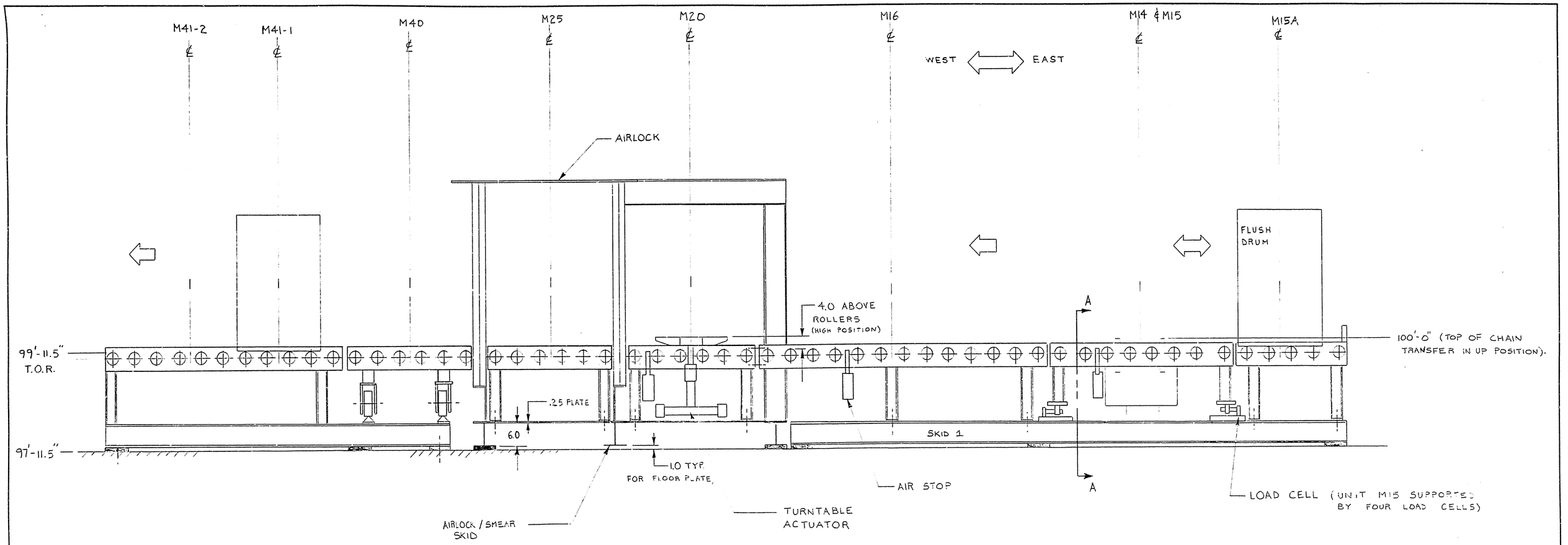

ELEVATIONS

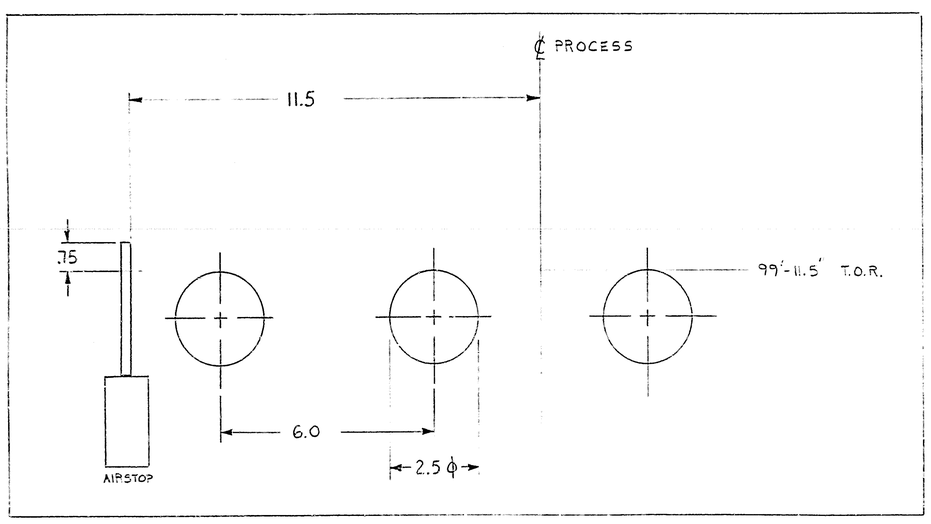

AIRSTOP LOCATION

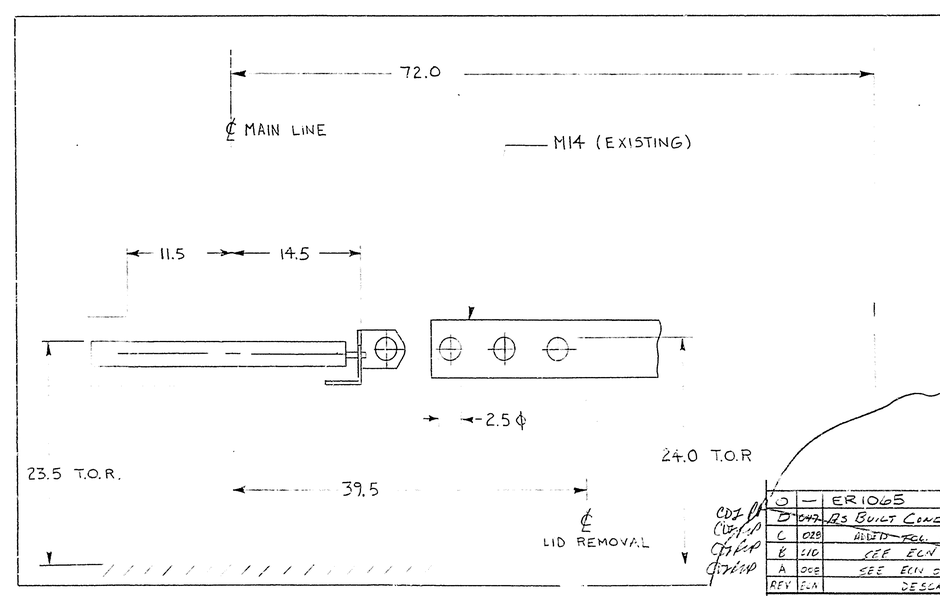

M14/M15 INTERFACE
SECTION A-A
(SEE DRG 011-09-38D)

TOLERANCE = +/- .06" UNLESS OTHERWISE SPECIFIED

REV		DESCRIPTION	DATE	APPR
O	—	ER1065	7/24/87	
D	047	AS BUILT CONDITION	3/24/87	
C	028	~~ADDED FOL. & REV. BLOCK~~	4/4/87	
B	010	~~SEE ECN 010 SH. 1-3~~	11/17/86	
A	002	~~SEE ECN 002 SH. 1-3~~	10/16/86	

CDI 10/24/87
CDI 10/24/87
CDI 10/24/87
CDI 10/24/87

WEST VALLEY NUCLEAR SERVICES

RADWASTE TREATMENT SYSTEM

W. O. | HANDLING TECHNOLOGY, INC. FAIRPORT, N.Y. | REV. O

DRAWN McGoldrick DATE 9/5/86 | DWG NO 011-09-10 | SHEET 4 OF 4

SCALE 1.0" = 12.0"

SYSTEM ARRANGEMENT

THIS DWG AND THE DESIGN CONTAINED THEREIN IS THE PROPERTY OF HANDLING TECHNOLOGY, INC FAIRPORT N.Y. AND IS NOT TO BE COPIED WITHOUT THEIR CONSENT

APPROVALS

PROJECT MANAGER		9/24/86
PRODUCT MANAGER		9/24/86
CHIEF ENGINEER		9-24-86
DESIGN ENGINEER		9/5/86

APPROVAL

COG. MGR.		7/24/87
COG. ENGR.		7/24/87
DRFT. SUPR.		7/24/87
Q.A.		