VERIFY ALL DOCUMENTS FOR CURRENT REVISION AND PENDING CHANGES PRIOR TO EACH USE.
INIT_____ DATE_____

905-D-180

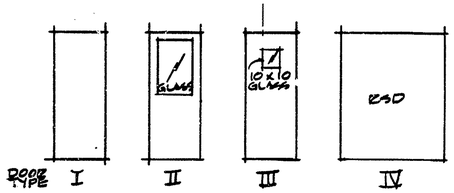

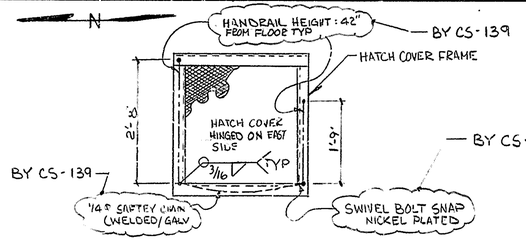

DETAIL 32
(905D-178, J14)

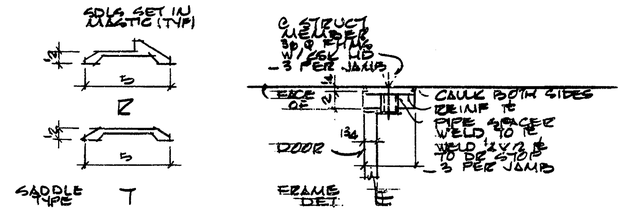

REV NO	DATE	REVISION	DR	CH	APPROVED
0	6/5/87	ER 1067			
1	6/10/87	PER ECN 1689	CCG		
2	3-15-88	REV PER ECN 2258	GW		
3	7-19-88	REVISED PER ECN 2532	LRK		
4	4-3-90	REV PER ECN VF-1-106	GW	DKS	
5	5-3-90	REV. PER ECN VF-1-153	GW	DKS	
6	7-11-91	REV/ECN 4304	RMS	HAB	
7	11-2-91	REV/ECN 4501	RMS	HAB	
8	2-19-92	REV/ECN 4911	GW	HAB	
9	10-22-92	REV PER ECN 5567	GW	HAB	
10	6-11-93	REV/ECN-VF-28-1035	PD	HAB	MEM
11	8-12-93	REV/ECN-VF-28-1169 & 1204	GW	DKS	MEM

DOORS

MARK	DWG	SIZE	FRAME DET	FRAME DWG W	FRAME HEAD	FRAME JAMB	SADDLE TYPE	SADDLE MTL	DOOR TYPE	DOOR SIZE	DOOR MTL	DOOR SWING	DOOR GLZG	DOOR REMARKS
D1	905D-178	K2			HB	JB	SD		IV	14'-0 x 11'	STL		—	ROLLING SHUTTER DR
D2		J3	E	5¾	HA	JA	E	ALUM	I	3'-0 x 7'-0	HM		WIRE GL	
D3		I3					T		III					
D4		G1					E		III	2'-8 x 7'-0			—	
D5		J7		5¾			T		II	3'-0 x 7'-0			WIRE GL	
D6		J6		5¾			T		II					
D7		G7					E		III				—	

HARDWARE

MARK	LOCK	HINGE	CLOSER	REMARKS	LIMITEL
D1		—	—		—
D2	L3	H1	C5		
D3			C3		
D4			C5		
D5			C3		
D6	L1		C3		
D7	L3		C5		

WEARSIDE INDICATES KEYED SIDE OR OUTSIDE OF DOOR

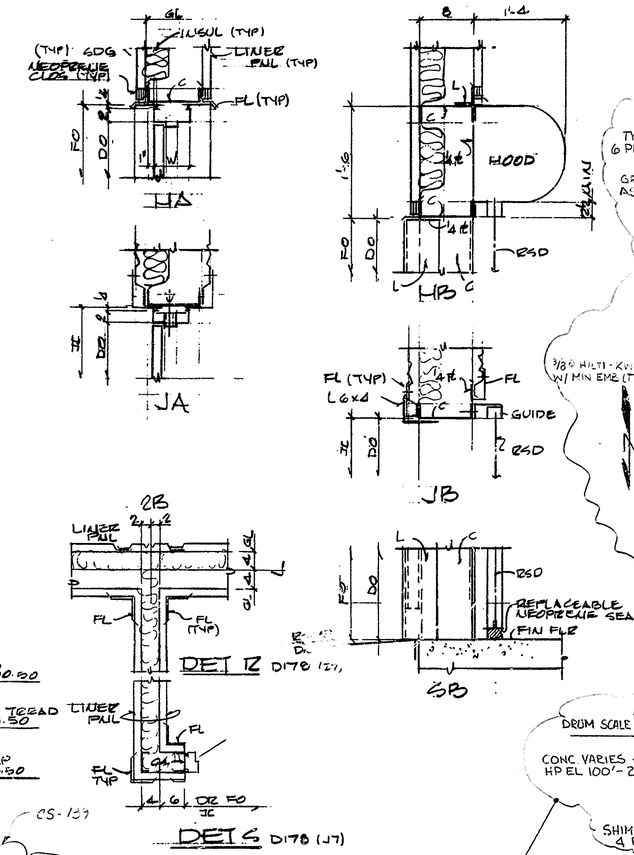

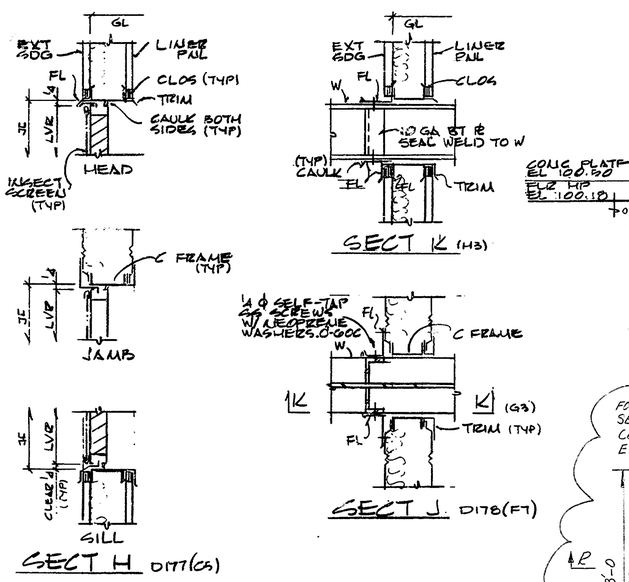

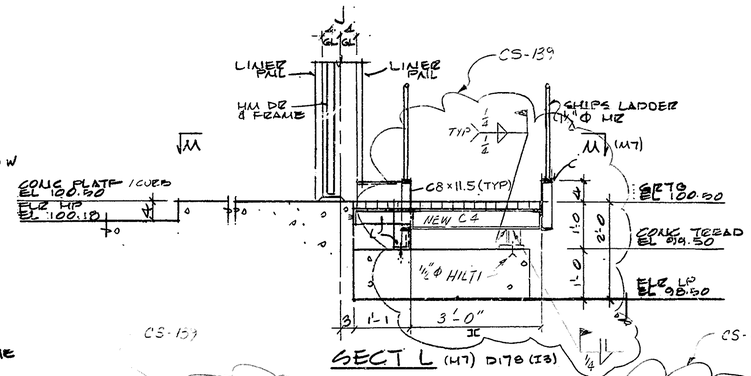

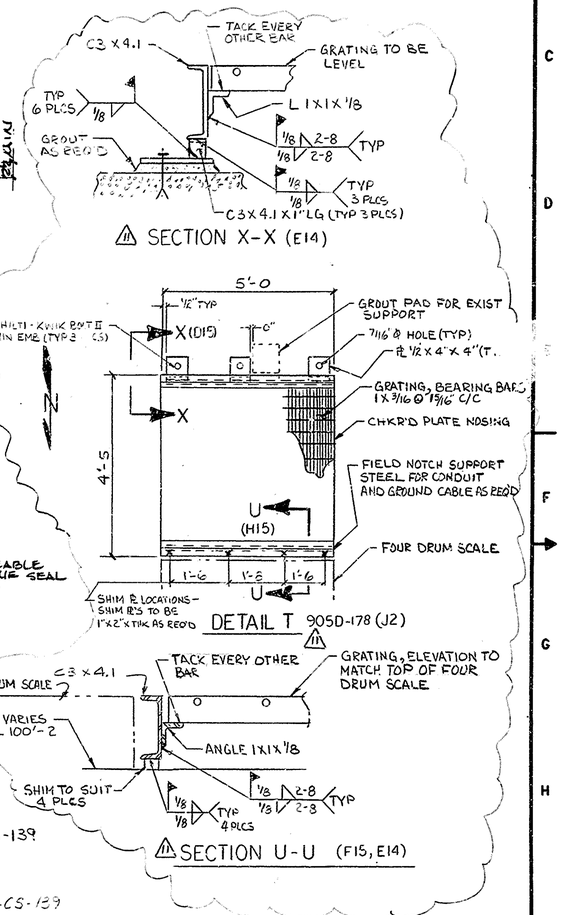

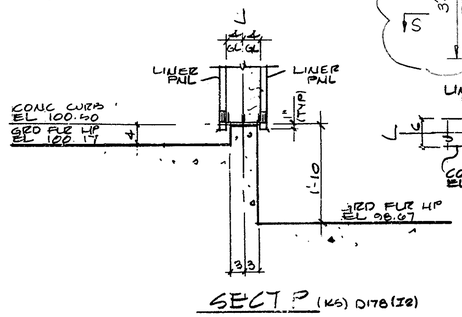

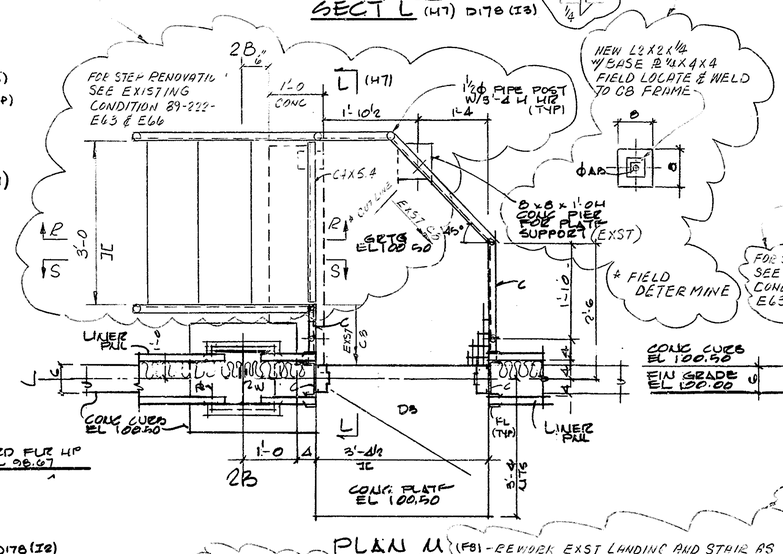

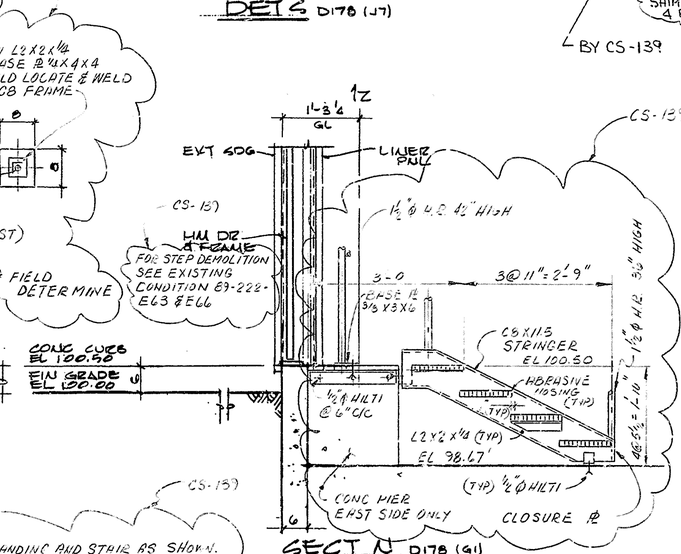

THE WORK ON THIS DRAWING IS PART OF SPECIFICATION WVNS-CS-134 UNLESS NOTED.
CS-139 ZONES H5, G8, I9, J4, G15, B6 AND RELATED DETAILS

5-14-87 NOTE: SEE 905D-178 FOR NOTES

FOR DRAWING INDEX SEE DRAWING NO. _____

APPRVD WVNS CO.		6/5/87
PROJECT MGR		5/15/87
ENGINEER		5/15/87
LEAD DISC. ENGR		5/15/87
DESIGN	BILAK	5/15/87
CHECKED	A. GROSS	5/15/87
DRAWN	BILAK	DATE 5/5/87
DE-AC07-81NE44139 PROJECT NO.		
19-CWV-02275 SUBCONTRACT NO.		
ISSUED FOR CONSTRUCTION		

EBASCO SERVICES INCORPORATED
A/E O.F.S. NO. 2388 TASK ORDER 009
FOR
WEST VALLEY NUCLEAR SERVICES COMPANY, INC
WEST VALLEY, NEW YORK
WEST VALLEY DEMONSTRATION PROJECT
COLD CHEM BLDG DOOR SCHEDULE & MISC ARCH DETS

SIZE	INDEX CODE NUMBER					DRAWING NO.	REV.
D	AREA	DR. TYP	CL	ORIG		905D-180	11

SCALE 3/4=1'-0 UNL | SPEC. CODES | A/E SHEET NO. 905-D-180 A