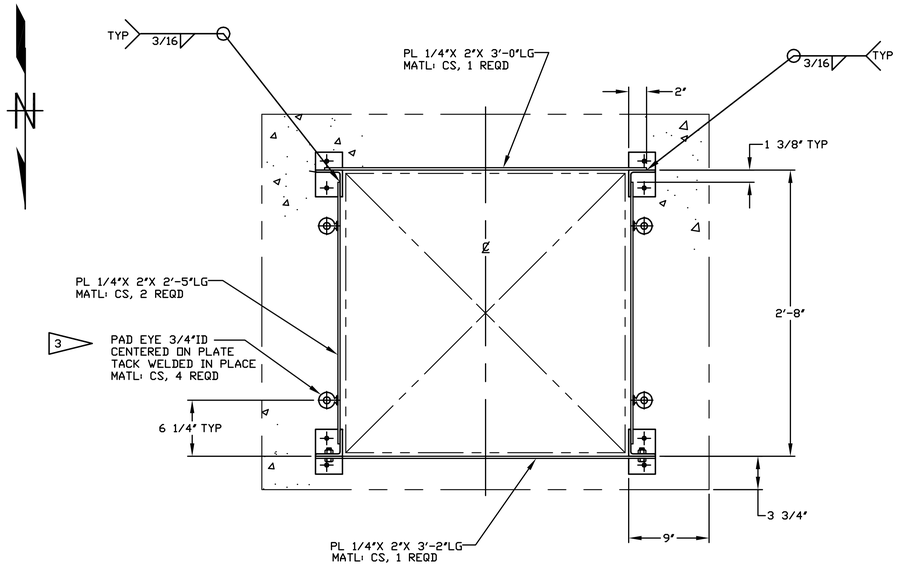

PLAN VIEW
CAUSTIC/NITRIC CONTAINMENT
SCALE: 1 1/2"=1'-0"

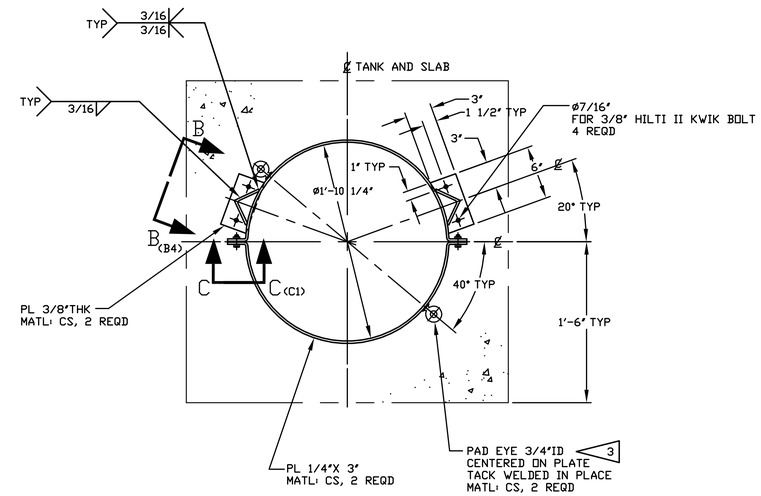

PLAN VIEW
WASTE CONTAINMENT
SCALE: 1 1/2"=1'-0"

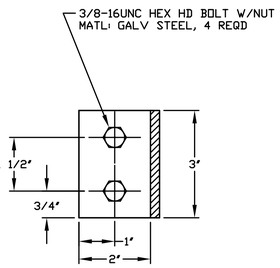

SECTION C-C (D3)
SCALE: 3/8"=1'-0"

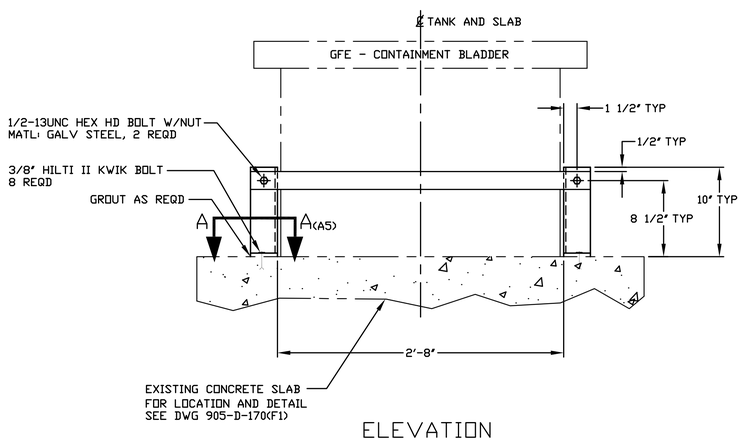

ELEVATION
LOOKING SOUTH
SCALE: 1 1/2"=1'-0"

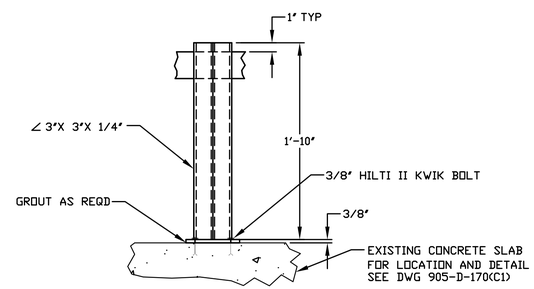

VIEW B-B (D4)
SCALE: 1 1/2"=1'-0"

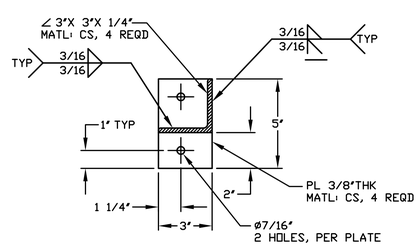

SECTION A-A (B7)
SCALE: 3/4"=1'-0"

NOTES:

1. CONSTRUCTION SPEC CS-139 IS APPLICABLE FOR THIS WORK.
2. WORK COVERED UNDER THIS DRAWING IS BY TD-0075.
3. FIELD PROVIDE: PAD EYES AND MOLDED RUBBER TIE-DOWNS WITH S HOOKS.

REVISIONS			
REV	DESCRIPTION	APV'D	
0	CREATED PER: ECN 8673 ER 3233	JRH	2/8/95

VERIFY ALL DOCUMENTS FOR CURRENT REVISION AND PENDING CHANGES PRIOR TO EACH USE
INIT _____ DATE _____

UNLESS OTHERWISE SPECIFIED ALL DIMENSIONS IN INCHES
TOLERANCES: 2PL DEC ± N/A; 3PL DEC ± N/A; FRACTS ± 1/8; ANGLES ± N/A; FINISH 125/√; DO NOT SCALE DRAWING
FILE NAME 905-D-179_002_000
PLOT SCALE 1=8.00
D SPEC NO. E8673
NEXT ASSEMBLY

DRAFTER J. HENRY DATE 3/14/95
CHECKER H. BARKER DATE 3/16/95
ENGINEER J. HEPP DATE 3/16/95

SEE ENGINEERING RELEASE FORM (ER) FOR DRAWING APPROVAL SIGNATURES.

DWG SIZE D

A/E CONTRACT NO. CODE IDENT NO.
FOR
WEST VALLEY NUCLEAR SERVICES CO., INC.
WEST VALLEY N.Y.

COLD CHEMICAL BUILDING
SPILL CONTAINMENT
SECTIONS & DETAILS

SCALE NOTED
WEIGHT
A/E DWG NO.
DWG NO. 905-D-179
REV 0
SHEET 2 OF

CAD DRAWING-DO NOT REVISE THIS ORIGINAL