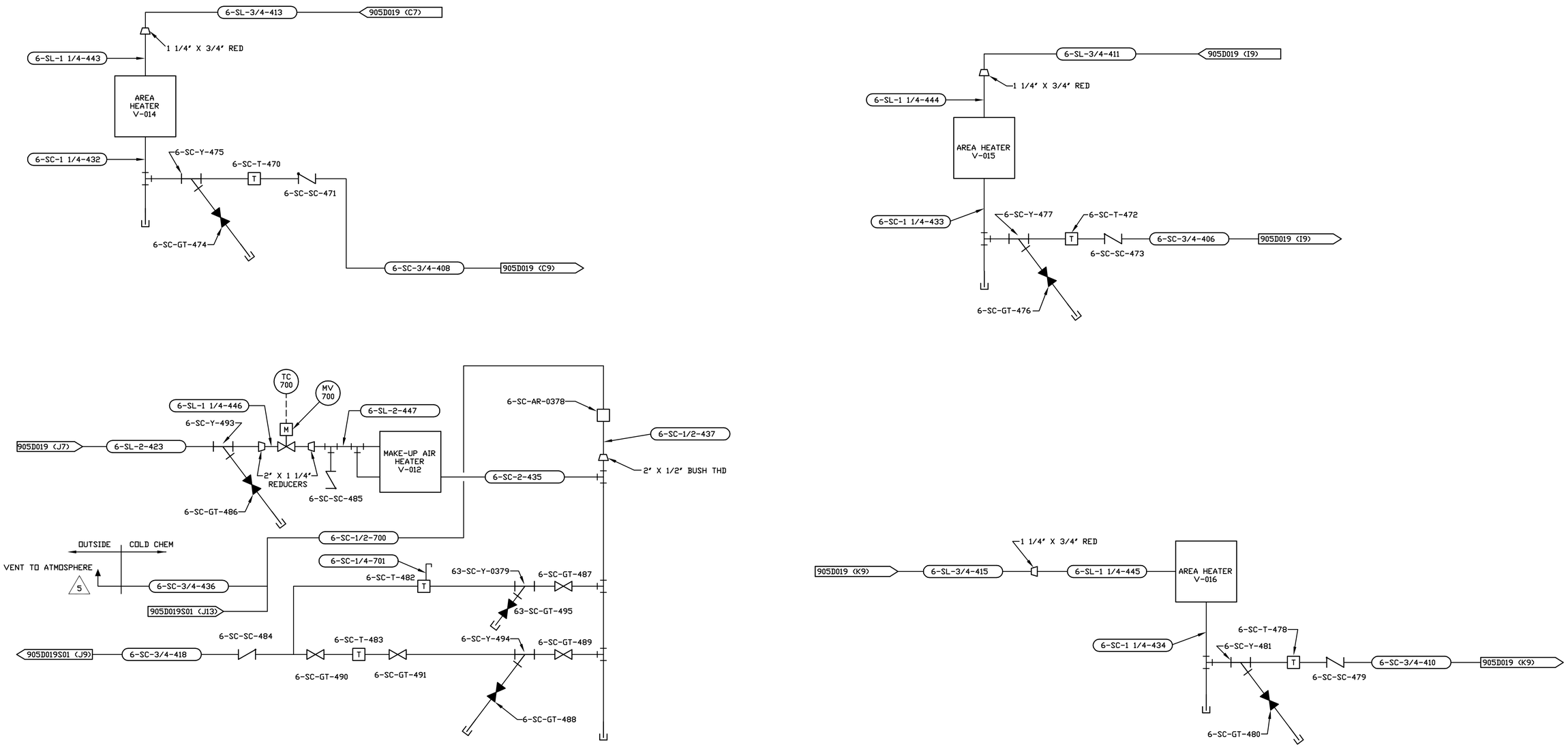

QTY REQD	ITEM NO.	NOMENCLATURE OR DESCRIPTION	PART OR IDENTIFYING NO.	MATERIAL OR SPEC

PARTS LIST

REVISIONS

REV	DESCRIPTION	APVD
0	ER#2827 1/20/94 CREATED PER ECN 7090 PAM 12/14/93	JRH / RMB
1	ECN 7611 DJN 3/22/94	HAB / RMB
2	ECN 7752 KGZ 4/20/94	DRS / HAJ
3	ECN 10027 AAJ 6/21/96	HAB
4	ECN 10326 JHS 10/29/96	HAB
5	ECN 11200 BP 02/19/98	

VERIFY ALL DOCUMENTS FOR CURRENT REVISION AND PENDING CHANGES PRIOR TO EACH USE
INIT _____ DATE _____

UNLESS OTHERWISE SPECIFIED

TOLERANCES-DO NOT SCALE

2 PL DEC	3 PL DEC	ANGLES	N/A
± N/A	± N/A	± N/A	

FRACTIONS ± N/A

D.SPEC.NO. E7090

NEXT ASSEMBLY

DRAFTER	P. MROCZKA	DATE 12/17/93
CHECKER	H. BARKER	DATE 12/31/93
ENGR.	R. BARTOCHOWSKI	DATE 1/18/94
COG.MGR.APPVL	T. COTTRELL	DATE 1/18/94
SYS.ENGR.APPVL	D. DARUWALLA	DATE 1/20/94
Q.A.APPVL	R. KRAPF	DATE 1/17/94
DFTG.SUPR.	J. HORTON	DATE 1/20/94

A/E CONTRACT NO. CODE IDENT. NO.

FOR

WEST VALLEY NUCLEAR SERVICES CO.,INC.
WEST VALLEY, NEW YORK

P & ID
COLD CHEMICAL STEAM & CONDENSATE SYSTEM

DWG SIZE D | SCALE NONE | WEIGHT | DWG NO. 905D-019 | REV 5

A/E DWG NO. | SHEET 3 OF

PLOT SCALE 1=1

CAD DRAWING-DO NOT REVISE THIS ORIGINAL

1=1.00 E019D003