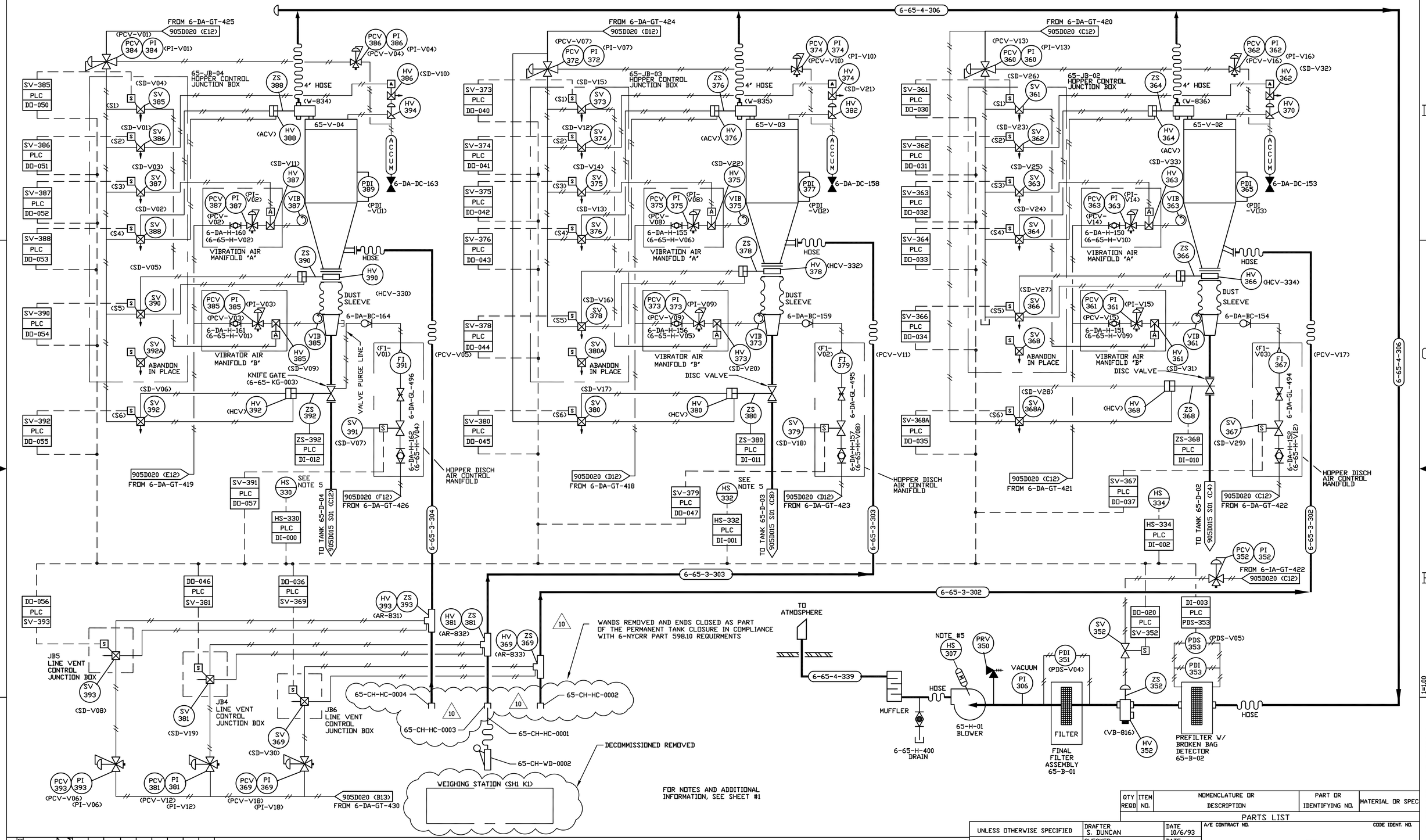

QTY REQD	ITEM NO.	NOMENCLATURE OR DESCRIPTION	PART OR IDENTIFYING NO.	MATERIAL OR SPEC

PARTS LIST

REV	DESCRIPTION	APVD
0	ER 2751 10/26/93 CREATED PER ECN 6808 SRD 10/6/93	JRH
1	ECN 8607 MJL 1/26/95	GLS / RWM
2	ECN 9124 EWM 9/24/95	GLS
3	ECN 9395 RGM 11/08/95	GLS
4	ECN 10051 JHS 7/17/96	GLS
5	ECN 10442 DAK 12/31/96	HAB
6	ECN 10746 DMM 9/18/97	HAB
7	ECN 11040 BP 08/27/98	HAB
8	ECN 11654 CGR 10/5/98	
9	ECN 25591 HAB 06/08/2003	HAB
10	ECN 26139 HAB 12/13/2004	HAB

VERIFY ALL DOCUMENTS FOR CURRENT REVISION AND PENDING CHANGES PRIOR TO EACH USE
INIT _____ DATE _____

UNLESS OTHERWISE SPECIFIED	DRAFTER S. DUNCAN	DATE 10/6/93
ALL DIM IN INCHES	CHECKER D. SHAFFER	DATE 10/26/93
TOLERANCES-DO NOT SCALE	ENGR. P. NESTER	DATE 10/26/93
2 PL DEC ± N/A; 3 PL DEC ± N/A; ANGLES ± N/A; N/A		
FRACTIONS ± N/A	COG.MGR.APPVL D. RICKETTSON	DATE 10/26/93
D.SPEC.NO. 0000	SYS.ENGR.APPVL D. DARUWALLA	DATE 10/26/93
NEXT ASSEMBLY	Q.A.APPVL D. DEMPSTER	DATE 10/26/93
	DFTG.SUPR. J. HORTON	DATE 10/26/93

A/E CONTRACT NO. — CODE IDENT. NO.

FOR
WEST VALLEY NUCLEAR SERVICES CO.,INC.
WEST VALLEY, NEW YORK

P & ID
COLD CHEMICAL PREPERATION AND FEED SYSTEM

DWG SIZE D — SCALE NONE — WEIGHT — DWG NO. 905D-018 — REV 10

A/E DWG NO. — SHEET 2 OF

1=1.00 147316

CAD DRAWING-DO NOT REVISE THIS ORIGINAL