905-D-018

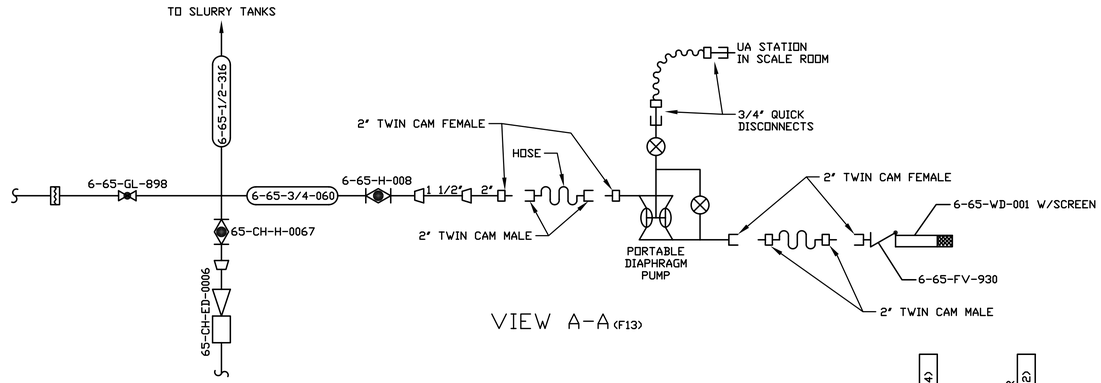

VIEW A-A (F13)

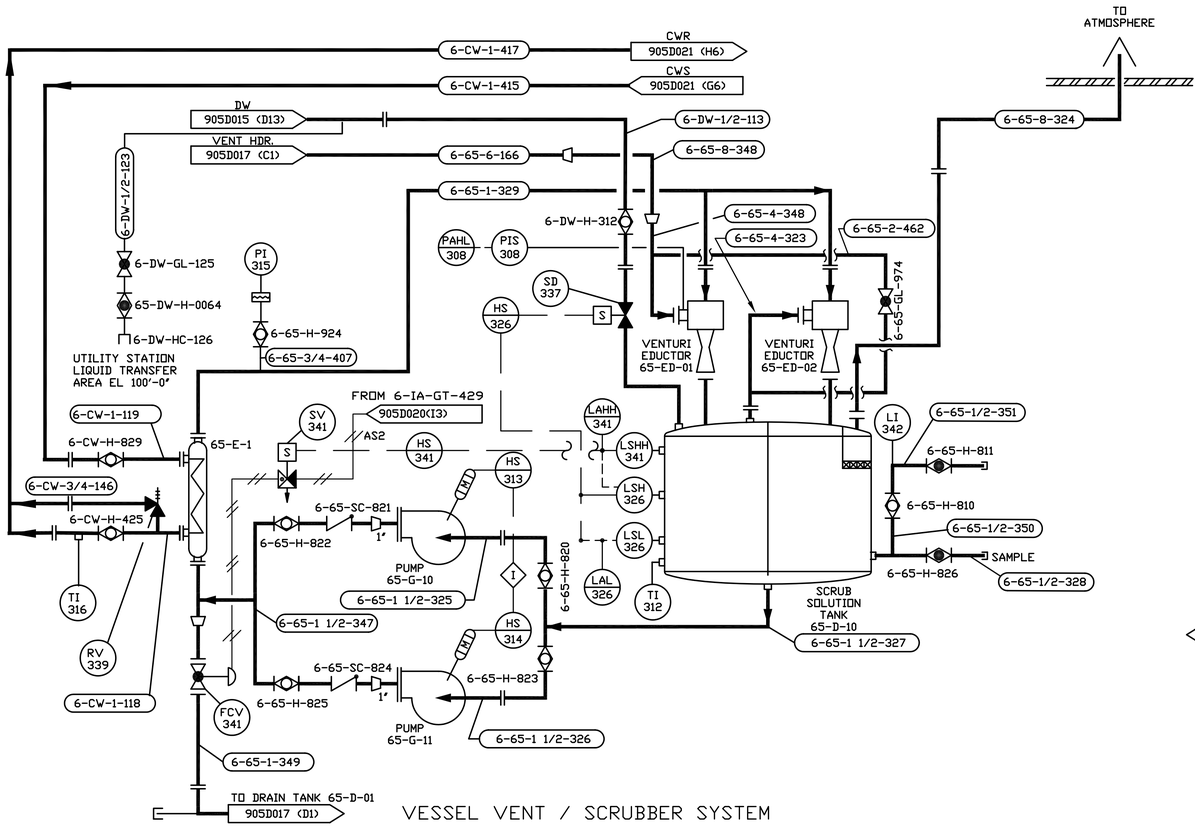

VESSEL VENT / SCRUBBER SYSTEM

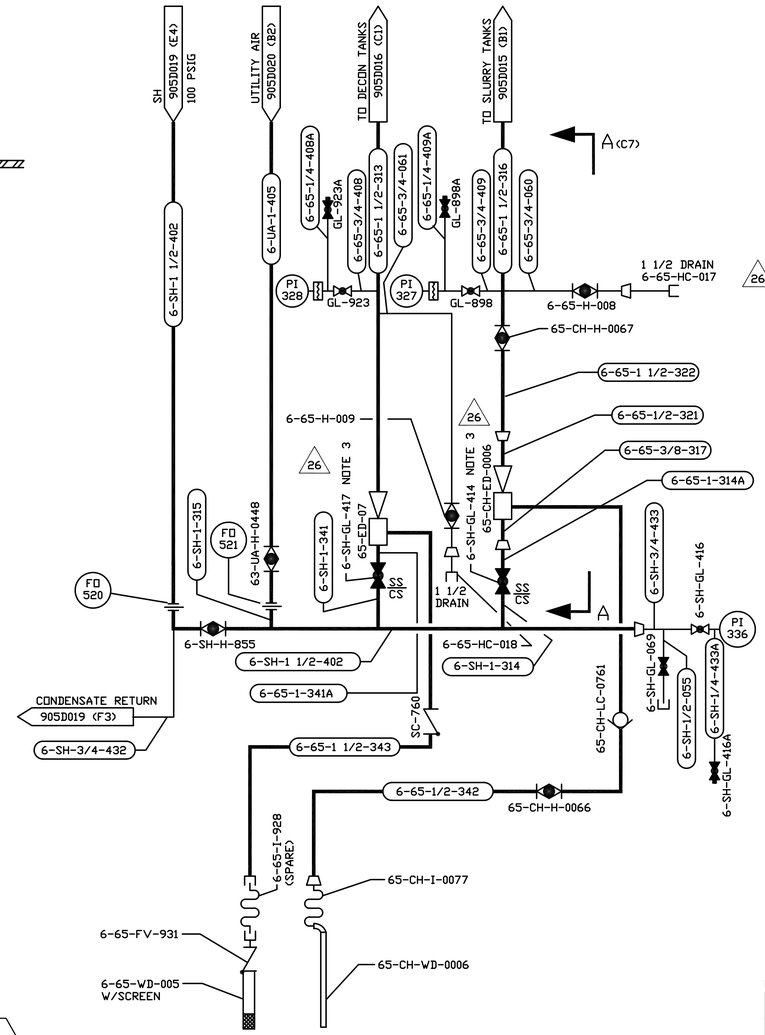

DECOMMISSIONED REMOVED

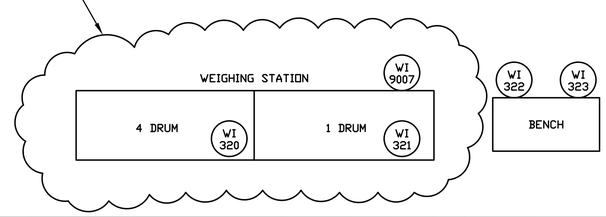

VERIFY ALL DOCUMENTS FOR CURRENT REVISION AND PENDING CHANGES PRIOR TO EACH USE
INIT _____ DATE _____

NO.	DATE	REVISION	DR	CH	APPROVED		
B	05-14-87	GENERAL REVISION	TJK	ADJ	RJL	AJD FSK	MDW
C	08-14-87	REVISION PER EBAR 945A	TJK	ADJ	EGS RJL	AJD FSK	MDW
D	10-23-87	REVISION PER EBAR 945B	TJK	JV	RJL	AJD	MDW
0	10-03-88	ER1468			JRH		
23	6/24/98	ECN 11436A	DLL	HAB			
24	03/10/99	ECN 11943	BP				
25	06/09/2003	ECN 25591		HAB			
26	12/13/2004	ECN 26139		HAB			
15	6/6/95	REV'D PER ECN 8976	MJL	DRS			
16	10/24/95	ECN 9320	LRP	KQ			
17	4/8/96	ECN 9788	SRD	HAB			
18	10/22/96	ECN 10334	HAB	DRS			
19	12/17/96	ECN 10437	LRP	HAB			
20	08/04/97	ECN 10889	BP	HAB			
21	09/22/97	ECN 10746	DMM	HAB			
22	10/28/97	ECN 10991	DAK	HAB			

NOTES:

1. FOR GENERAL NOTES SEE DWG. 905-D-015.
2. ALL VALVE/SPECIALTY ITEM NUMBERS PRECEDED BY 6-65-, UNLESS OTHERWISE NOTED.
3. VALVES 6-SH-GL-414 AND 6-SH-GL-417 LOCKED AND TAGGED CLOSED AS PART OF THE PERMANENT TANK CLOSURE IN COMPLIANCE WITH 6-NYCRR PART 598.10 REQUIREMENTS (26)
4.
5. THIS ITEM IS LOCATED ON VENDOR PROVIDED PANEL. ALL OTHER PANEL MOUNTED INSTRUMENTS ARE LOCATED AT THE COLD CHEMICAL SYSTEM CONTROL STATION.
7. VACUUM LINE ELBOWS SHALL HAVE A 48" RADIUS. IF FIELD CONDITIONS PREVENT USAGE, PVC HOSE MADE OF FDA AND USDA APPROVED INGREDIENTS, FOOD GRADE, STATIC-CONDUCTIVE BY EMBEDDED COPPER STRAND WIRE, CAN BE SUBSTITUTED.
8. ALL LINE, VALVE & INSTRUMENT NUMBERS IN PARENTHESIS (XXX) ARE VENDOR P & ID NUMBERS.
9. ALL INSTRUMENT ITEM NUMBERS ARE PRECEDED BY 65-.

EQUIPT. NUMBER	EQUIPT. NAME	REF. DWG. NUMBER	DESCRIPTION
65-V-02	FILL HOPPER	___	10 CU. FT
65-V-03	FILL HOPPER	___	10 CU. FT
65-V-04	FILL HOPPER	___	10 CU. FT
65-H-01	VACUUM PUMP	___	ROTARY LOBE,
65-G-10	SCRUB SOL. TANK RECIRC PUMP	___	CENTRIFUGAL TYPE, 25 GPM, 304 SS
65-G-11	SCRUB SOL. TANK RECIRC PUMP	___	CENTRIFUGAL TYPE, 25 GPM, 304 SS
65-D-10	SCRUB SOL. TANK	___	100 GAL VOLUME, 304 SS
65-ED-01	VAC, GEN &	___	6" INLET & OUTLET
65-ED-02	SCRUBBER	___	MAX. 8" H20 VACUUM TOTAL
65-CH-ED-0006	LIQUID EDUCTOR	___	1/2" SUCTION/DISCHARGE, 3/8" PRESS. CONN, 400 PPH STEAM MAX
65-ED-07	LIQUID EDUCTOR	___	1 1/2" SUCTION/DISCHARGE, 1" PRESS. CONN, 400 PPH STEAM MAX
65-D-01	FILTER ASSEMBLY	___	MANUFACTURERS STD

FOR DRAWING INDEX SEE DRAWING NO.

APPRVD WVNS CO.		EBASCO SERVICES INCORPORATED
PROJECT MGR M.D. WEINGART	3-31-87	A/E D.F.S. NO. 2388 FOR TASK ORDER 009
ENGINEER SUPV A.J. DIFILIPPO	3-31-87	WEST VALLEY NUCLEAR SERVICES COMPANY, INC WEST VALLEY, NEW YORK
LEAD DISC ENGR F. TULIPANO	3-31-87	
DESIGN R.J. LEWKO	3-31-87	WEST VALLEY DEMONSTRATION PROJECT P & ID COLD CHEMICAL PREPARATION AND FEED SYSTEM
CHECKED T.J. PIAZZA	3-31-87	
DRAWN T.J. KITZ	DATE 3-31-87	

DE-AC07-81NE44139 PROJECT NO.	SIZE	INDEX CODE NUMBER				DRAWING NO.	REV.
		AREA	DR. TYP	CL	DRIG	905D-018	26
19-CWV-02275 SUBCONTRACT NO.	D						
ISSUED FOR CONSTRUCTION	SCALE: NONE		SPEC. CODES			A/E SHEET NO. 905-D-018 D	1 OF 2

CAD DRAWING - Do not revise this original.

147315 1=1.00