VERIFY ALL DOCUMENTS FOR CURRENT REVISION AND PENDING CHANGES PRIOR TO EACH USE.
INIT_____ DATE_____

905-D-013 C

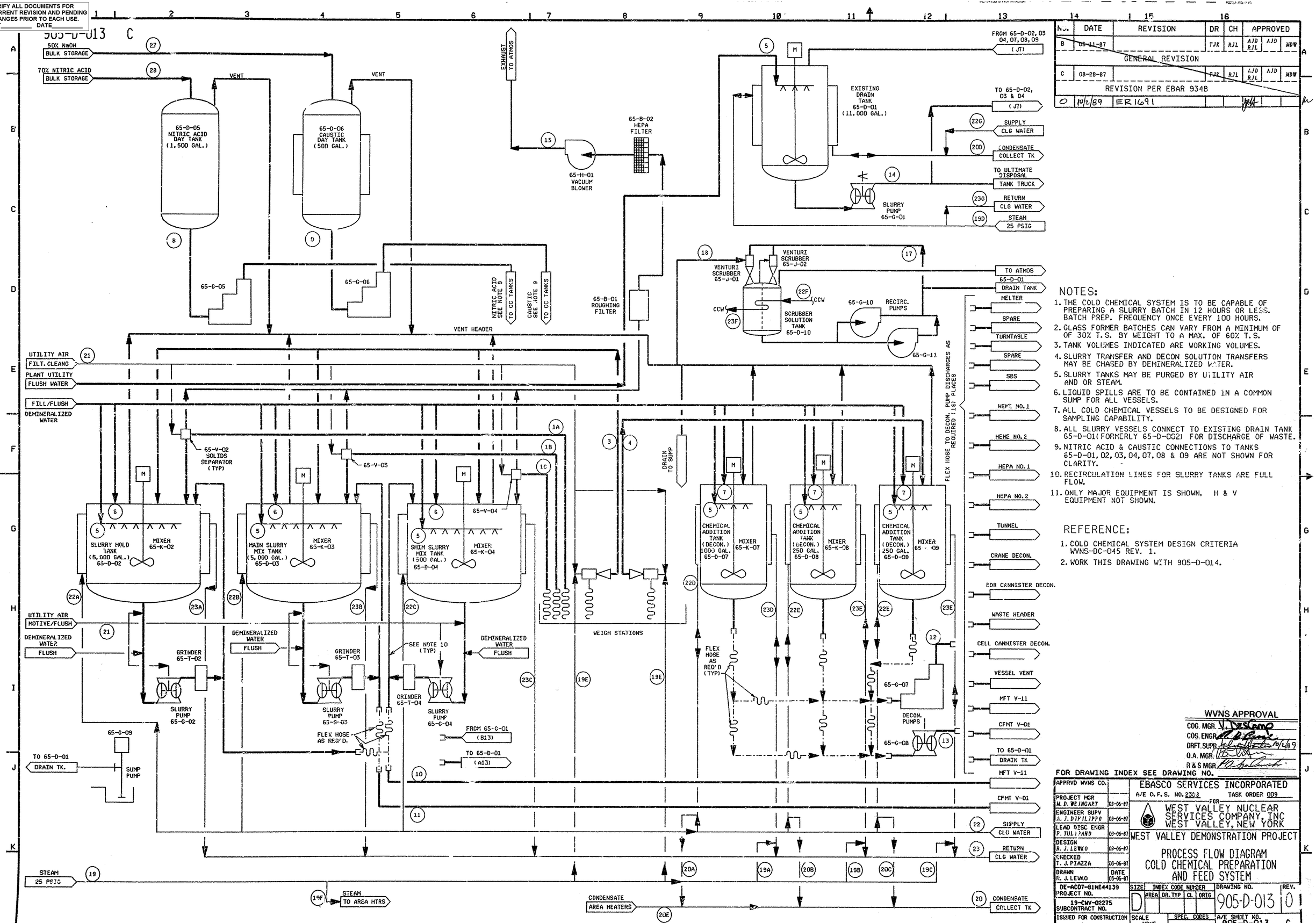

No.	DATE	REVISION	DR	CH	APPROVED		
B	06-11-87	GENERAL REVISION	TJK	RJL	AJD RJL	AJD	MDW
C	08-28-87	REVISION PER EBAR 934B	TJK	RJL	AJD RJL	AJD	MDW
0	10/2/89	ER 1691					

NOTES:

1. THE COLD CHEMICAL SYSTEM IS TO BE CAPABLE OF PREPARING A SLURRY BATCH IN 12 HOURS OR LESS. BATCH PREP. FREQUENCY ONCE EVERY 100 HOURS.
2. GLASS FORMER BATCHES CAN VARY FROM A MINIMUM OF OF 30% T.S. BY WEIGHT TO A MAX. OF 60% T.S.
3. TANK VOLUMES INDICATED ARE WORKING VOLUMES.
4. SLURRY TRANSFER AND DECON SOLUTION TRANSFERS MAY BE CHASED BY DEMINERALIZED WATER.
5. SLURRY TANKS MAY BE PURGED BY UTILITY AIR AND OR STEAM.
6. LIQUID SPILLS ARE TO BE CONTAINED IN A COMMON SUMP FOR ALL VESSELS.
7. ALL COLD CHEMICAL VESSELS TO BE DESIGNED FOR SAMPLING CAPABILITY.
8. ALL SLURRY VESSELS CONNECT TO EXISTING DRAIN TANK 65-D-01(FORMERLY 65-D-002) FOR DISCHARGE OF WASTE.
9. NITRIC ACID & CAUSTIC CONNECTIONS TO TANKS 65-D-01, 02, 03, 04, 07, 08 & 09 ARE NOT SHOWN FOR CLARITY.
10. RECIRCULATION LINES FOR SLURRY TANKS ARE FULL FLOW.
11. ONLY MAJOR EQUIPMENT IS SHOWN. H & V EQUIPMENT NOT SHOWN.

REFERENCE:

1. COLD CHEMICAL SYSTEM DESIGN CRITERIA WVNS-DC-045 REV. 1.
2. WORK THIS DRAWING WITH 905-D-014.

WVNS APPROVAL
COG. MGR.
COG. ENGR.
DRFT. SUPR.
Q.A. MGR.
R & S MGR.

FOR DRAWING INDEX SEE DRAWING NO.

APPRVD WVNS CO.		EBASCO SERVICES INCORPORATED
PROJECT MGR M. D. WEINGART	03-06-87	A/E O.F.S. NO. 2303 TASK ORDER 009
ENGINEER SUPV A. J. DIFILIPPO	03-06-87	FOR WEST VALLEY NUCLEAR SERVICES COMPANY, INC WEST VALLEY, NEW YORK
LEAD DISC ENGR F. TULIANO	03-06-87	WEST VALLEY DEMONSTRATION PROJECT
DESIGN R. J. LEWKO	03-06-87	PROCESS FLOW DIAGRAM COLD CHEMICAL PREPARATION AND FEED SYSTEM
CHECKED T. J. PIAZZA	03-06-87	
DRAWN R. J. LEWKO	DATE 03-06-87	
DE-AC07-81NE44139 PROJECT NO.		SIZE D; INDEX CODE NUMBER AREA DR. TYP CL ORIG; DRAWING NO. 905-D-013; REV. 0
19-CWV-02275 SUBCONTRACT NO.		
ISSUED FOR CONSTRUCTION		SCALE NONE; SPEC. CODES; A/E SHEET NO. 905-D-013 C