VERIFY ALL DOCUMENTS FOR CURRENT REVISION AND PENDING CHANGES PRIOR TO EACH USE.
INIT_____ DATE_____

905-D-180

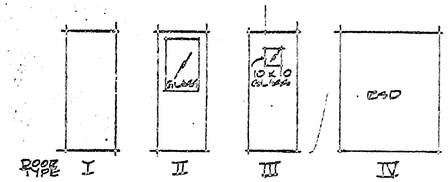

DOORS															HARDWARE					
MARK	DWG	CO-ORD	FRAME DET	FRAME DIM W	FRAME HEAD	FRAME JAMB	SADDLE TYPE	SADDLE MTL	DOOR TYPE	DOOR SIZE	DOOR MTL	DOOR SWING	DOOR GLZG	DOOR REMARKS	MARK	LOCK	HINGE	CLOSER	REMARKS	UNTEL
D1	905-D-178	K2			LB	JB	SB		IV	14'-0 x 12'-0	STL		—	ROLLING SHUTTER DR	D1		—	—		—
D2		J3	E	5¾	HA	JA	E	MUM	III	3'-0 x 7'-0	KM		¼ WIRE GL		D2	L3	H1	C5		
D3		I3					T		III						D3			C3		
D4		G1					E		III	2'-8 x 7'-0			—		D4			C5		
D5		J7		5¾			T		II	3'-0 x 7'-0			¼ WIRE GL		D5			C3		
D6		J6		5¾			T		II						D6	L1		C3		
D7		G5					E		III				—		D7	L5		C5		

NEARSIDE INDICATES KEYED SIDE OR OUTSIDE OF DOOR

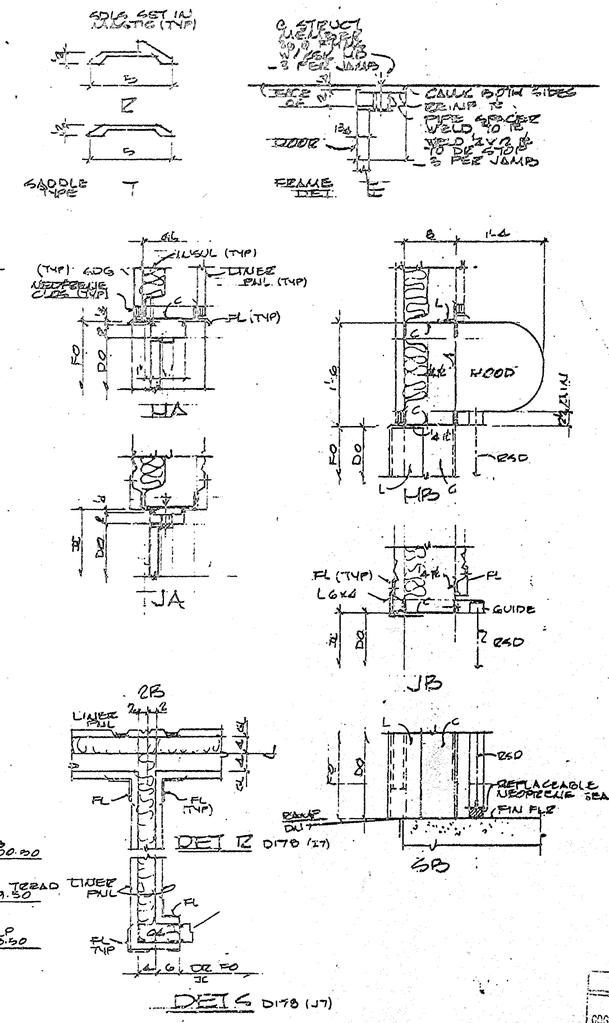

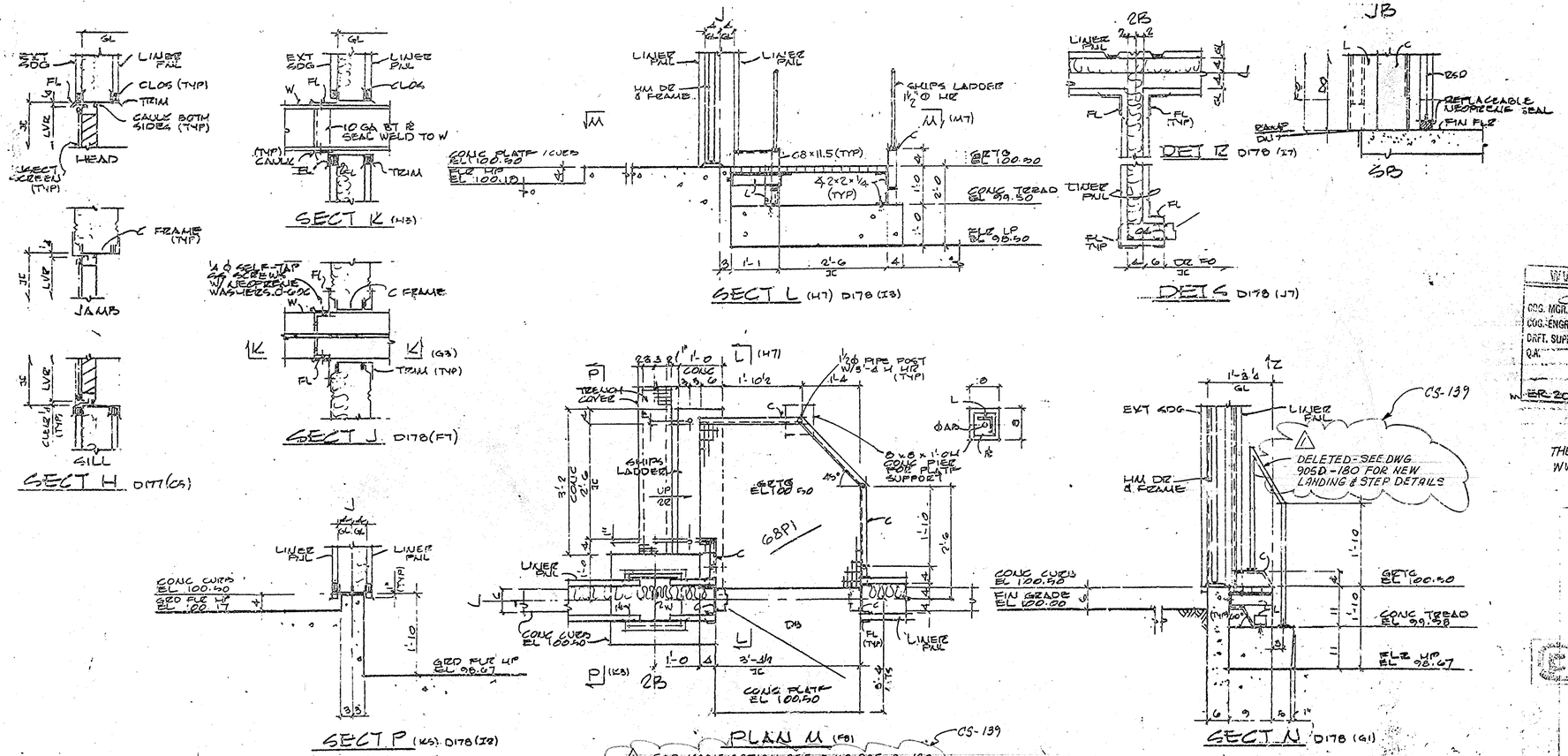

REVISIONS						
ZONE	REV	DESCRIPTION	BY	CHK	DATE	APPROVED
	1	REV/ECN 4304	RHS	HPB	7/12/91	VM

WVNS APPROVAL
COG. MGR.
COG. ENGR.
DRFT. SUPR.
Q.A.
ER-2088 9/6/91

PO# 33946 AR# 501
APPROVED
APPROVED WITH COMMENTS
DISAPPROVED
RECEIPT ACKNOWLEDGED
SIGNED
S.R. BRANCH
CORRECTIVE ENGINEER

THE WORK ON THIS DRAWING IS PART OF SPECIFICATION WVNS-CS-134 UNLESS NOTED.

VENDOR SUBMITTAL REVIEW
DOCUMENT NO. AP 501
APPROVED
APPROVED AS NOTED
DISAPPROVED
FOR INFORMATION ONLY
REVIEWER 7-28-90 DATE

WVNS. REF. DWG. 905-D-180
OEHLER INDUSTRIES, INC.
242 ELK STREET • BUFFALO, NEW YORK 14210
JOB TITLE: WEST VALLEY DEMONSTRATION PROJECT
COLD STORAGE BLDG.
DOOR SCHEDULE & ARCH. DETAILS
DATE 7/89 JOB NUMBER 89-222
DRAWN BY CHECKED BY
DWG. OR INT. NO. E66 1