VERIFY ALL DOCUMENTS FOR CURRENT REVISION AND PENDING CHANGES PRIOR TO EACH USE.
INIT_____ DATE_____

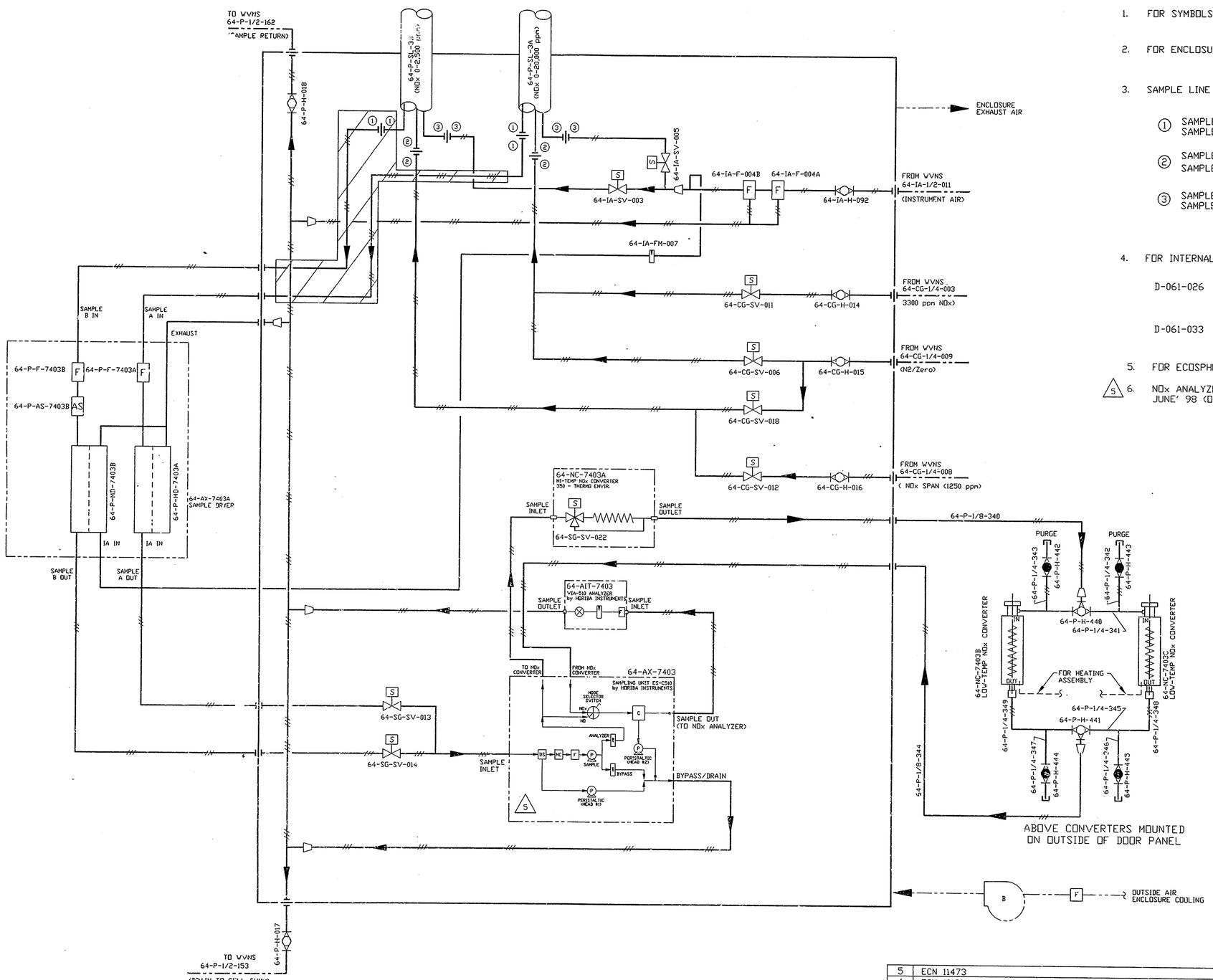

NOTES:

1. FOR SYMBOLS AND LEGEND SEE DRAWING B-061-100.

2. FOR ENCLOSURE 64-I-004 INTERNAL LAYOUT SEE DRAWING D-061-007.

3. SAMPLE LINE UNION CONNECTIONS ARE AS FOLLOWS:

   (1) SAMPLE LINE 64-P-SL-3A: NOx (INLET) SAMPLE IN
   SAMPLE LINE 64-P-SL-3B: NOx (OUTLET) SAMPLE IN

   (2) SAMPLE LINE 64-P-SL-3A: NOx (INLET)/N_2 CALIBRATION GAS
   SAMPLE LINE 64-P-SL-3B: NOx (OUTLET)/N_2 CALIBRATION GAS

   (3) SAMPLE LINE 64-P-SL-3A: NOx SAMPLE PROBE 64-P-SP-3A BLOWBACK
   SAMPLE LINE 64-P-SL-3B: NOx SAMPLE PROBE 64-P-SP-3B BLOWBACK

4. FOR INTERNAL AND INTERCONNECTION WIRING REFERENCE THE FOLLOWING DRAWINGS:

   D-061-026 ENCLOSURES 64-I-002, 003, 004 AND PLC POWER DISTRIBUTION

   D-061-033 ENCLOSURE 64-I-004 TERMINAL BLOCK WIRING

5. FOR ECOSPHERE EQUIPMENT BILL OF MATERIAL, SEE B/M-94061

5 6. NOx ANALYZER SAMPLE UNIT MODIFIED BY WORK ORDER/SHOP ORDER, JUNE' 98 (DGS-9801322-I/SD)

LETT	ALTERATION	DATE	BY	CHK'D	APPV'D
5	ECN 11473	12/01/98	BP	DRS	
4	ECN 10191A	9/24/96	AAJ	HAB	
3	ECN 10139	7/22/96	BP	HAB	
2	ECN TM 2358	6/24/96	JLH	DRS	
1	ECN-9752	04/23/96	SAB	HAB	JHK
0	ER#3092	10/19/94			JRH
A	REDRAWN ON NEW SHEET, REVISED PER AR-11 AND AS-BUILT.	9/26/94	TBC		

CUSTOMER: West Valley Nuclear Services Co., Inc.
LOCATION : West Valley, New York
ITEM NO. :
P.O. NO. : 19-68398-N-JK

TITLE
MELTER OFF-GAS CONTINUOUS MONITORING SYSTEM
P&ID - ENCLOSURE 64-I-004

ECOSPHERE
ENVIRONMENTAL INCORPORATED
4550 BAILEY AVENUE
BUFFALO, NEW YORK 14226-2138

JOB NO. 94-061		
BY tdc	DATE 4/25/94	SCALE NONE
CHECKED CZAJKA	NO. SHTS 1	LATEST REV. LETT. 5
REVIEWED ALLEN	SHT.NO. 1	
APPROVED CARR		

D-061-018

ACAD FILE: D061-018