VERIFY ALL DOCUMENTS FOR CURRENT REVISION AND PENDING CHANGES PRIOR TO EACH USE.
INIT_____ DATE_____

NO	DATE	REVISION	BY	CH	APPROVED		
0	4/28/93	ER2584			CCG		
1	5/6/93	REV PER ECN 6281	HJL	HAB	HAJ		
2	5/17/93	REV PER ECN	HJL	HAB	DJR		
3	12/02/94	REV PER ECN [illegible]-0238 & 190	BP	[illegible]	[illegible]		

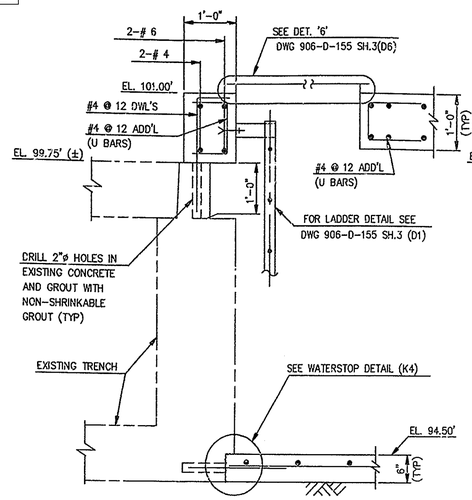

SECTION A-A 906-D-155 SH.1 (C6)
3/4"=1'-0

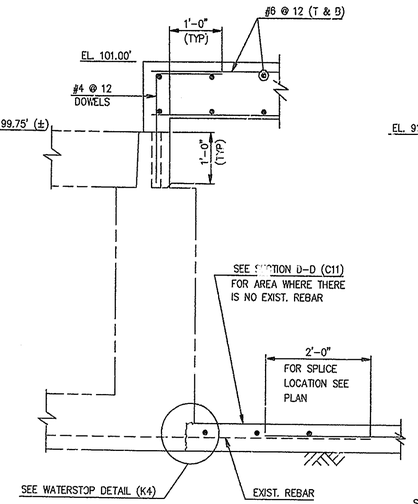

SECTION B-B 906-D-155 SH.1 (D6)
3/4"=1'-0

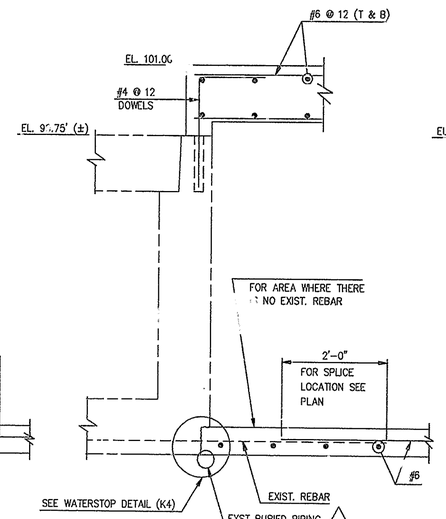

SECTION C-C 906-D-155 SH.1 (E8)
3/4"=1'-0

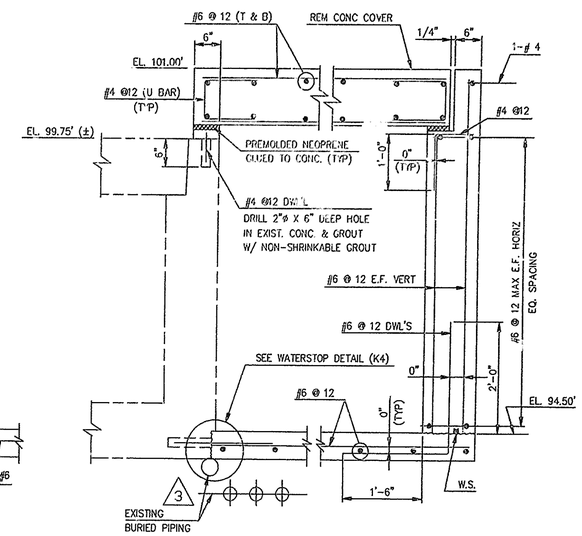

SECTION D-D 906-D-155 SH.1 (E10)
3/4"=1'-0

NOTES:

1. FOR NOTES AND REFERENCE DRAWINGS SEE DWG 906-D-155 SH. 1.

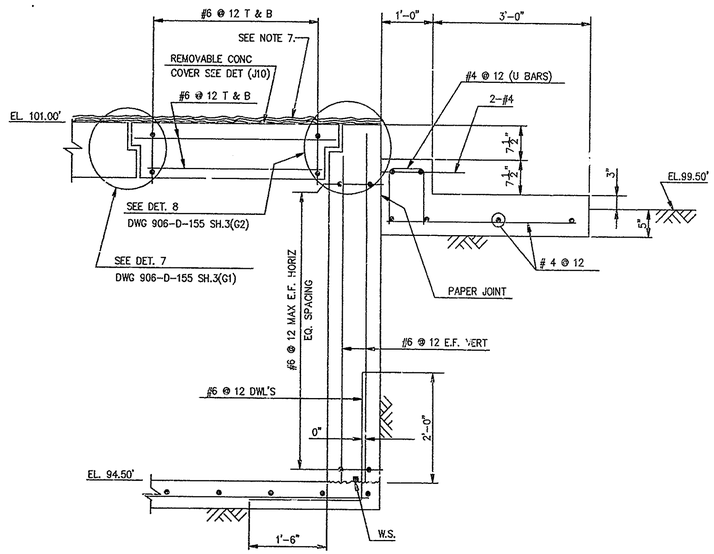

SECTION E-E 906-D-155 SH.1 (C9)
3/4"=1'-0

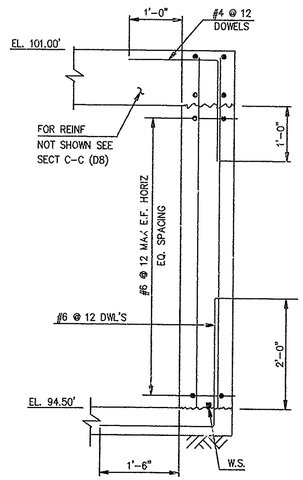

SECTION F-F 906-D-155 SH.1 (A9)
3/4"=1'-0

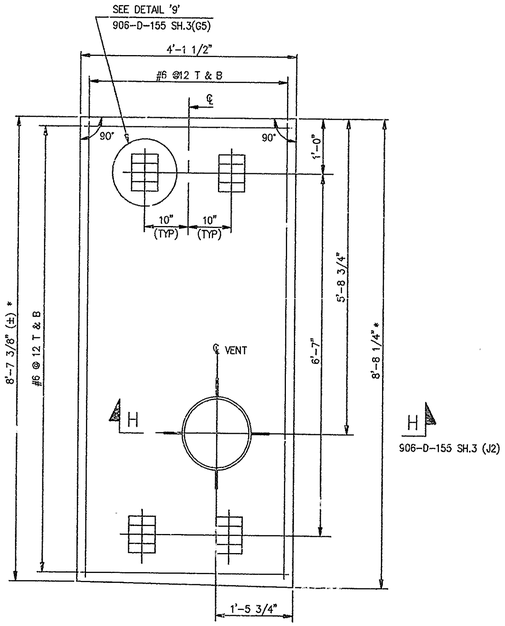

NOTE: * FIELD TO VERIFY DIM. BEFORE CONSTRUCTION

REMOVABLE CONCRETE COVER 906-D-155 SH.1 (F10)
3/4"=1'-0

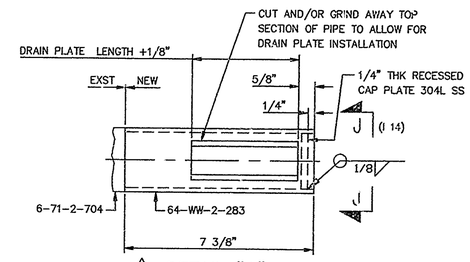

3 DETAIL "A"
NTS

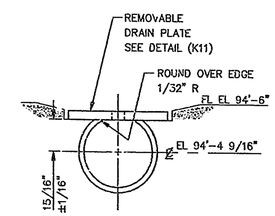

3 SECTION J-J (F 14)
NTS

WORK THIS DRAWING WITH DWG.906-D-155 SH. 1 AND SH.3

FOR DRAWING INDEX SEE DRAWING NO. _____

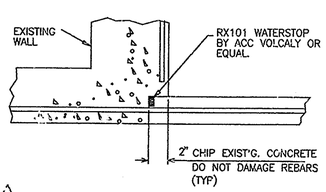

3 NEW SLAB TO EXISTING WALL

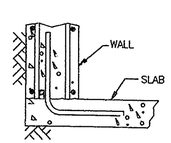

NEW SLAB TO NEW WALL

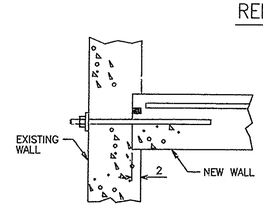

NEW WALL TO EXIST WALL

WATERSTOP DETAILS
NTS

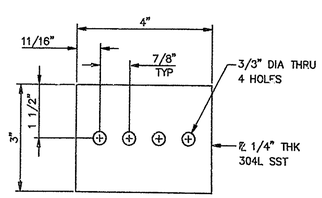

3 DRAIN PLATE DETAIL (I 14)
SCALE: NONE

F.J.B. STOREY	EBASCO SERVICES INCORPORATED A/E G.F.S. NO. 2388 FOR TASK ORDER 026
W. CHAO	WEST VALLEY NUCLEAR SERVICES COMPANY, II
LEAD DISC ENG W. CHAO	
DESIGN R. PARASHURAMA	VITRIFICATION FACILITY OFF--GAS TRENCH CONDENSATE PUMP PIT
J. CHIANA	SECTIONS AND DETAILS
DRAWN S.M.CUARNIERI 4-2-93	
ISSUED FOR CONSTRUCTION	AS NOTED

906D-155 3

906-D-155 SH.2 0

CAD FILE NAME : WVNS-PS.DWG DATE : 04/02/1993