VERIFY ALL DOCUMENTS FOR CURRENT REVISION AND PENDING CHANGES PRIOR TO EACH USE.
INIT_____ DATE_____

NORTH

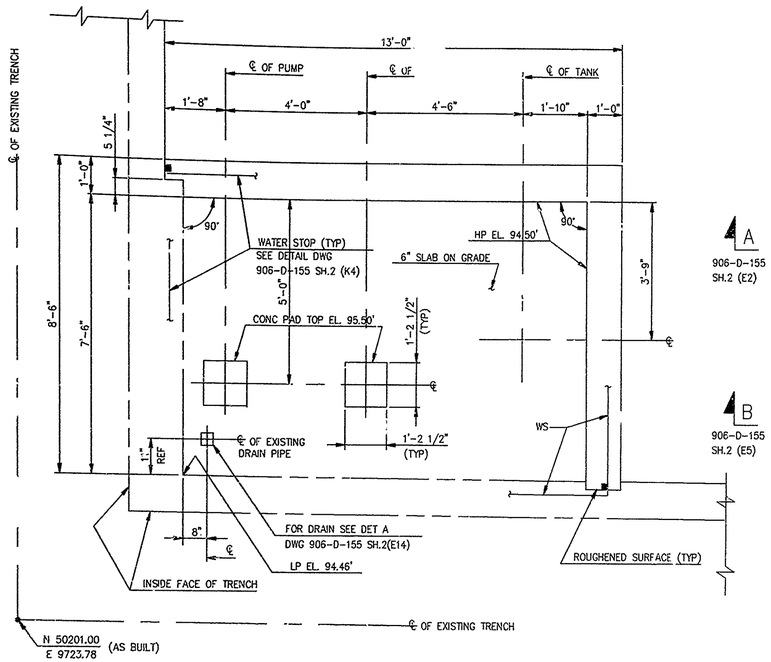

PLAN AT EL.94.50'

1/2"=1'-0

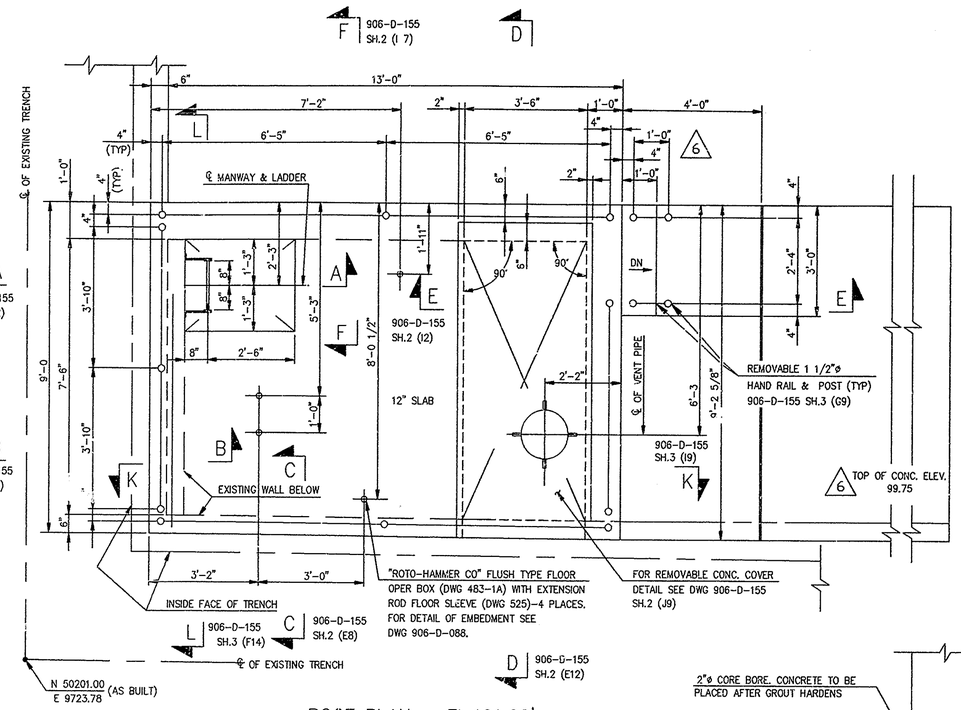

ROOF PLAN – EL.101.00'

LIVE LOAD ON CONC.= 200 PSF

1/2"=1'-0

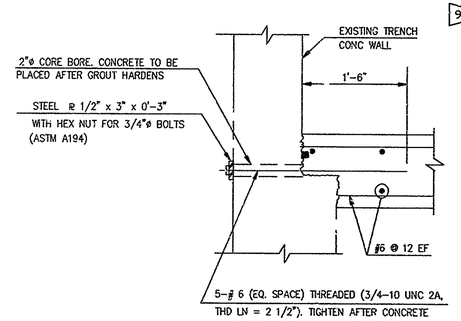

DETAIL '1' (G1)

NTS

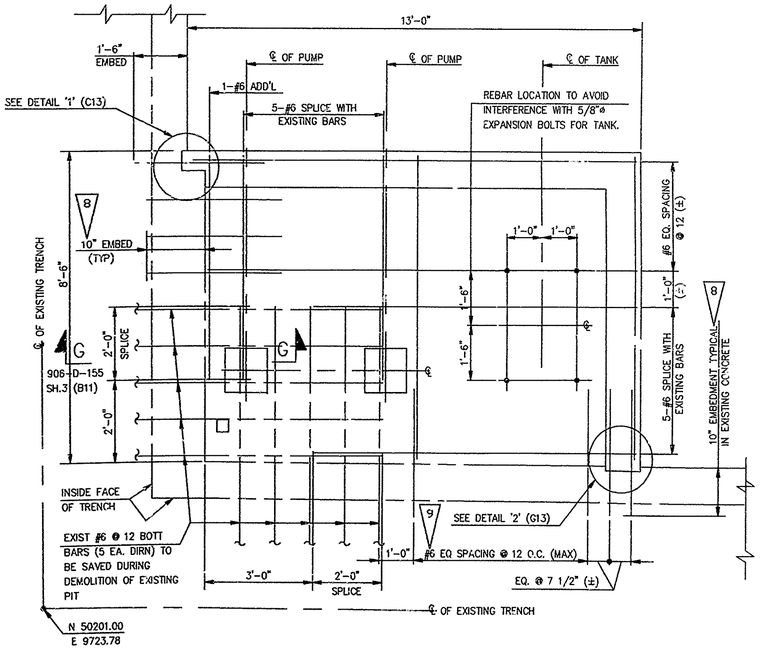

REINFORCEMENT AT EL.94.50'

1/2"=1'-0

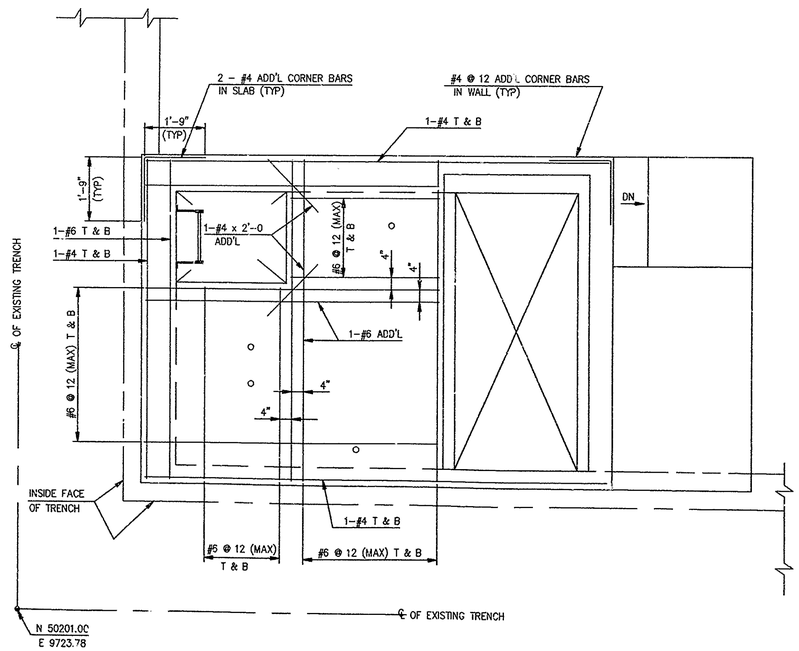

ROOF REINFORCEMENT AT EL.101.00'

1/2"=1'-0

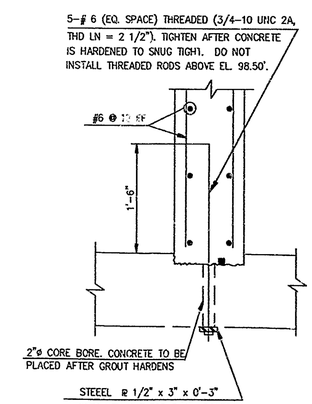

DETAIL '2' (J4)

NTS

NO	DATE	REVISION	BY	CH	APPROVED
0	4/28/93	ER2584			CCG
1	5/6/93	REV PER ECN 6281	HJL	HAB	HAJ
2	5/17/93	REV PER ECN 6290	HJL	HAB	DJR
3	11/11/94	REV PER FCN NOx-0046	MJL	GLS	JRY
4	12/02/94	REV PER FCN NOx-0238 & 190	BP	GLS	JRY
5	02/11/95	REV PER FCN NOx-0564	BP	GLS	HAJ
6	03/23/95	REV PER FCN NOx-0958	SAB	CB	MGM

NOTES:

1. FOR GENERAL NOTES SEE DWG. 906-D-100
2. FOR EXCAVATION, BACKFILL AND CONSOLIDATION REQUIREMENTS SEE SPECIFICATION NUMBER WVNS-CS-205.
3. VOLCLAY WATERSTOP-RX 101 BY AMERICAN COLLOID COMPANY OR APPROVED EQUAL SHALL BE PROVIDED AT ALL EXTERNAL CONSTRUCTION JOINTS BELOW GRADE.
4. BARRICADE PIT AND TRENCH OPENINGS DURING CONSTRUCTION.
5. FOR HAND RAILS AND POSTS SEE NOTES ON DWG 906-D-104.
6. WATERPROOFING OF BELOW GRADE WALLS SHALL BE DONE BY APPLYING COAL TAR EPOXY WATERPROOF COATING AS PER SPECIFICATION.
7. A BASE COAT OF BULLDOG ASPHALT PRIMER SHALL BE USED PRIOR TO INSTALLING OWENS/CORNING DERBIGUM ROOF COVERING. DERBIGUM SHALL BE CONTINOUS OVER THE ENTIRE ROOF SPAN; WITH EXCEPTION TO THE HATCH AND VENTILATION COVER.

8 ANCHOR #6 BARS TO EXST CONCRETE WITH HILTI HVA ADHESIVE ANCHOR. USE 10" EMBEDMENT INSTALL PER MANUFACTURERS INSTRUCTIONS. EMBEDMENT TO BE 10" BEYOND WATERSTOP. WATERSTOP TO BE PLACED AGAINST SOUND CONCRETE. CHIP MORE THAN 2" IF NECESSARY

9 INSTALL #6 BARS AT ELEVATION 94'-4 1/2'. BEND REBAR DOWN IF NECESSARY TO MAINTAIN MINIMUM COVER AND TO SPLICE WITH REBAR IN SLAB

REFERENCE DRAWINGS:

S.T.S.PIPE TRENCH EXTENSION & ALTERNATIONS PLAN & SECTIONS	906-D-1903 REV. 12
S.T.S. PIPE TRENCH EXTENSION &ALTERNATIONS SECT'S & DET'S	906-D-1904 REV. 7
VITRIFICATION FACILITY – PIPE TRENCH PLAN & DETAILS	905-D-121 REV. 7
VITRIFICATION FACILITY, OFF-GAS SYSTEM CIVIL GENERAL NOTES	906-D-100 REV. 0
VITRIFICATION FACILITY, MELTER EX-CELL OFF-GAS SYSTEM MISCELLANEOUS STEEL DETAILS	906-D-104 REV. 0
VF TRENCH REMOTE HANDLES	906-D-088
OFF GAS COND. STORAGE TANK	900-D-2724

WORK THIS DRAWING WITH DWG 906-D-155 SH. 2 & SH. 3

FOR DRAWING INDEX SEE DRAWING NO. _____

APPRVD WVNS CO.		EBASCO SERVICES INCORPORATED A/E O.F.S. NO. 2388 FOR TASK ORDER 026
PROJECT MGR P.J.E. STOREY	4-2-93	WEST VALLEY NUCLEAR SERVICES COMPANY, INC WEST VALLEY, NEW YORK
ENGINEER SUPV W. CHAO	4-2-93	WEST VALLEY DEMONSTRATION PROJECT VITRIFICATION FACILITY OFF-GAS TRENCH CONDENSATE PUMP PIT
LEAD DISC ENG W. CHAO	4-2-93	PLAN AND REINFORCEMENT
DESIGN R. PARASHURAMA	4-2-93	
CHECKED J. CHIANA	4-2-93	
DRAWN S.M.GUARNIERI	DATE 4-2-93	
DE-AC07-81NE44139 PROJECT NO.		SIZE D; INDEX CODE NUMBER AREA DR. TYP CL ORIG; DRAWING NO. 906D-155; REV. 6
19-CWV-02275 SUBCONTRACT NO.		
ISSUED FOR CONSTRUCTION		SCALE AS NOTED; SPEC. CODES; A/E SHEET NO. 906-D-155 SH.1 0

CAD FILE NAME : WVNS-PIT.DWG DATE : 04/02/1993