VERIFY ALL DOCUMENTS FOR CURRENT REVISION AND PENDING CHANGES PRIOR TO EACH USE.
INIT_____ DATE_____

906-D-154

NO	DATE	REVISION	BY	CH	APPROVED
0	8/27/91	ER 2172	JRH		
9	2/9/95	FCN NOx-0590	RAS	GLS	JHK
10	2/16/95	FCN NOx-0690	BP	GLS	JRY
11	3/21/95	FCN NOx-0976	RJW	GLS	MEM
8	12/21/94	PER FCN NOx-0425	KGZ	DRS	CR

SHEETROCK DETAIL (TYP)
SCALE: NONE

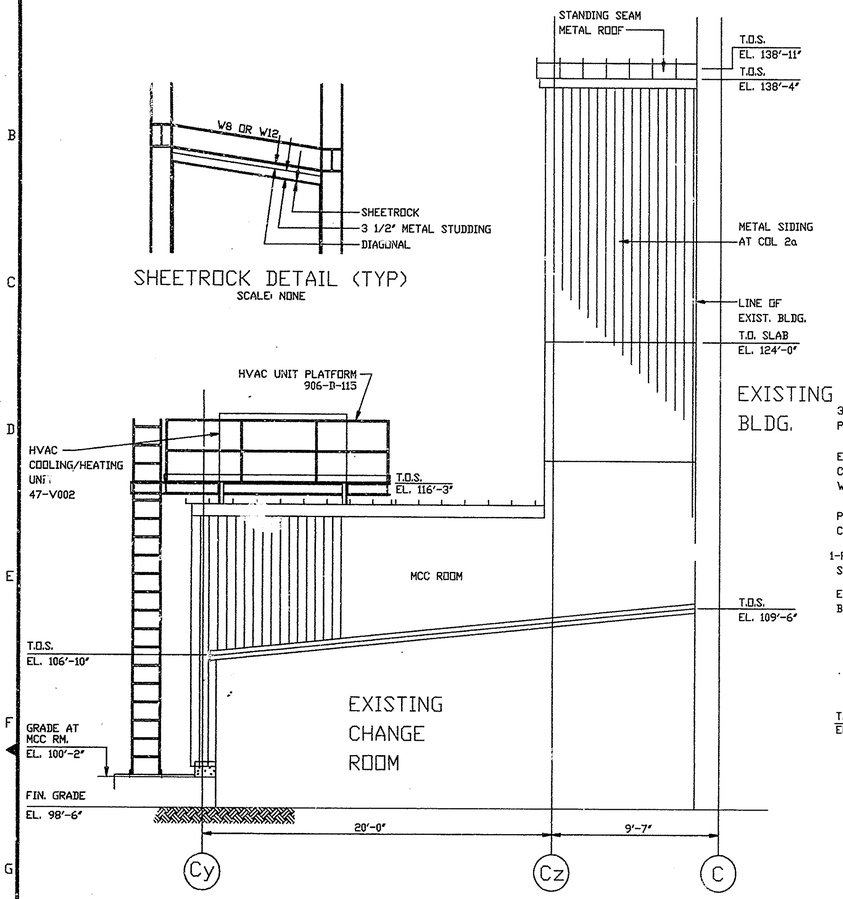

SOUTH ELEVATION

SCALE: 1/4" = 1'-0"

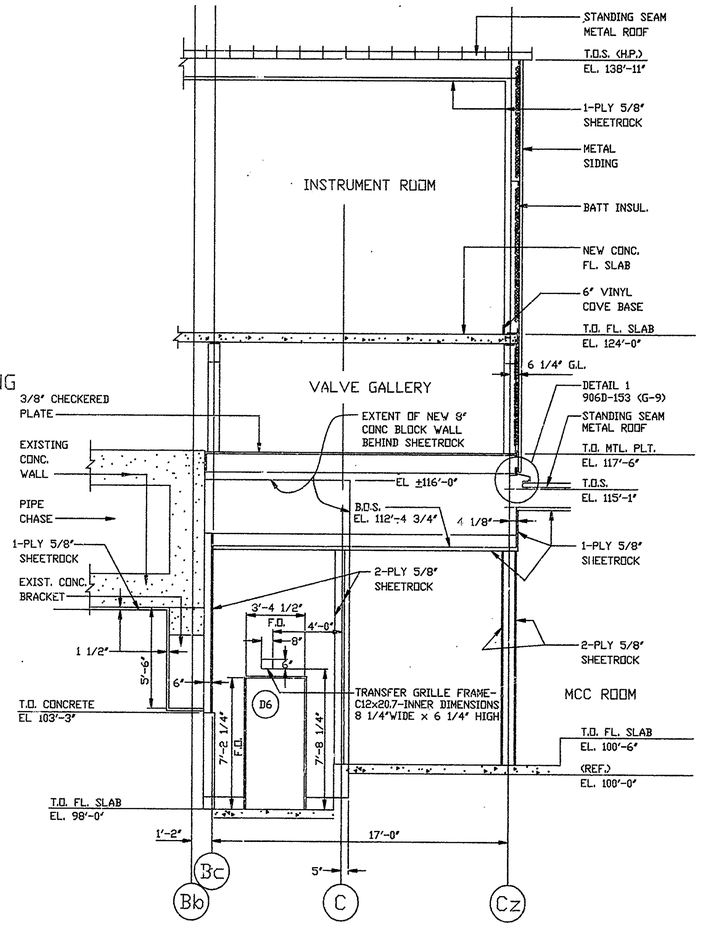

SECTION E-E

SCALE: 1/4" = 1'-0" 906D-150 SHEET 1 (E-4)

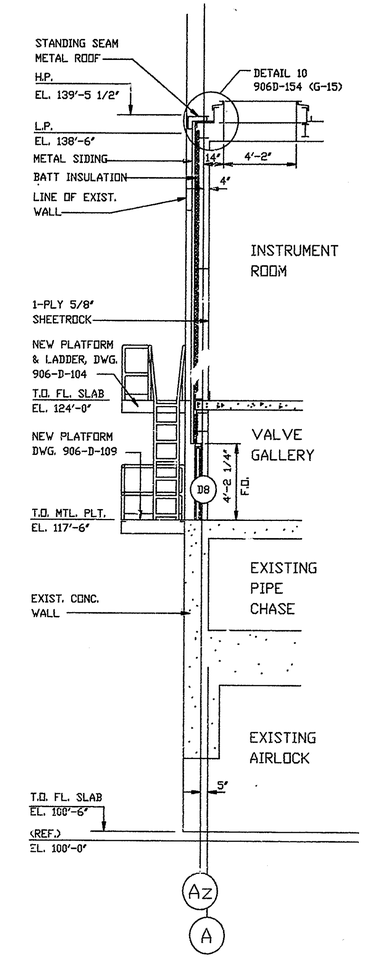

SECTION F-F

SCALE: 1/4" = 1'-0" 906D-150 SH 2 (A-5,A-10)

NOTES
FOR NOTES, SEE DWG. 906-D-150 SH.1
REFERENCE DRAWINGS
FOR REFERENCE DRAWINGS, SEE DWG. 906-D-150 SH.2

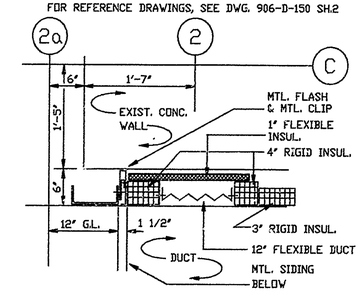

DETAIL - 2

SCALE: 1" = 1'-0" 906D-150 SH 1 (G-11)

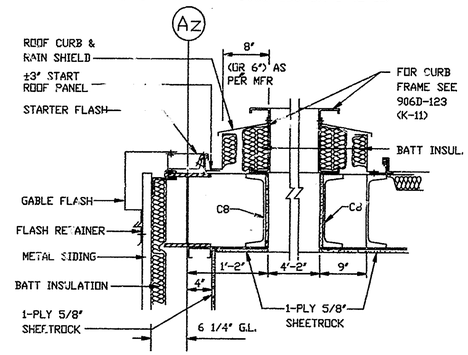

DETAIL - 10

SCALE: 1" = 1'-0" 906D-154 (A-13)
906D-150 SH 1 (K-11) SIMILAR

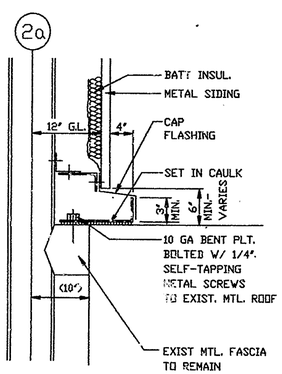

DETAIL - 7

SCALE: 1" = 1'-0" 906D-152 (G-3,G-16)

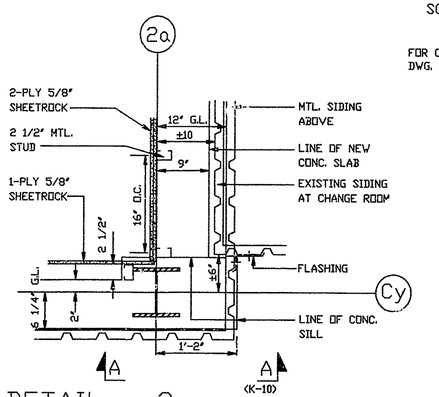

DETAIL - 3

SCALE: 1" = 1'-0" 906D-150 SHEET 1 (K-5)

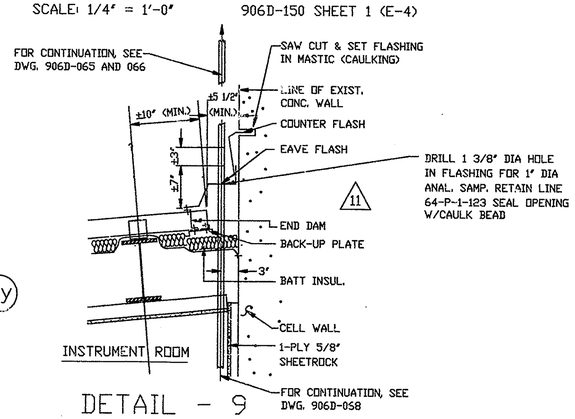

DETAIL - 9

SCALE: 1" = 1'-0" 906D-152 (B-10)

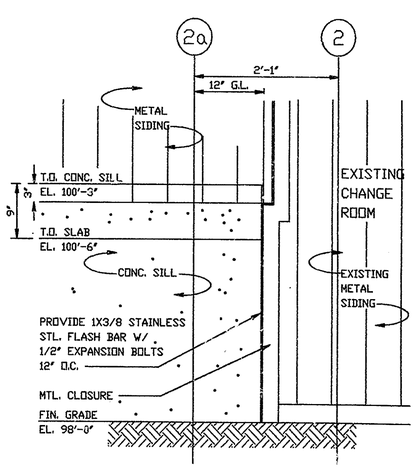

VIEW A-A

SCALE: 1" = 1'-0" 906D-154 (J-4)

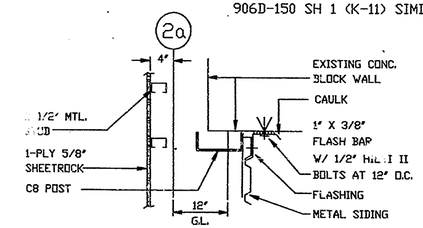

DETAIL - 6

SCALE: 1" = 1'-0" 906D-150 SHEET 2 (G-5)

APPRVD WVNS CO.		EBASCO SERVICES INCORPORATED
PROJECT MGR F. J. E. STOREY	12/10/90	A/E D.F.S. # 2388 FOR TASK ORDER 025
ENGINEER SUPV W. CHAO	12/10/90	WEST VALLEY NUCLEAR SERVICES COMPANY, INC WEST VALLEY, NEW YORK
LEAD DISC ENG K. ILACHINSKI	12/10/90	WEST VALLEY DEMONSTRATION PROJECT
DESIGN E. CHENG	12/10/90	VITRIFICATION FACILITY
CHECKED A. GROSS	12/10/90	OFF GAS SYSTEM
DRAWN E. CHENG	12/10/90	ARCHITECTURAL MISCELLANEOUS DETAILS
DE-AC07-81NE44139 PROJECT NO.		SIZE / INDEX CODE NUMBER (AREA, DR. TYP, CL, ORIG) / DRAWING NO. 906D-154 / REV. 11
19-CWV-02275 SUBCONTRACT NO.		
ISSUED FOR CONSTRUCTION		SCALE 1/4" = 1'-0" / SPEC. CODES / A/E SHEET NO. 906-D-154 A

ACAD FILE: C:PLAN02.DWG
DATE: 11/20/90 TIME: 10:08:20 INIT: E. CHENG
USER: 13 DISK: PLOT SCALE: 1" = 1'-0"

CAD DRAWING - DO NOT REVISE THIS ORIGINAL

PLOT SCALE 1=48