VERIFY ALL DOCUMENTS FOR CURRENT REVISION AND PENDING CHANGES PRIOR TO EACH USE.
INIT_____ DATE_____

906-D-153

NO	DATE	REVISION	BY	CH	APPROVED
0	8/27/91	ER 2172	JRH		
7	11/16/94	FCN NOX-0256	HAB	DRS	RPV
8	12/3/94	REV PER FCN NOx-0325	DMM	DRS	JRY
9	2/11/95	FCN NOx-0539 & NOX-0656	LRK	GLS	JHK MEM
10	3/14/95	FCN NOx-0904	BP	GLS	JHK
5	7/27/93	REV PER ECN 6568	DAK	HAB	HAJ
6	4/21/94	REV PER ECN 7385	AAJ	HAB	JHK

DOOR SCHEDULE

MARK	DWG. NO.	COOR.	FRAME DET.	FRAME DIM. W	FRAME HEAD	FRAME JAMB	SADDLE TYPE	SADDLE MTL.	DOOR TYPE	DOOR SIZE	DOOR MTL.	SWING	GLZG.	FIRE RTG.	REMARKS
D1	906-D-105	C5	E	5¾	HC	JC	R	ALUM.	II	3'-0 x 7'-0	HM.		¼ CLW		
D2	906-D-105	C3	E	5¾	HC	JC	R	ALUM.	II	2'-11½ x 7'-10	HM.		¼ CLW	B	
D3	906-D-150 SH1	J4	E	5¾	HAT	JA	R	ALUM.	I	3'-0 x 7'-0	HM.				SEE DETAIL (F-5)
D4	906-D-150 SH1	H3	E	5¾	HA	JA	R	ALUM.	I	3'-0 x 7'-0	HM.		¼ CLW	B	
D5	906-D-150 SH1	G3	E	5¾	HA	JA	R	ALUM.	II	3'-0 x 7'-0	HM.		¼ CLW	B	
D6	906-D-150 SH1	G5	E	5¾	HB	JB	R	ALUM.	II	3'-0 x 7'-0	HM.				
D7	906-D-150 SH1	F3	E	5¾	HA	JA	R	ALUM.	I	3'-0 x 7'-0	HM.				
D8	906-D-150 SH1	B10	E	5¾	HA	JA	R	ALUM.	I	2'-6 x 4'-0	HM.				
D9	906-D-150 SH2	B5	E	5¾	HA	JA	R	ALUM.	I	3'-0 x 7'-0	HM.				
D10	906-D-150 SH2	F5	E	5¾	HC	JC	R	ALUM.	II	2'-8 x 7'-10	HM.		¼ CLW	B	
D11	906-D-151	J6	E	5¾	HA	JA	R	ALUM.	I	(2) 2'-0 x 4'-4	HM.				LHR LF. ACTIVE
D12	906-D-151	B12	E	5¾	HA	JA	R	ALUM.	II	3'-0 x 7'-0	HM.				
D13	906-D-150 SH1	C4	E	5¾	HA	JA	R	ALUM.	II	3'-0 x 5'-10	HM.		¼ CLW	B	

LABEL A = > 1 HOUR FIRE RATING
LABEL B = > 2 HOUR FIRE RATING

HARDWARE SCHEDULE

MARK	LOCK	HINGE	CLO-SER	PANIC HDW		REMARKS
D1	L6	H1	● P	P6		AT
D2	L5	H1	●	P5		
D3	L6	H1	● P	P6		TRANSOM PANEL F.O. 9'-0"
D4	L6	H1	● P	P6		AT
D5	L6	H1	● P	P6		AT
D6	L5	H1	● P	P5		AT
D7	L6	H1	● P	P6		AT
D8	L3	H2	–	–		AT
D9	L6	H1	● P	P6		AT
D10	L5	H1	● P	P5		AT
D11	L3	HH1	–	–		FB-AT
D12	L6	H1	● P	P6		AT
D13	L6	H1	● P	P6		AT

DOOR TYPE:

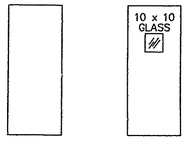

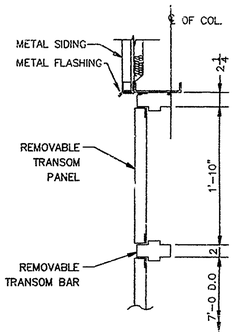

HAT – HEAD DETAIL
SCALE: 1" = 1'-0"

DOOR MARK NO.	GIRT LINE (IN.)	WALL LINE (IN.)
D3	6¼	4½
D4	6¼	4½
D5	6¼	4½
D7	7¼	3½
D8	6¼	N/A
D9	6¼	4
D11	8¼	2½
D12	8¼	2½

GIRT LINE TABLE
(G-4, I-3)

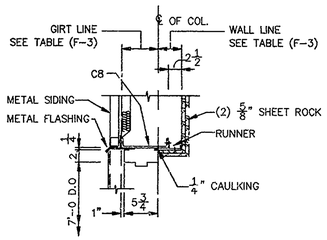

HA – HEAD DETAIL
SCALE: 1" = 1'-0"

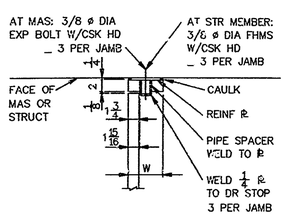

E – FRAME DETAIL

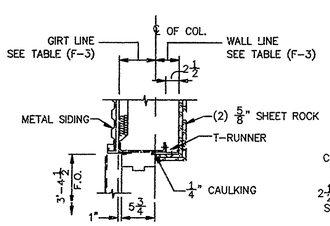

JA – JAMB DETAIL
SCALE: 1" = 1'-0"

SADDLE R
SCALE: 1½" = 1'-0"

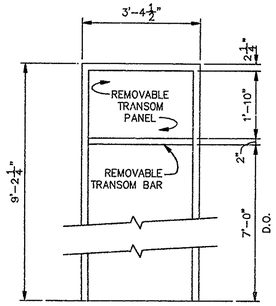

D3 – DETAIL
SCALE: N.T.S.

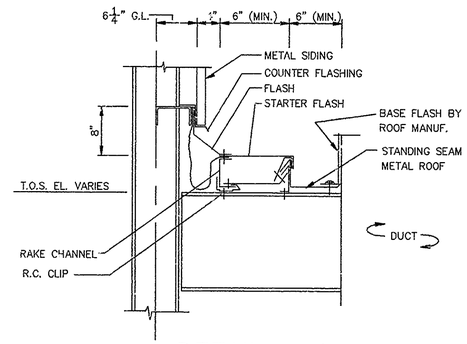

DETAIL – 1
SCALE: 1" = 1'-0" 906D-154 (E-10)

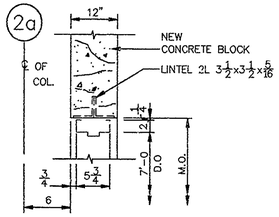

HB – HEAD DETAIL
SCALE: 1" = 1'-0" 906D-152 (F-13)

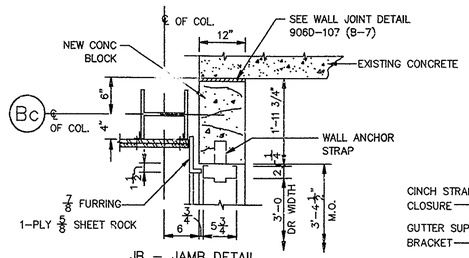

JB – JAMB DETAIL
SCALE: 1" = 1'-0" 906D-150 SH 1 (H-13)

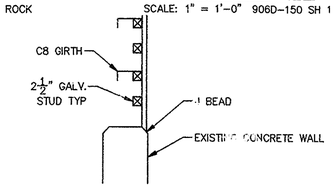

NOTES:
1 INSTALL STUDS HORIZONTALLY WITH VERTICAL SPACING NOT TO EXCEED 16 INCHES
2 ALL WORK PER CS-205
3 INSTALL VERTICAL SUPPORT AT MIDSPAN

SECTION X-X
906D-150(G-2)

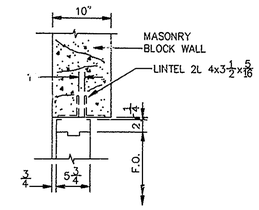

HC – HEAD DETAIL
SCALE: 1" = 1'-0" 906D-152 (F-13)

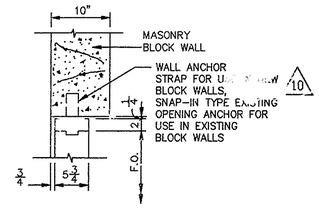

JC – JAMB DETAIL
SCALE: 1" = 1'-0" 906D-152 (F-13)

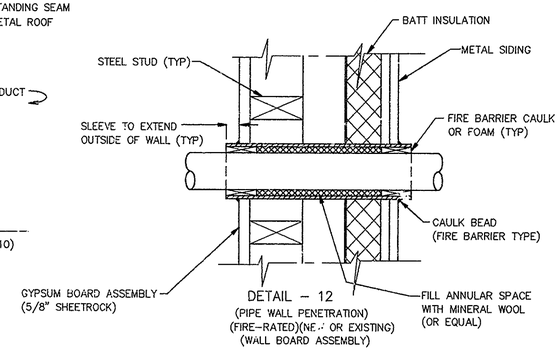

DETAIL – 12
(PIPE WALL PENETRATION)
(FIRE-RATED)(NEW OR EXISTING)
(WALL BOARD ASSEMBLY)

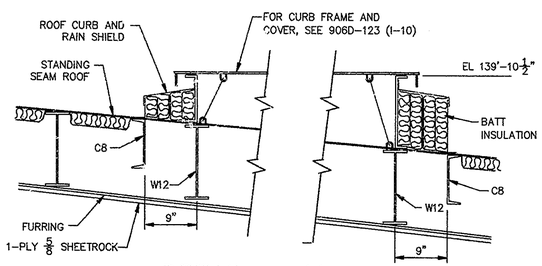

DETAIL – 11
906D-152 (B-8)

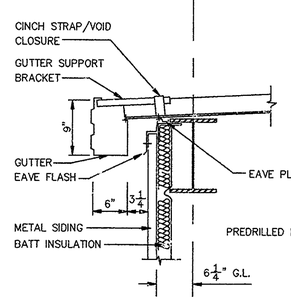

DETAIL – 8
SCALE: 1" = 1'-0" 906D-152 (B-2 & B-7)

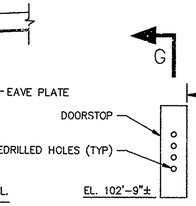

DETAIL – 14
SCALE: 1½" = 1'-0" 906D-150(E-4)

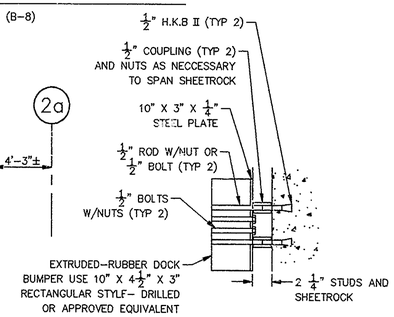

SECTION G-G
SCALE: 1½" = 1'-0" (K-11)

NOTES
FOR NOTES, SEE DWG. 906-D-150 SH.1

REFERENCE DRAWINGS
FOR REFERENCE DRAWINGS, SEE DWG. 906-D-150 SH.2

HARDWARE SCHEDULE

CYLINDERS
MANUFACTURED BY: BEST
DESIGN: SERIES 1E74/72
FINISH: 26D, DULL CHROMIUM W/ BASE MATERIAL OF BRASS/BRONZE

LOCK & LATCH
MANUFACTURED BY: SARGENT
DESIGN: 7700 WITH OB DESIGN TRIM
FINISH: 26D
TYPE: L1 – 86N – 7715-OB – LATCH
L2 – 86N – 7737-OB – OUTER KNOB BY KEY
L5 – SEE EXIT DEVICE P5
L6 – SEE EXIT DEVICE P6

EXIT DEVICES / PN HW
MANUFACTURED BY: SA[illegible]
DESIGN: SERIES 89[illegible]
FINISH: 32D/26D
TYPE: P5 – 89[illegible] – LATCH ONLY
P6 – 891[illegible] – OUTER KNOB BY KEY

HINGES
MANUFACTURED BY: STANLEY
DESIGN: STEEL BALL BEARING, FULL MORTISE TEMPLATE – FBB179
FINISH: P-STEEL
H1 – 4½ x 4½ – 1½ PR
HH1 – 4½ x 4½ – 1½ PR PER LEAF (HH INDICATES DBL DOORS)
H2 – 4½ x 4½ – 1 PR

CLOSERS
MANUFACTURED BY: SARGENT
DESIGN: 1230 SERIES, SUFFIX P – PARALLEL ARM
FINISH: EN – ALUMINUM ENAMEL

FLUSH BOLTS – ALL INACTIVE LEAFS
MANUFACTURED BY: IVES
DESIGN: 458 W/ 12" LONG ROD, 439 DUST-PROOF STRIKES
FINISH: 26D, DULL CHROMIUM

WEATHERSTRIPPING – AT
MANUFACTURED BY: PEMKO
DESIGN: 375CR, 434AR, 430CR
FINISH: AL – ALUMINUM EXTRUSION
TYPE: 375CR – SURFACE ASTRIGAL
433AR – MORTISE TYPE
430CR – SURFACE TYPE – HEAD & JAMB

THRESHOLD
MANUFACTURED BY: PEMKO
DESIGN: 177A
FINISH: AL – ALUMINUM EXTRUSION
TYPE: R

FOR DRAWING INDEX SEE DRAWING NO. _____

APPRVD WVNS CO.		EBASCO SERVICES INCORPORATED A/E O.F.S. NO. 2388 TASK ORDER 025 FOR
PROJECT MGR F. J. E. STOREY	12/10/90	WEST VALLEY NUCLEAR SERVICES COMPANY, INC WEST VALLEY, NEW YORK
ENGINEER SUPV W. CHAO	12/10/90	WEST VALLEY DEMONSTRATION PROJECT
LEAD DISC ENG K. ILACHINSKI	12/10/90	VITRIFICATION FACILITY
DESIGN E. CHENG	12/10/90	OFF GAS SYSTEM
CHECKED A. GROSS	12/10/90	ARCHITECTURAL DR., FIN. RM. SCHDLS. & MISC. DETS.
DRAWN E. CHENG	12/10/90	
DE-AC07-81NE44139 PROJECT NO.		SIZE / INDEX CODE NUMBER (AREA, DR. TYP, CL, ORIG) / DRAWING NO. 906D-153 / REV. 10
19-CWV-02275 SUBCONTRACT NO.		
ISSUED FOR CONSTRUCTION		SCALE VARIES / SPEC. CODES / A/E SHEET NO. 906-D-153

CAD FILE NAME : DR_SCHLDWG DATE : 12/07/1990
PLOT SCALE : 1 = 48 TIME : 12:35:55
USSER = 13

CAD DRAWING – DO NOT REVISE THIS ORIGINAL

PLOT SCALE 1=48