VERIFY ALL DOCUMENTS FOR CURRENT REVISION AND PENDING CHANGES PRIOR TO EACH USE.
INIT_____ DATE_____

906-D-151

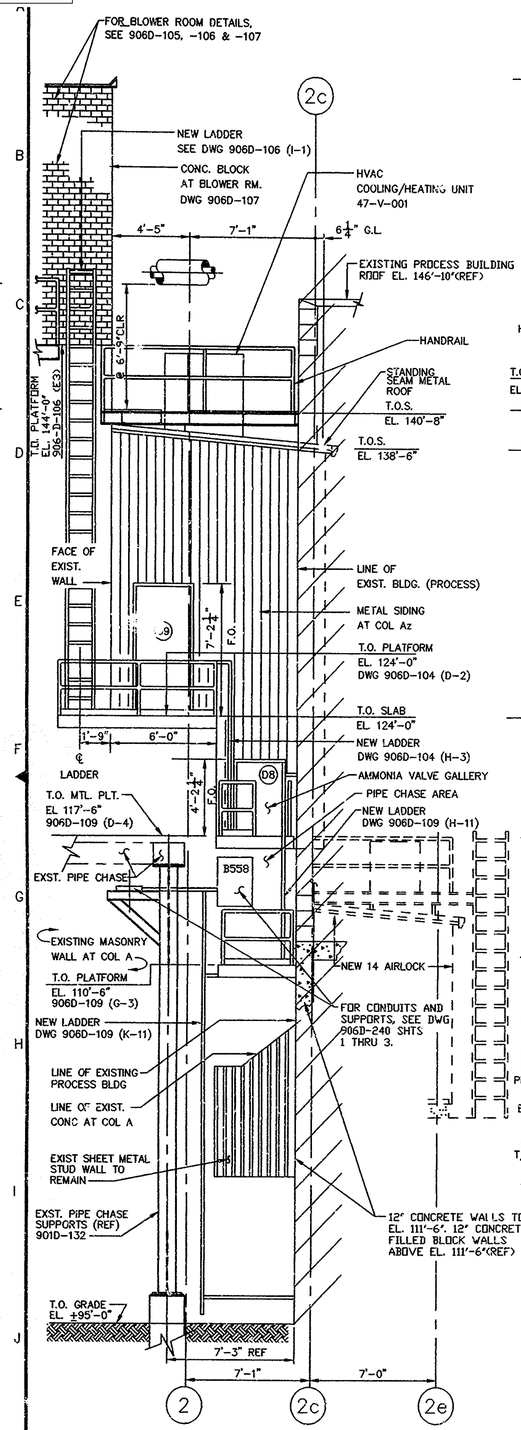

EAST ELEVATION

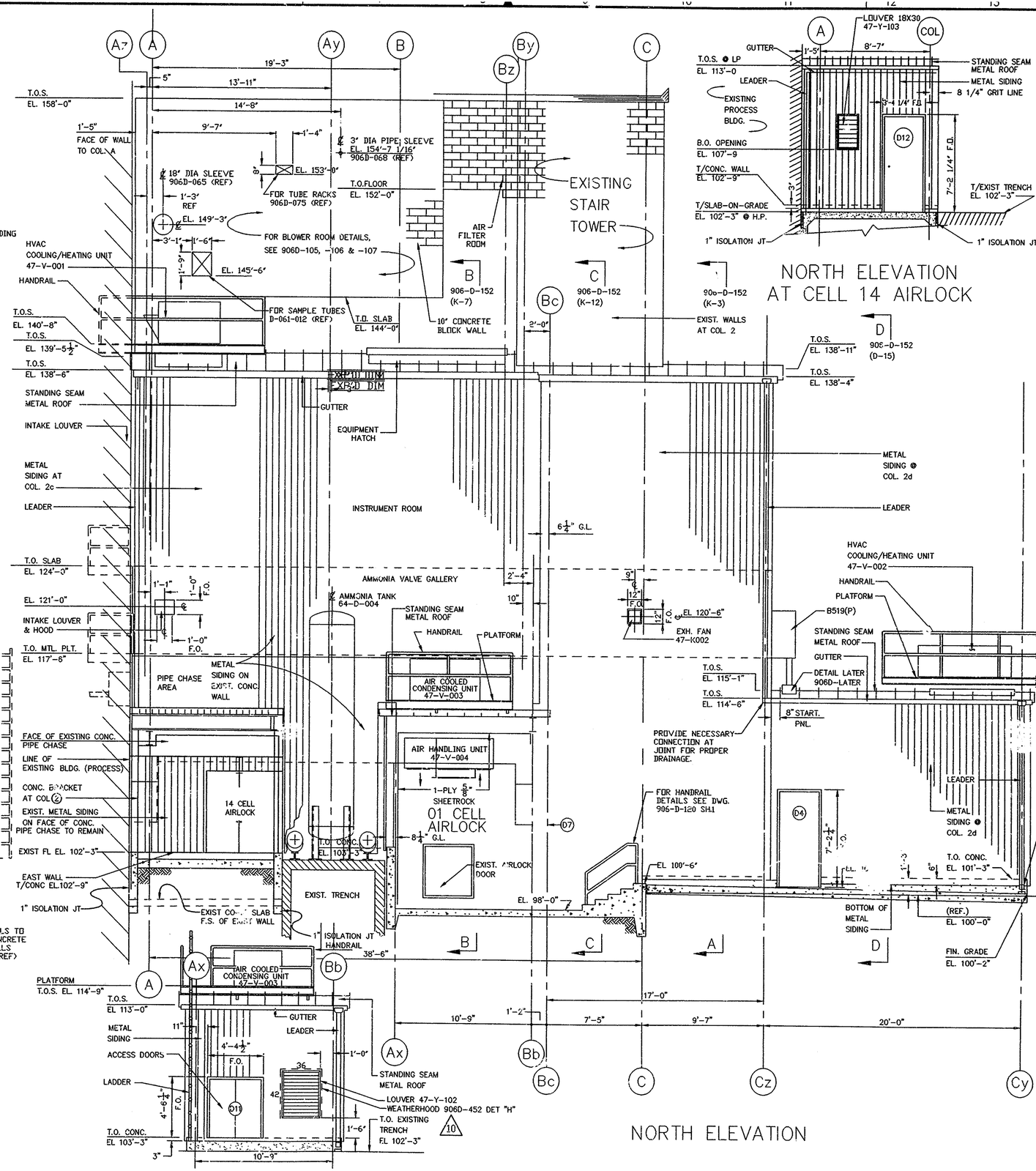

NORTH ELEVATION AT 01 CELL AIRLOCK

NORTH ELEVATION

NORTH ELEVATION AT CELL 14 AIRLOCK

NO	DATE	REVISION	BY	CH	APPROVED
0	8/27/91	ER 2172	JRH		
10	1/29/96	REV PER FCN TM-1828	DAK		
2	3/29/93	GEN REV PER ECN 6135	SRC	HAB	TEC
3	5/3/93	GEN REV PER ECN 6284	HJL	HAB	TEC
4	5/12/93	REV PER ECN 6290	HJL	HAB	DJR
5	7/27/93	REV PER ECN 6568	DAK	HAB	HAJ
6	7/14/94	REV PER ECN 7880	LRK	KQ	JHK
7	11/14/94	REV PER ECN 8259	AAJ	GLS	JHK
8	12/1/94	REV PER FCN-NOX-0229	CCG	DRS	CR
9	1/19/95	FCN-NOX-0519 & -0554	WCK	GLS	JHK

NOTES
FOR NOTES, SEE DWG 906D-150 SHEET 1

REFERENCE DRAWINGS
FOR REFERENCE DRAWINGS, SEE DWG 906D-150 SHEET 2

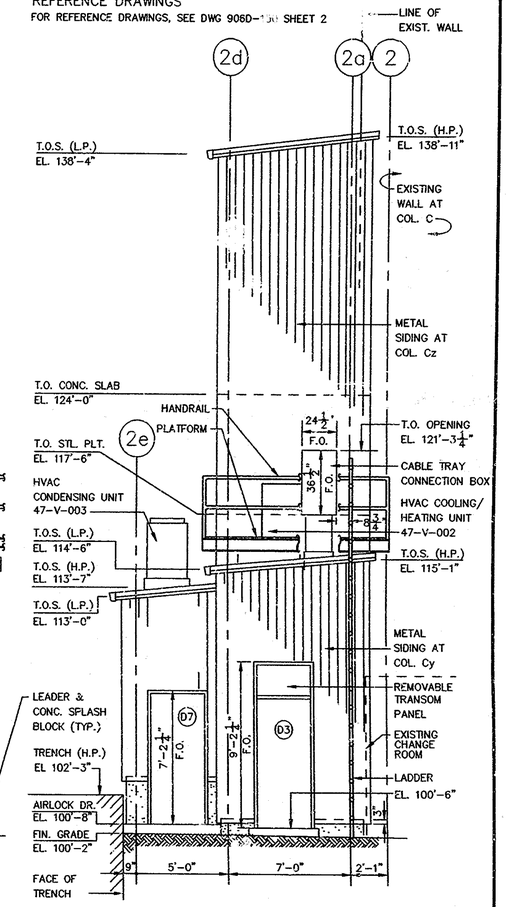

WEST ELEVATION

APPRVD WMS CO.		EBASCO SERVICES INCORPORATED
PROJECT MGR F. J. E. STOREY	12/10/90	A/E O.F.S. NO. 2388 TASK ORDER 025
ENGINEER SUPV W. CHAO	12/10/90	FOR WEST VALLEY NUCLEAR SERVICES COMPANY, INC WEST VALLEY, NEW YORK
LEAD DISC ENG K. ILACHINSKI	12/10/90	WEST VALLEY DEMONSTRATION PROJECT
DESIGN E. CHENG	12/10/90	VITRIFICATION FACILITY
CHECKED A. GROSS	12/10/90	OFF GAS SYSTEM
DRAWN E. CHENG	12/10/90	ARCHITECTURAL ELEVATIONS & DETAILS
DE-AC07-81NE44139 PROJECT NO.		SIZE / INDEX CODE NUMBER (AREA, DR. TYP, CL, ORIG) / DRAWING NO. 906D-151 / REV. 10
19-CWV-02275 SUBCONTRACT NO.		
ISSUED FOR CONSTRUCTION		SCALE 1/4" = 1'-0" / SPEC. CODES / SHEET NO. 906-D-151 A

ACAD FILE : C:ELEVOLD.DWG
DATE : 11/20/90 TIME : 10:08:20 INIT: E. CHENG
USER: 13 DISK : PLOT SCALE: 1/4" = 1'-0"
13HD001 1=48.00

PLOT SCALE 1=48