VERIFY ALL DOCUMENTS FOR CURRENT REVISION AND PENDING CHANGES PRIOR TO EACH USE.
INIT_____ DATE_____

906-D-150 SH.2

N

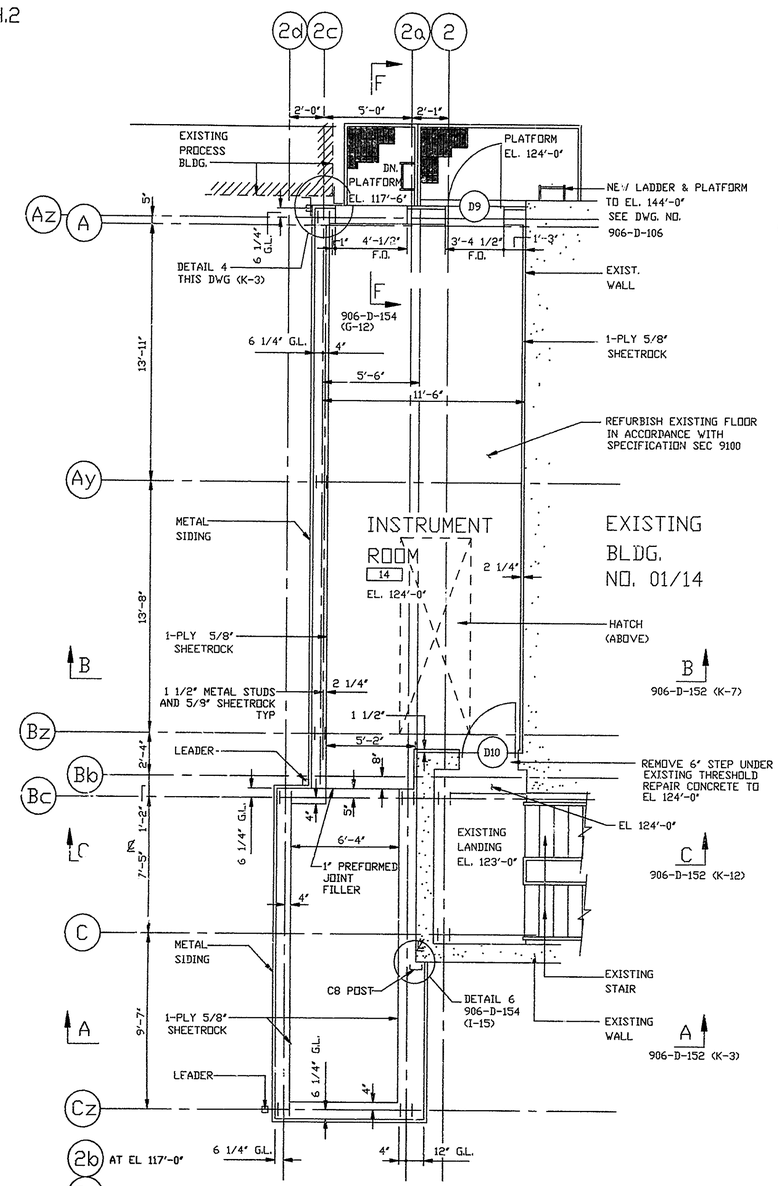

PLAN OF INSTRUMENT ROOM
EL. 124'-0"

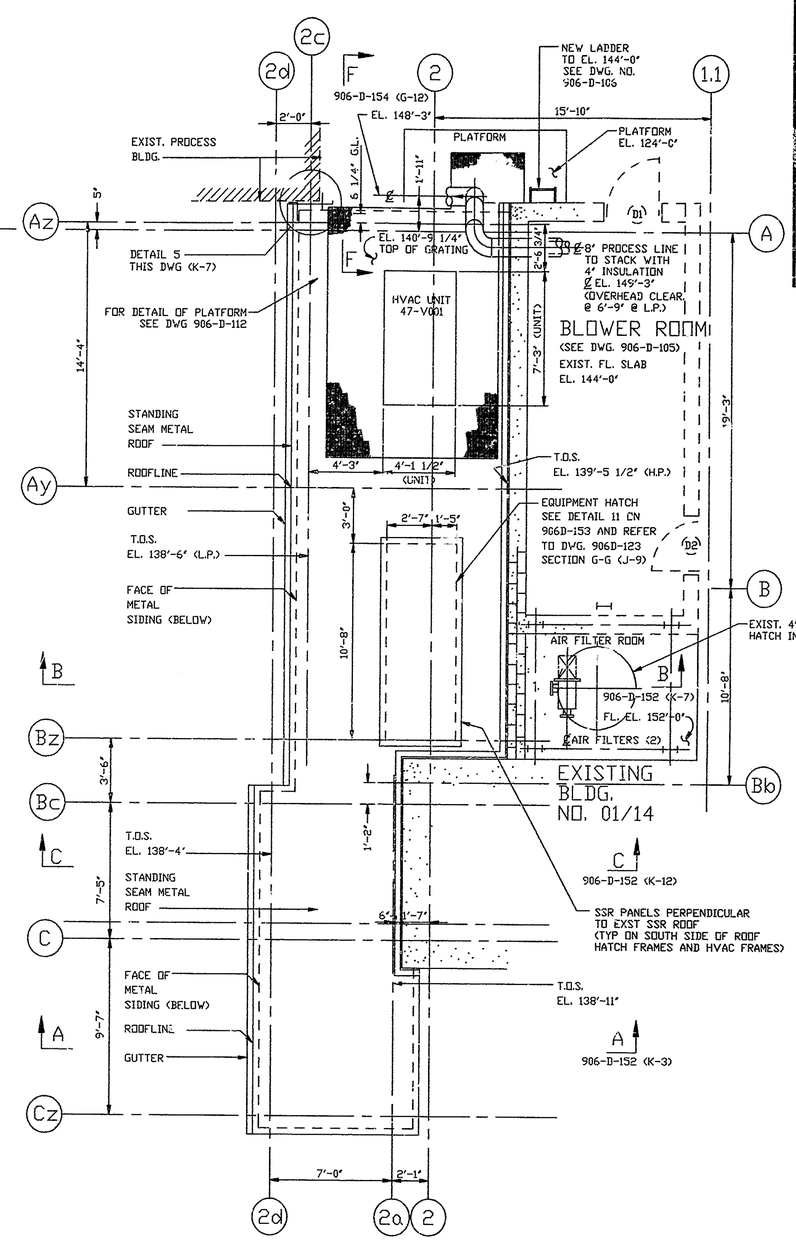

ROOF PLAN
INSTRUMENT ROOM

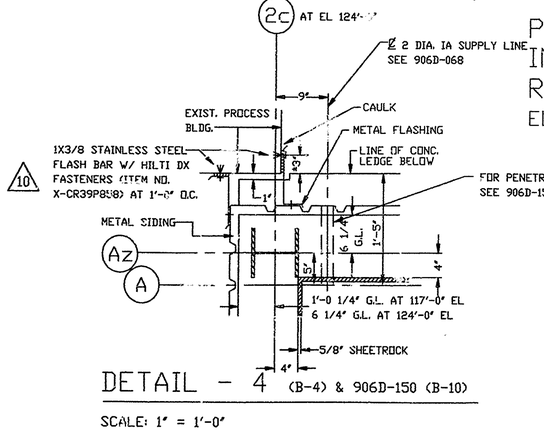

DETAIL - 4 (B-4) & 906D-150 (B-10)

SCALE: 1" = 1'-0"

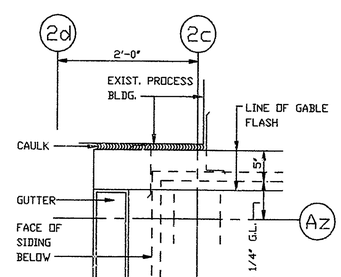

DETAIL - 5 (B-10)

SCALE: 1" = 1'-0"

NO	DATE	REVISION	BY	CH	APPROVED
0	8/27/91	ER 2172	JRH		
9	02/11/95	FCN NOx-0575 & NOx-0596	BP	GLS	JHK
10	3/9/95	FCN NOx-0862	SAB		JHK
3	5/12/93	PER ECN 6290	HJL	HAB	DJL
4	7/27/93	PER ECN 6568	DAK	HAB	HAJ
5	4/20/94	PER ECN 7385	AAJ	HAB	JHK
6	7/11/94	PER ECN 7880	LRK	KQ	JHK
7	12/3/94	REV PER FCN NOx-0320 & NOx-0325	DMM	DRS	JRY
8	12/28/94	PER FCN NOx-0482	JHS	GLS	CR

NOTES

FOR NOTES, SEE DWG 906D-150 SHEET 1

REFERENCE DRAWINGS

ARCHITECTURAL

ARCHITECTURAL PLANS AND DETAILS	906-D-150 SH.1
ARCHITECTURAL PLANS AND DETAILS	906-D-150 SH.2
ARCHITECTURAL ELEVATIONS AND DETAILS	906-D-151
ARCHITECTURAL SECTIONS	906-D-152
ARCHITECTURAL - DOOR, FIN. RM. SCHEDULES & DETAILS	906-D-153
ARCHITECTURAL - MISCELLANEOUS DETAILS	906-D-154

CIVIL

V.F. - MELTER EX-CELL OFF GAS SYSTEM INSTRUMENT ROOM	906-D-103
V.F. - MELTER EX-CELL OFF GAS SYSTEM MISC. STEEL DETAILS	906-D-104
V.F. - BLOWER ROOM DRAWINGS	906-D-105 TO 906-D-107
V.F. - 01/14 BLDG. VALVE GALLERY AND PIPE CHASE MODIFICATION	906-D-108 TO 906-D-109
V.F. - STAIRWELL & MCC ENCLOSURE	906-D-117 TO 906-D-119
V.F. - 01 CELL AIRLOCK	906-D-122
V.F. - OFF GAS INSTRUMENT ROOM	906-D-123

ELECTRICAL

V.F. - MELTER EX-CELL OFF GAS SYSTEM - CONDUIT & TRAY LAYOUT - MCC ROOM INSTR. ROOM & MISC. AREAS	906-D-230 (SH1 - SH3)
V.F. - MELTER EX-CELL OFF GAS SYSTEM - WEST FACE 01/14 BLDG. - PLAN & SECTIONS	906-D-233

HVAC

V.F. - MELTER EX-CELL OFF GAS SYSTEM VENTILATION & SUPPLY	906-D-400 TO 906-D-454

GENERAL ARRANGEMENT

V.F. - GENERAL ARRANGEMENT DRAWINGS	906-D-030 TO 906-D-038

APPRVD WVNS CO		EBASCO SERVICES INCORPORATED
PROJECT MGR F. J. E. STOREY	12/10/90	A/E O.F.S. NO. 2388 FOR TASK ORDER 025
ENGINEER SUPV W. CHAO	12/10/90	WEST VALLEY NUCLEAR SERVICES COMPANY, INC WEST VALLEY, NEW YORK
LEAD DISC ENG K. ILACHINSKI	12/10/90	WEST VALLEY DEMONSTRATION PROJECT
DESIGN E. CHENG	12/10/90	VITRIFICATION FACILITY
CHECKED A. GROSS	12/10/90	OFF GAS SYSTEM
DRAWN E. CHENG	12/10/90	ARCHITECTURAL PLANS & DETAILS
DE-AC07-81NE44139 PROJECT NO. 19-CWV-02275 SUBCONTRACT NO.		SIZE / INDEX CODE NUMBER (AREA, DR. TYP, CL, ORIG) / DRAWING NO. 906D-150 / REV. 10
ISSUED FOR CONSTRUCTION		SCALE 1/4" = 1'-0" / SPEC. CODES / A/E SHEET NO. 906-D-150 SH.2 A

ACAD FILE OPLAN02.DWG
DATE : 11/20/90 TIME : 100820 INIT: E. CHENG
USER: 13 DISK : PLOT SCALE:1" = 1'-0"

F1500002 1=48.00

PLOT SCALE 1=48

CAD DRAWING - DO NOT REVISE THIS ORIGINAL