VERIFY ALL DOCUMENTS FOR CURRENT REVISION AND PENDING CHANGES PRIOR TO EACH USE.
INIT_____ DATE_____

906-D-105

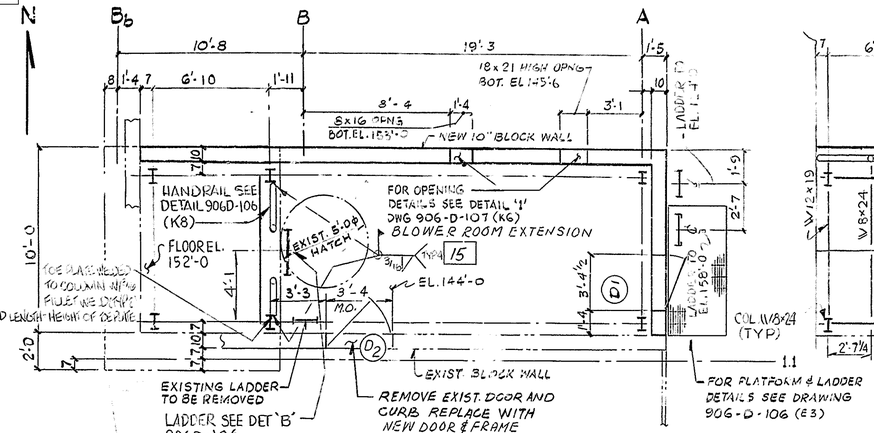

PLAN AT EL. 144'-0 & 152'-0
1/4" = 1'-0

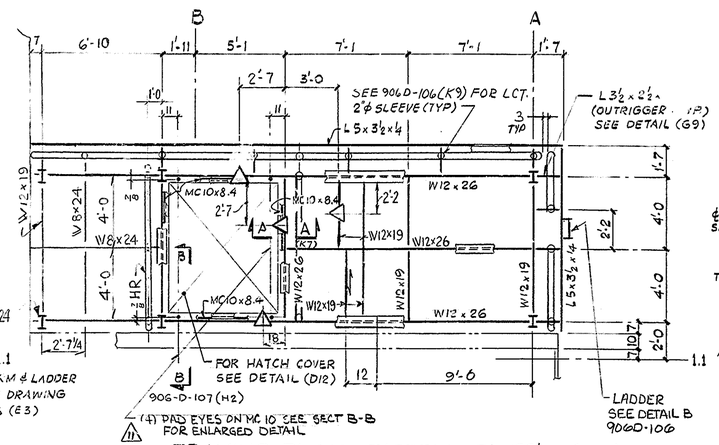

FRAMING PLAN - T/STEEL EL. 158'-0 (U.N.)
1/4" = 1'-0
△ SEE DETAIL 'F' FOR STIFFENING (G13)

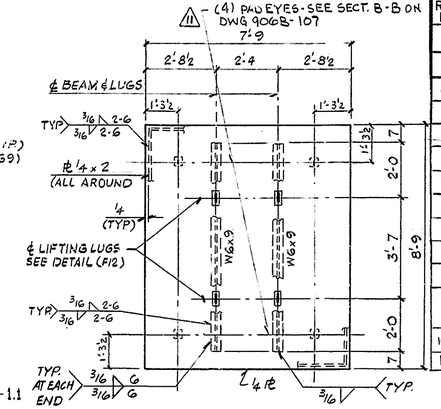

NOTE: HATCH COVER TO BE INSULATED WITH 3½" THK (12"x18" BLOCK FORM) FORMGLAS - INSULATION AS MANUFACTURED BY PITTSBURGH CORNING OR APPROVED EQUAL. THESE INSULATION BLOCKS SHALL BE FULLY ADHERED TO THE UNDERSIDE OF THE HATCH COVER W/ PITTS-CORNING PC88 ADHESIVE AND JENCO 4½" PERFORATED ANCHOR WITH JENCO SELF-LOCKING WASHERS AND STICK-CLIP ADHESIVE ANCHORS TO BE SPACED PER MANUFACTURERS RECOMMENDATIONS.

HATCH COVER DETAIL (C8) 3/8" = 1'-0

REV NO	DATE	REVISION	DR	CH	APPROVED			
B	9-23-90	REVISED AS CIRCLED & PER EBAR No. 1516 & TA No. 1135	V.S.					
C	11-8-90	REVISED PER EBAR "1516A"						
0	8/27/91	ER 2172						
1	9-17-91	REV/ECN 4523						
2	4-30-93	REV PER ECN 6284	GW	HB				
3	5-12-93	REVISED PER ECN 6290	EHB	HB				
4	11-30-93	REV PER ECN 7074	GW	HB	R.S.			
5	8-18-93	REV/ECN 8112	PD					
6	11-17-94	REV/ECN NOX-0285	JH	GB				
7	12-02-94	NOX-0263, 0305, 0215	HB					
8	12-29-94	REV/ECN NOX-0282-0486						
9	2-9-95	REV/ECN'S NOX-0611, NOX-0580, NOX-0633, NOX-0557, NOX-0616, NOX-0581, NOX-0606	PD					
10	3-9-95	REV/ECN NOX-0584, 0575, 0623, 0609						
11	3-23-95	ECN NOX-0881	GW					

NOTES:
1. FOR GENERAL NOTES SEE DWG 906-D-100.
2. WORK THIS DRAWING WITH DWGS 906-D-106 & 107.
3.
4. FOR DOOR DETAILS SEE DOOR SCHEDULE ON DWG. 906-D
5. FOR THE SOUTH WEST HILTI BOLT, THE ALLOWABLE N. SPACING WEST OF CENTERLINE IS 2".
6. ALL ANCHOR BOLTS TO BE TIGHTENED TO SNUG CONDITION STRUCTURAL BOLTS TO BE TORQUED TO AISC REQUIREMENTS.

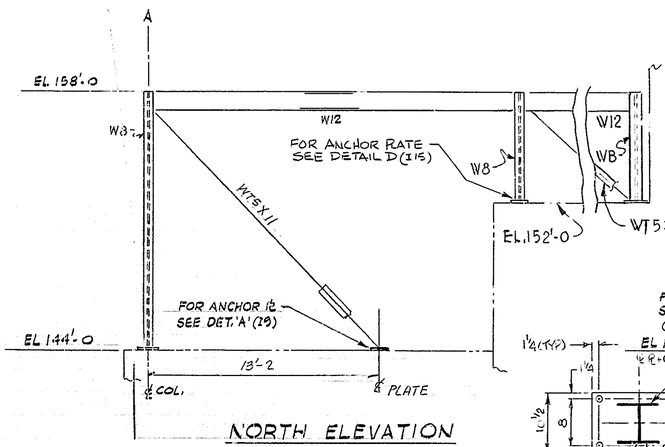

NORTH ELEVATION
(LOOKING SOUTH)
1/4" = 1'-0

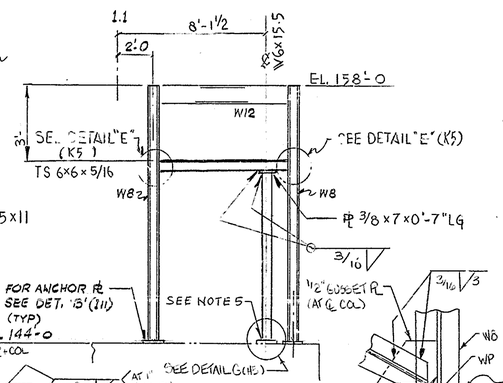

EAST ELEVATION
(LOOKING WEST)
1/4" = 1'-0

DETAIL G (G7)
NTS

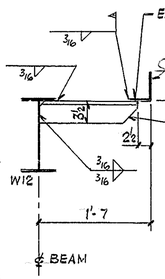

NOTES:
- OUTRIGGER CONNECTION TO COLUMN IS SIMILAR.
- 2 ϕ SLV FOR HR POST NOT SHOWN FOR CLARITY. SEE DWG 906D-106 (K9).

OUTRIGGER DETAIL (A10)
1" = 1'-0

DETAIL H (J4)
NTS

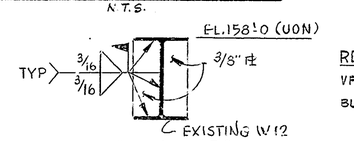

DETAIL "F" (D7)
LOCAL STIFFENING

REFERENCE DRAWINGS:

VF-MELTER EXCELL OFF GAS SYSTEM - INST. RM	906-D-103 & 104
BLAW-KNOX DWGS:	
STRUCTURAL FRAMING	2401-01-801-23
ROOF PLAN	2401-01-801-53
ARCH. DETAILS	2401-01-801-54

V.F.-OFF GAS SYSTEM ARCH. DET'S, DOOR & FINISH SCH. 906-D-153

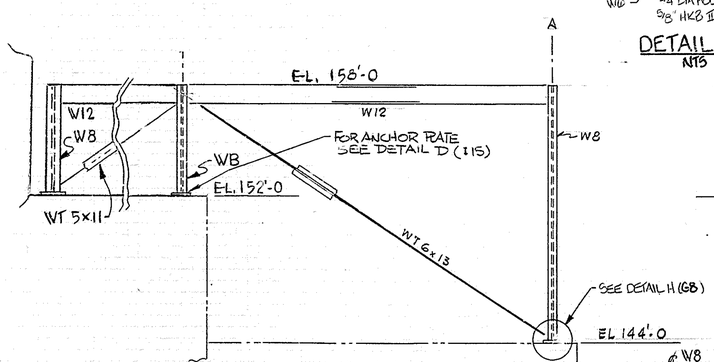

SOUTH ELEVATION
(LOOKING NORTH)
1/4" = 1'-0

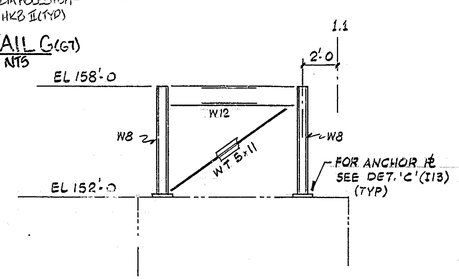

WEST ELEVATION
(LOOKING EAST)
1/4" = 1'-0

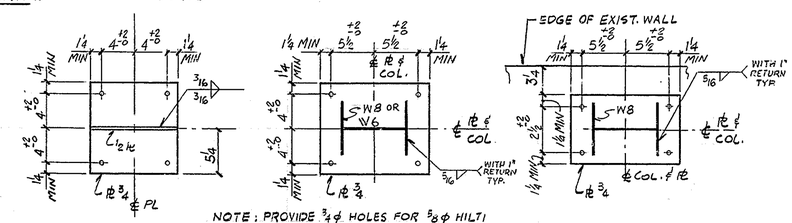

NOTE: PROVIDE ¾ϕ HOLES FOR ⅝ϕ HILTI KWIK II BOLTS (TYP).
NOTE: GROUT UNDER ANCHOR PLATES AS REQ'D (1" MAX) TO LEVEL SURFACE

DETAIL 'A' (F2) DETAIL 'B' (F6) DETAIL 'C' (I7)

ANCHOR PLATES DETAILS
N.T.S.

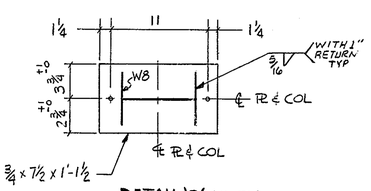

DETAIL 'D' (E3, I3)

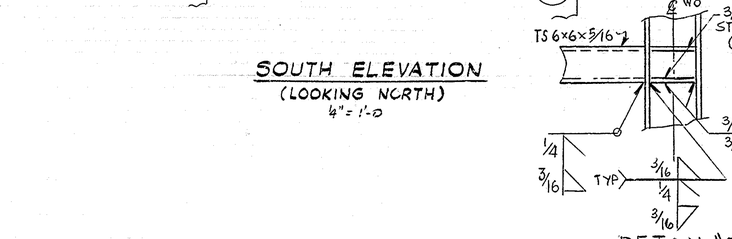

DETAIL "E"

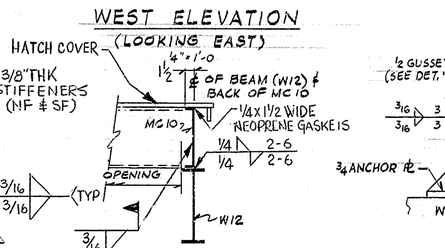

SECTION A-A (J8)
(TYPICAL AT HATCH OPENING)
1" = 1'-0

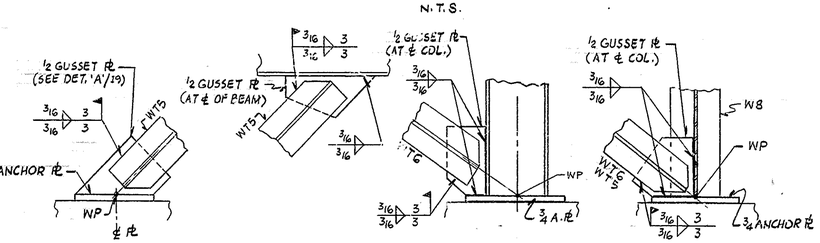

TYPICAL BRACING CONNECTION DETAILS
N.T.S.

WVNS APPROVAL
COG. MGR. V. DeSCamp
COG. ENGR.
DRFT. SUPR.
Q.A. MGR.
ES&H MGR.

FOR DRAWING INDEX SEE DRAWING NO.

APPRVD WVNS CO.		EBASCO SERVICES INCORPORATED
PROJECT MGR	8/8/90	A/E O.F.S. NO. 2388 TASK ORDER 025
ENGINEER SUPV	8/8/90	FOR WEST VALLEY NUCLEAR SERVICES COMPANY, INC WEST VALLEY, NEW YORK
LEAD DISC ENGR	8/8/90	WEST VALLEY DEMONSTRATION PROJECT
DESIGN	8/8/90	VITRIFICATION FACILITY
CHECKED V. PADMASHURAMA	8-3-90	BLOWER ROOM
DRAWN V. SEKERKA	DATE 8-3-90	STRUCTURAL STEEL
DE-AC07-81NE44139 PROJECT NO.		SIZE D; INDEX CODE NUMBER: AREA, DR. TYP, CL, ORIG; DRAWING NO. 906D-105; REV. 11
19-CWV-02275 SUBCONTRACT NO.		
ISSUED FOR CONSTRUCTION		SCALE AS SHOWN; SPEC. CODES; A/E SHEET NO. 906-D-105 C