VERIFY ALL DOCUMENTS FOR CURRENT REVISION AND PENDING CHANGES PRIOR TO EACH USE.
INIT_____ DATE_____

906-D-103

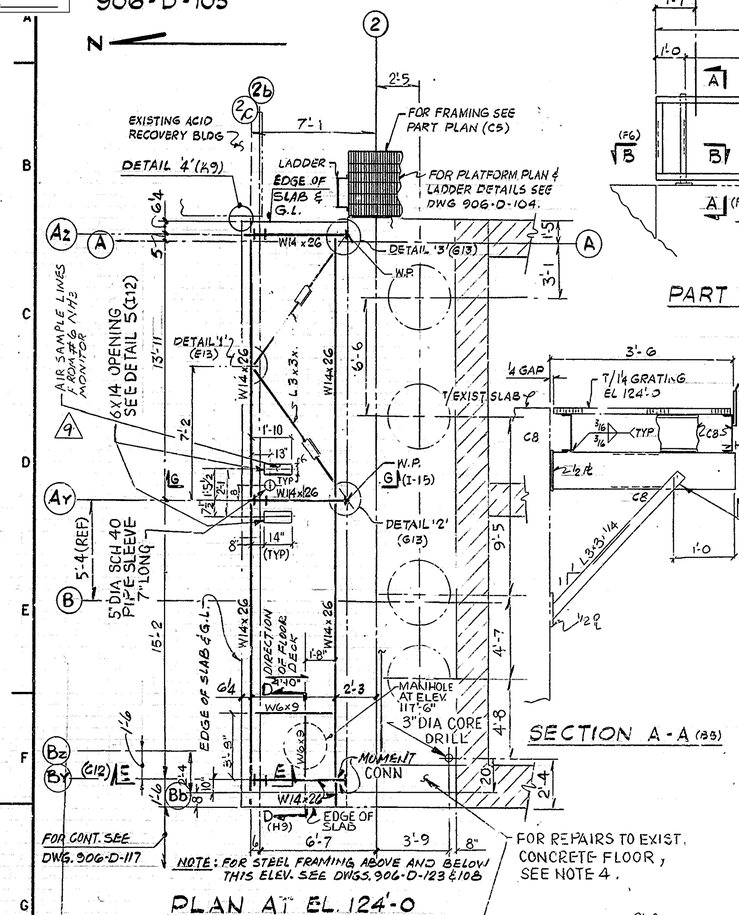

NOTE: FOR STEEL FRAMING ABOVE AND BELOW THIS ELEV. SEE DWGS. 906-D-123 & 108

PLAN AT EL. 124'-0

T.O.S. (-6")-U.N.

LL = 300 psf

SCALE 1/4" = 1'-0

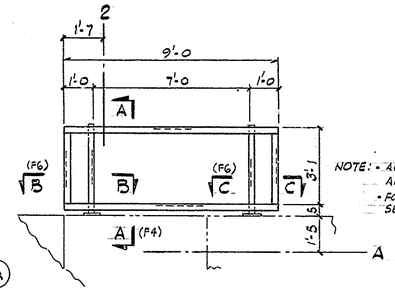

PART PLAN AT EL. 124'-0 (A3)

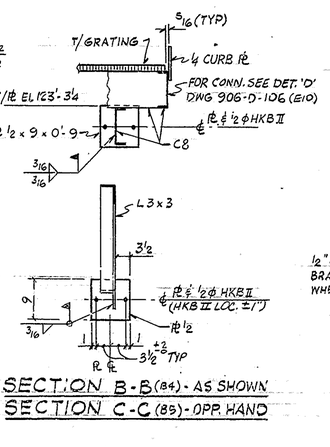

SECTION A-A (B3)

SECTION B-B (B4) - AS SHOWN

SECTION C-C (B5) - OPP. HAND

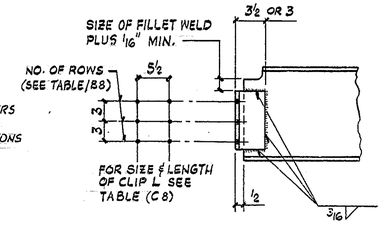

NO. OF ROWS	CLIP ANGLES	LENGTH	MEMBERS
1	L4x3x5/16	0'-3	C5, C6, C7, W6
2	L4x3 1/2x3/8	0'-5 1/2	C8, C9, C10, W8, W10
3	L4x3 1/2x3/8	0'-8 1/2	C12, W12, W14

STANDARD BEAM CONNECTIONS

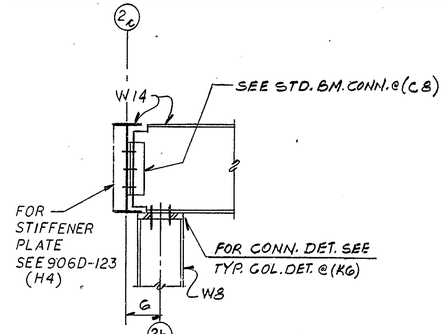

SECTION E-E (F1)

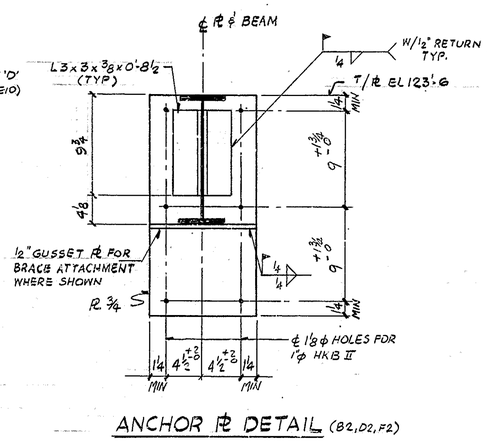

ANCHOR PL DETAIL (B2, D2, F2)

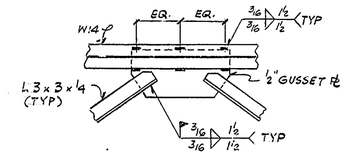

DETAIL '1' (C1)

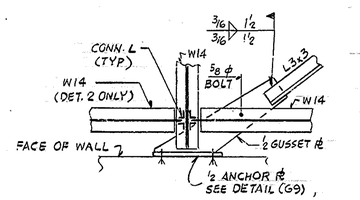

DETAIL '2' (D2) - AS SHOWN
DETAIL '3' (B2) - OPP. HAND

BRACE CONNECTIONS

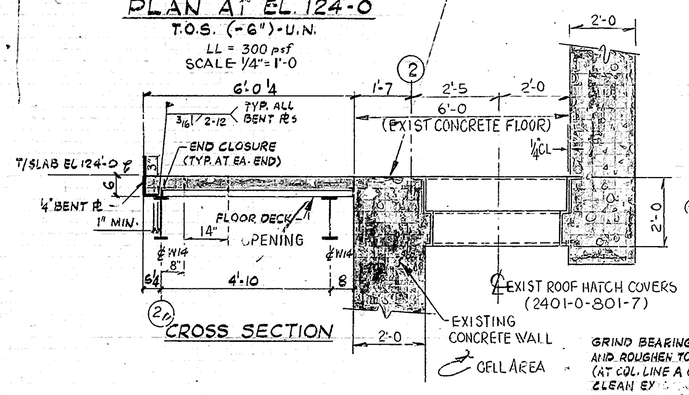

CROSS SECTION

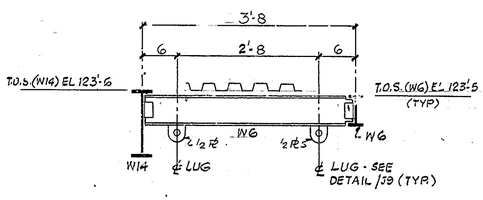

SECTION D-D (F2)

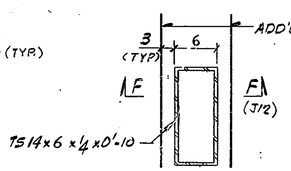

DETAIL '5' (C1)
NTS

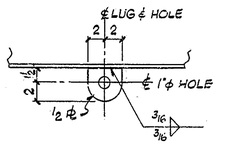

LUG DETAIL (H10)

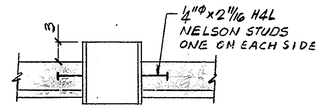

SECTION F-F (I/2)

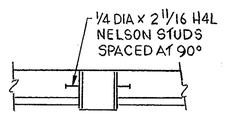

AFTER INSTALLATION OF CONDUITS, FILL WITH DOW CORNING SILICON PER DWG 906D-227 SH1 FIG 5 AND 906D-230 SH2 B8

SECTION G-G
NTS

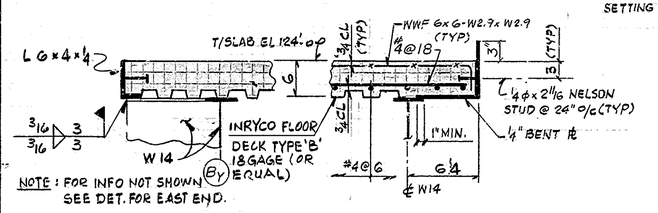

NOTE: FOR INFO NOT SHOWN SEE DET. FOR EAST END.

WEST END

EAST END

TYPICAL SLAB DETAILS

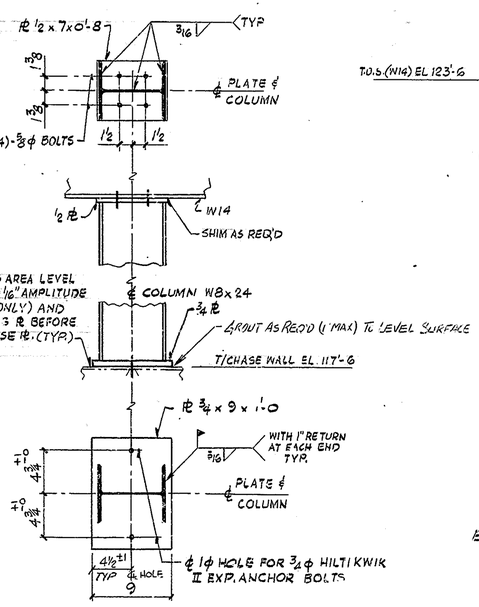

GRIND BEARING AREA LEVEL AND ROUGHEN TO 1/16" AMPLITUDE (AT COL. LINE A ONLY) AND CLEAN EXISTING PL BEFORE SETTING THE BASE PL (TYP.)

TYP. COLUMN DETAIL

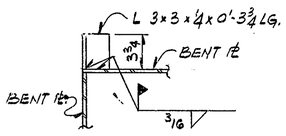

DETAIL '4' (B1)

REV NO	DATE	REVISION	DR	CH	APPROVED		
B	9-21-90	REVISED AS CIRCLED AND PER EBAR #1468	V.S.	RPL	WC	WC	WC
C	11-9-90	REV. PER EBAR #1468A		WC	WC	WC	
0	8/27/91	ER 2172			RPY		
1	9-16-91	REV/ECN 4523	RMS	DRS	RPY		
2	5-6-93	REV/ECN 6305	PD	KQ	EGC		
3	5-12-93	REVISED PER ECN 6290	GB	HB	DJR		
4	4-19-94	GENREV/ECN 7150	PD	HB	JHK		
5	12-02-94	NOX-0305 & 0215	HB	DRS	JRN RPY		
6	12-13-94	NOX-0146	RAS	DRS	JHK		
7	3-11-95	REV/ECN NOX-0487	MJL	CJ	MEM		
8	4-12-95	REV/ECN NOX-1075	PD	KQ	JRI		
9	12-23-97	ECN 10483	DLL	HB			

NOTES:

1. FOR GENERAL NOTES SEE DRAWING 906-D-100.
2. ALL ANCHOR BOLTS TO BE TIGHTENED TO SNUG CONDITION. STRUCTURAL BOLTS TO BE TORQUED TO AISC REQTS.
3. ALL 5/8 φ BOLTS SHALL BE ASTM A-325.
4. REPAIR EXIST. FLOOR WITH NU-KLAD 114 FILLER, SEALER. SEE SPEC CS-205, SECT. 09100.

REFERENCE DRAWINGS:

V.F. - OFF-GAS INSTRUMENT ROOM STEEL FRAMING	906-D-123
V.F. - MELTER EX-CELL OFF GAS SYSTEM MISCELLANEOUS STEEL DETAILS	906-D-104
V.F. - BLOWER ROOM - STRUCTURAL DETAILS	906-D-106
V.F. - STAIRWELL AND MCC ENCLOSURE - SH. 1	906-D-117
V.F. - 01/14 BUILDING VALVE GALLERY AND PIPE CHASE MODIFICATION SH. 1	906-D-108
V.F. OFF GAS SYSTEM ARCH. PLANS & DETAILS	906-D-150
V.F. OFF-GAS INST. RM - PIPING ARRG'T	906-D-068
V.F. OFF-GAS INST. RM - G.A. EQUIPT. @ 124'-0	906-D-037

FOR DRAWING INDEX SEE DRAWING NO. _____

APPRVD WVNS CO.		EBASCO SERVICES INCORPORATED A/E O.F.S. NO. 2388 TASK ORDER 025
PROJECT MGR	6/27/90	FOR WEST VALLEY NUCLEAR SERVICES COMPANY, INC WEST VALLEY, NEW YORK
ENGINEER SUPV W. CHAO	6/27/90	
LEAD DISC ENGR W. CHAO	6/27/90	WEST VALLEY DEMONSTRATION PROJECT
DESIGN W. CHAO	6/27/90	VITRIFICATION FACILITY
CHECKED K. PARASHURAMA	6/27/90	MELTER EX-CELL OFF GAS SYSTEM
DRAWN V. SEKERKA	DATE 6/21/90	INSTRUMENT ROOM FLOOR EL. 124'-0

DE-AC07-81NE44139 PROJECT NO.	SIZE D	INDEX CODE NUMBER: AREA, DR. TYP, CL, ORIG	DRAWING NO. 906D-103 REV. 9
19-CWV-02275 SUBCONTRACT NO.			
ISSUED FOR CONSTRUCTION	SCALE NONE	SPEC. CODES	A/E SHEET NO. 906-D-103

WVNS APPROVAL

COG. MGR.
COG. ENGR.
DRFT. SUPR.
Q.A. MGR.
R&S MGR.