VERIFY ALL DOCUMENTS FOR CURRENT REVISION AND PENDING CHANGES PRIOR TO EACH USE.
INIT_____ DATE_____

D-036

NO.	DATE	REVISION	DR	CH	APPROVED		
0	9-24-91	ER 2193			JRH		
1	12-2-91	ECN 4696	DAK	HAB	RPV		
2	05-10-93	ECN 6323	JLH	DRS	JHK		
3	05-14-93	ECN 6290	HJL	HAB	AJR		
4	8-17-94	ECN 8112	SRD				

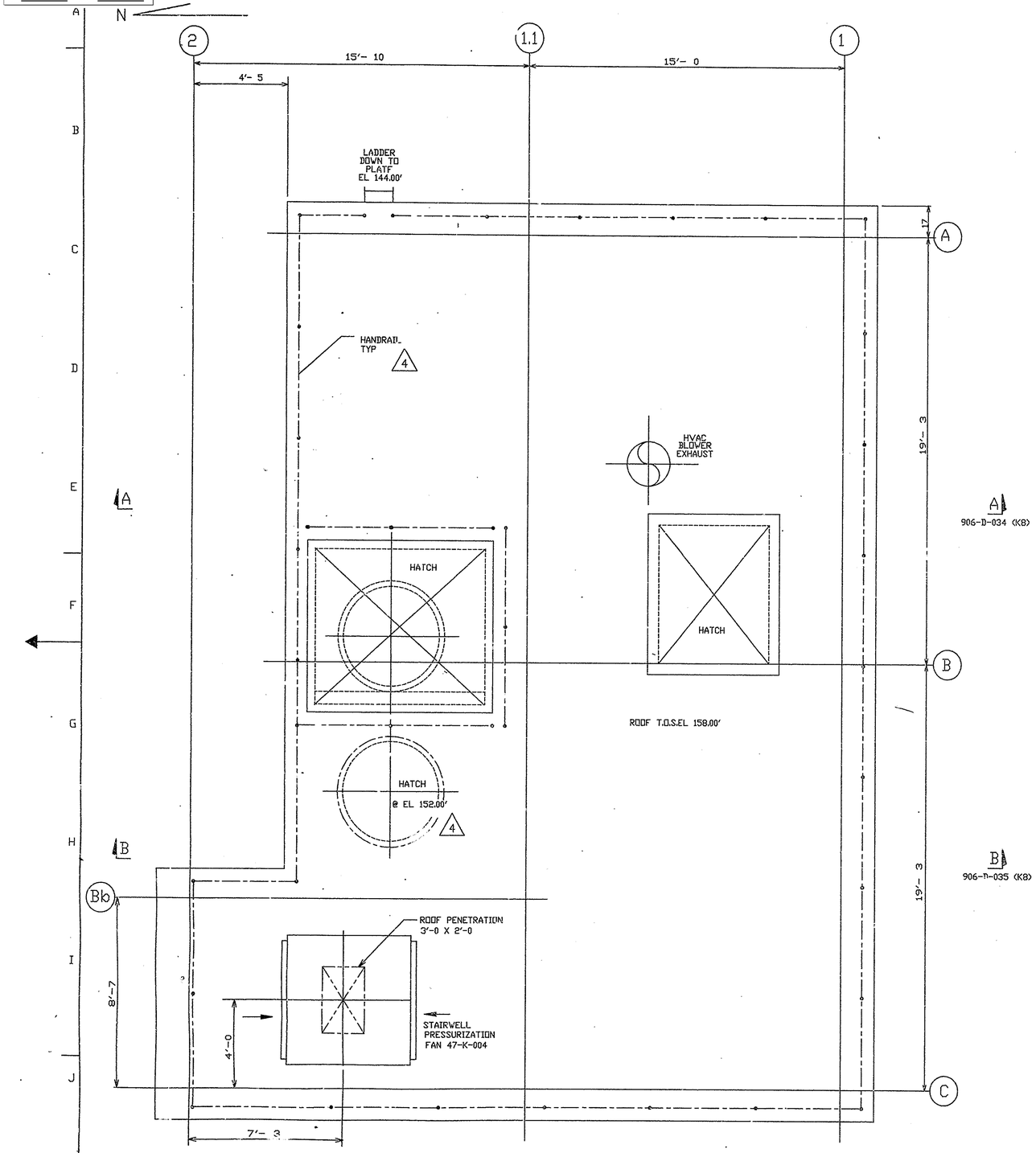

NOTES

FOR NOTES AND REFERENCE DRAWINGS SEE DWG 906-D-030.

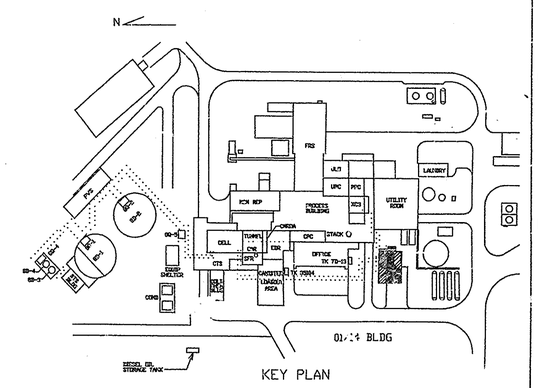

1 0 3 6 9FT 3/8"=1'-0

FOR DRAWING INDEX SEE DRAWING NO._____

APPRVD WVNS CO.		EBASCO SERVICES INCORPORATED A/E D.F.S. NO.2388 TASK ORDER 025 FOR WEST VALLEY NUCLEAR SERVICES COMPANY,INC WEST VALLEY,NEW YORK WEST VALLEY DEMONSTRATION PROJECT VITRIFICATION FACILITY GENERAL ARRANGEMENT 01/14 BUILDING PLAN EL 158.00' ROOF PLAN
PROJECT MGR F J E STOREY	12-07-90	
ENGINEER SUPV F S KOWALCZYK	12-07-90	
LEAD DISC ENGR F S KOWALCZYK	12-07-90	
DESIGN R J LEWKO	12-07-90	
CHECKED J SIEN	12-07-90	
DRAWN Y PATEL	DATE 12-07-90	
DE-AC07-81NE44139 PROJECT NO.		SIZE D; INDEX CODE NUMBER: AREA, DR.TYP, CL, ORIG; DRAWING NO. 906-D-036; REV. 4
19-CWV-02275 SUBCONTRACT NO.		
ISSUED FOR CONSTRUCTION		SCALE 3/8"-1'-0; SPEC. CODES; A/E SHEET NO. 906-D-036 A