VERIFY ALL DOCUMENTS FOR CURRENT REVISION AND PENDING CHANGES PRIOR TO EACH USE.
INIT_____ DATE_____

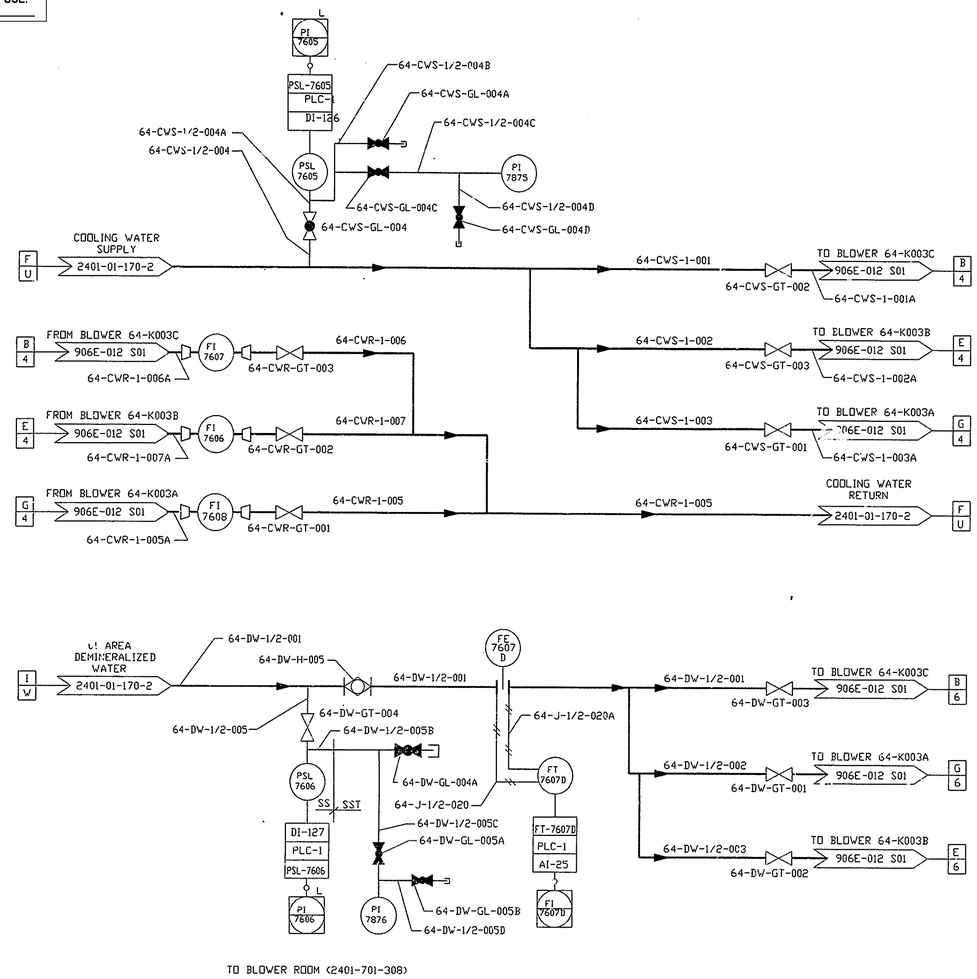

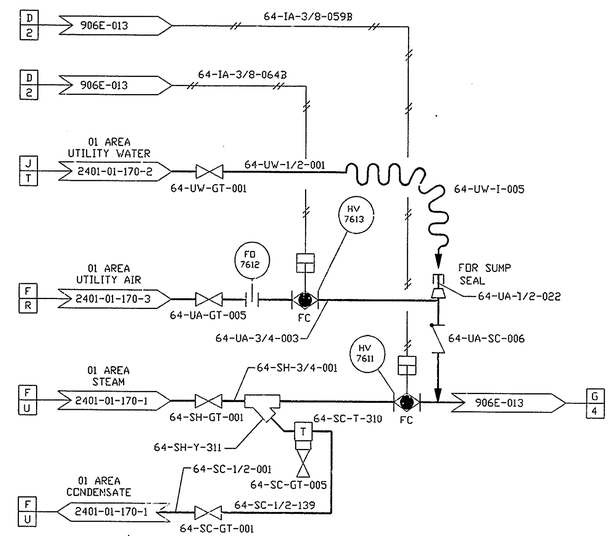

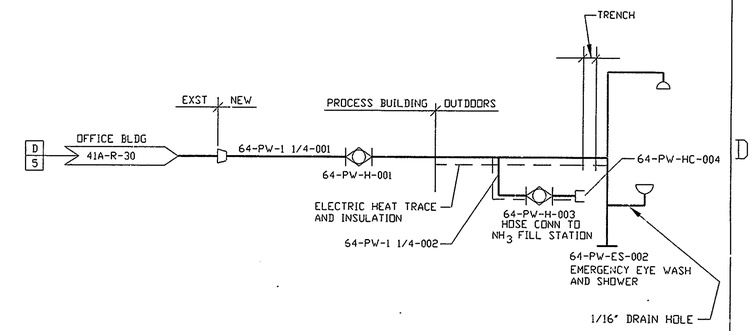

NOTES:

1. ALL INSTRUMENT NUMBERS PREFIXED BY SYSTEM NO "64"

REFERENCE DRAWINGS:

UTILITY ROUTING FLOW DIAGRAM STEAM,CONDENSATE,& DIESEL OIL	2401-01-170-1
UTILITY ROUTING DIAGRAM WATER SYSTEMS	2401-01-170-2
VF MELTER OFF-GAS SYSTEM P&ID	906E-011
VF MELTER OFF-GAS SYSTEM P&ID	906E-012
VF MELTER OFF-GAS SYSTEM P&ID	906E-013
VF MELTER OFF-GAS SYSTEM P&ID	906D-014
VF MELTER OFF-GAS SYSTEM P&ID	906D-015
INSTRUMENT AIR SYSTEM P&ID	906E-016
UTILITY FLOW DIAGRAM PLANT AIR, INSTRUMENT AIR	2401-01-170-3
FIRST FLOOR PLUMBING PLAN OFFICE BUILDING	41A-R-30
SYMBOLS NOTES AND LEGENDS	900D-1306
SYMBOLS NOTES AND LEGENDS	900D-1307
SYMBOLS NOTES AND LEGENDS	900D-1308

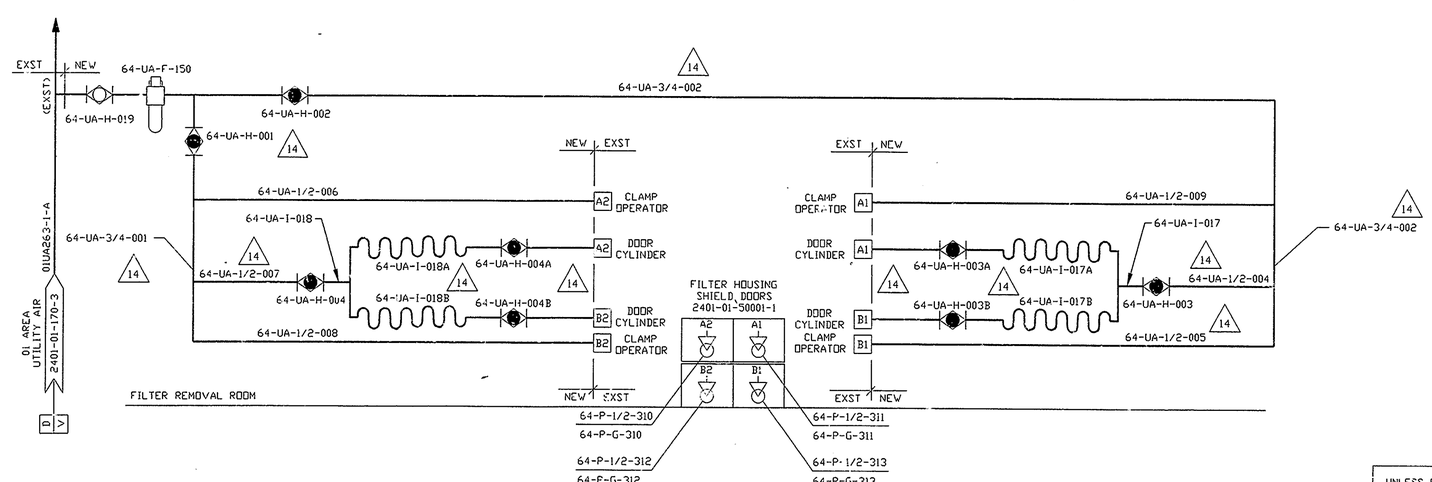

QTY REQD	ITEM NO.	NOMENCLATURE OR DESCRIPTION	PART OR IDENTIFYING NO.	MATERIAL OR SPEC

PARTS LIST

REV	DESCRIPTION	APVD
0	ER 2571 4/6/93	JRH
1	ECN 6288 LPK 4/5/93	HAB
2	ECN 7237 SRD 4/14/94	HAB
3	ECN 7815 SRD 9/6/94	JHK KQ RPV
4	ECN 8528 & FCN NDX-0311 VCK 12/14/94	KQ JRY
5	FCN NDX-0525 RAS 2/8/95	JLS RPZ
6	FCN NDX-0983 RJV 3/28/95	JLS JRY
7	ECN 8810 RJV 04/12/95	GLS
8	ECN 8892, 8962 KJL 9/12/95	DRS
9	ECN 9435 DMW 11/28/95	HAB
10	ECN 9710 SAB 04/02/96	HAB
11	ECN 9775 SAB 04/11/96	HAB
12	ECN 10317 JMS 12/19/96	HAB
13	ECN 10797 DLL 2/2/98	HAB
14	ECN 12515A LRD 3/6/2000	DRS LJG

UNLESS OTHERWISE SPECIFIED	DRAFTER C. ROBLEE	DATE 10/17/92	A/E CONTRACT NO. / CODE IDENT. NO.
ALL DIM IN INCHES	CHECKER D. SHAFFER	DATE 03/25/93	FOR WEST VALLEY NUCLEAR SERVICES CO.,INC. WEST VALLEY, NEW YORK
TOLERANCES-DO NOT SCALE	ENGR. R. MARTIN	DATE 03/25/93	
2 PL DEC ± N/A; 3 PL DEC ± N/A; ANGLES ± N/A; N/A	COG.MGR.APPVL T. CUTTRELL	DATE 03/25/93	VF EX-CELL OFF-GAS P&ID MISCELLANEOUS UTILITIES
FRACTIONS ± N/A	SYS.ENGR.APPVL R. VANCE	DATE 04/06/93	
D.SPEC.NO. 2071	O.A.APPVL R. KRAPF	DATE 04/06/93	DWG SIZE D; SCALE NONE; WEIGHT; DWG NO. 906D-009; REV 14
NEXT ASSEMBLY	DFTG.SUPR. J. HORTON	DATE 04/06/93	A/E DWG NO.
			SHEET 1 OF 1

CAD DRAWING-DO NOT REVISE THIS ORIGINAL

1=4.00 F009D001

Wed Mar 08 07:33:44 2000 DRS