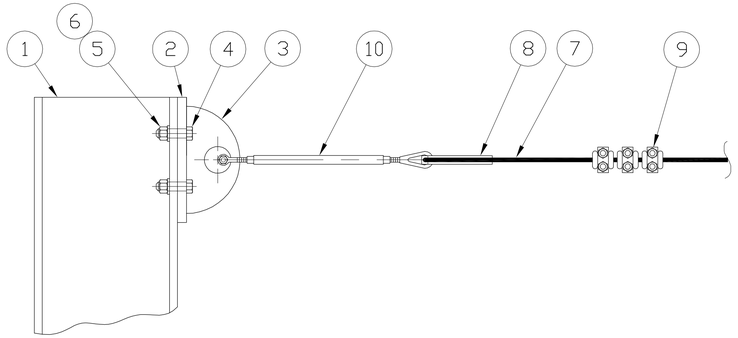

VIEW H-H (SH 1, D7)

CABLE ANCHOR (3 PLACES)

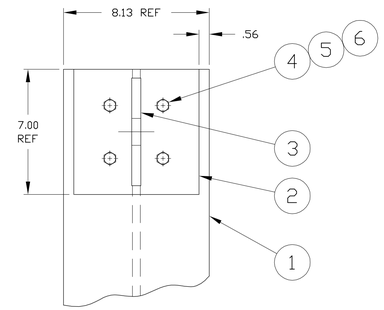

VIEW F-F (SH 1, C3)

ITEMS 7, 8, 9 AND 10 NOT SHOWN FOR CLARITY
USE ITEM 2 AS TEMPLATE FOR DRILLING HOLES IN ITEM 1

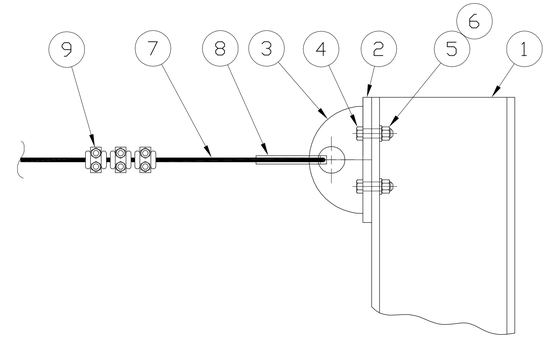

VIEW G-G (SH 1, D3)

CABLE ANCHOR (3 PLACES)

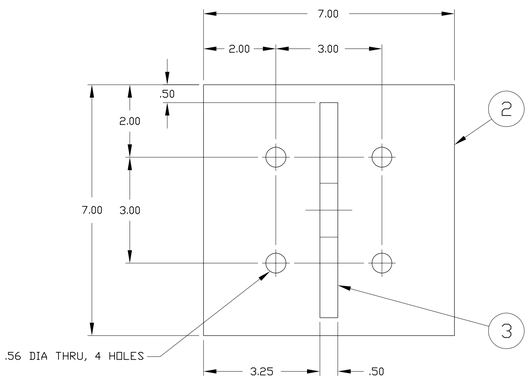

SCALE: 1/2

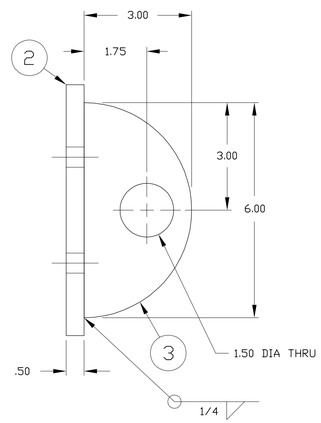

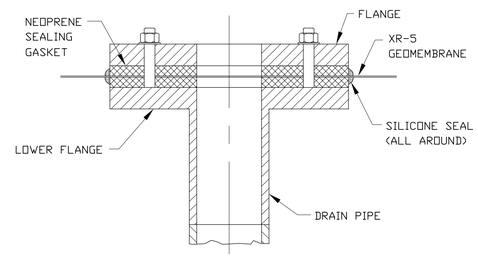

DETAIL J SH1 (B4)

SCALE: NONE

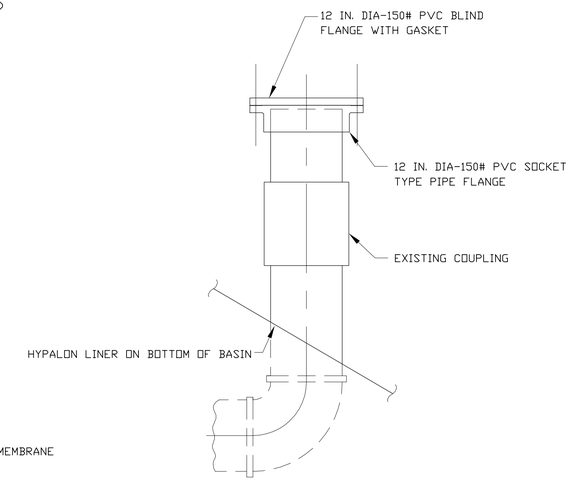

DETAIL D (SH 1, D5)

SCALE: 1 = 1 FT 0

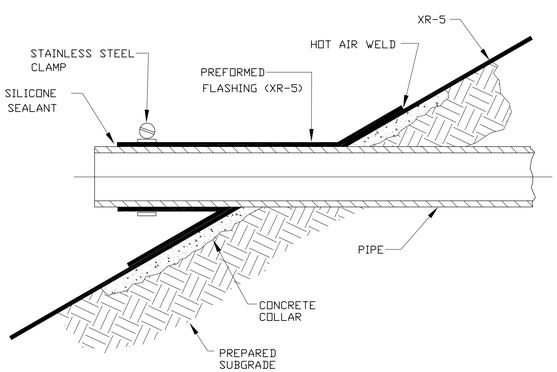

DETAIL L SH1 (B3)

ELEVATION VIEW
TYPICAL PIPE PUNCTURE
SEAL DETAIL XR-5 LINER
SCALE: NONE

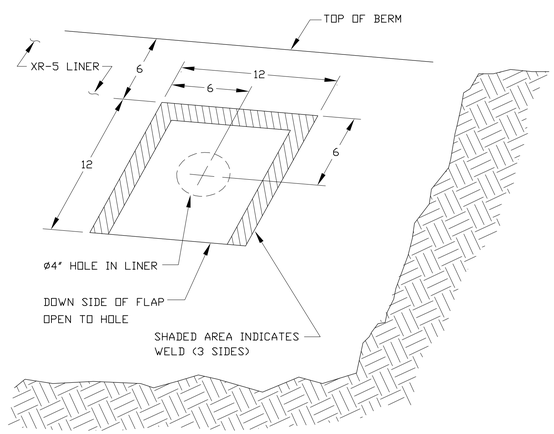

DETAIL M SH1 (D1, C1, C4, D4)

PLAN VIEW
FLAP VENT DETAIL
XR-5 LINER
SCALE: NONE

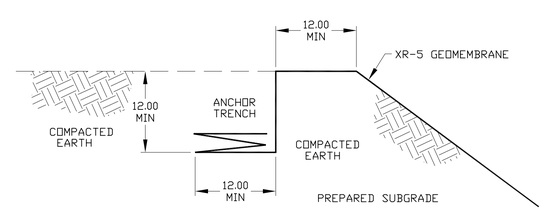

DETAIL K SH1 (B1, B5)

TYPICAL ANCHOR DETAILS
SCALE: NONE

2 SUPERCEDES PIECZONKA ENGINEER DRAWING 03705 K13

QTY REQD	ITEM NO.	NOMENCLATURE OR DESCRIPTION	PART OR IDENTIFYING NO.	MATERIAL OR SPEC

PARTS LIST

REV	DESCRIPTION	APVD
0	ER2201 5/3/2000	JRH
1	ECN 12138 WCK 5/3/2000	JLH
2	ECN 12743 HAB 08/03/2000	JLH

REVISIONS

VERIFY ALL DOCUMENTS FOR CURRENT REVISION AND PENDING CHANGES PRIOR TO EACH USE
INIT _____ DATE _____

UNLESS OTHERWISE SPECIFIED		DRAFTER L. KOMENDA	DATE 5/7/91
ALL DIM IN INCHES		CHECKER H. BARKER	DATE 09/27/91
TOLERANCES-DO NOT SCALE		ENGR. R. METZGER	DATE 10/02/91
2 PL DEC ±.06 / 3 PL DEC ± N/A / ANGLES ± N/A	125√		
FRACTIONS ± N/A		CDG.MGR.APPVL B. CONNORS	DATE 10/03/91
D.SPEC.NO. 1859		SYS.ENGR.APPVL	DATE
NEXT ASSEMBLY		Q.A.APPVL	DATE
		DFTG.SUPR. J. HORTON	DATE 10/04/91

A/E CONTRACT NO. CODE IDENT. NO.

FOR

WEST VALLEY NUCLEAR SERVICES CO.,INC.
WEST VALLEY, NEW YORK

AERATION DESIGN FOR EQUALIZATION BASIN DETAILS

DWG SIZE: D
SCALE QUARTER & NOTED
WEIGHT
DWG NO. 900D-4700
REV 2
A/E DWG NO.
SHEET 2 OF

CAD DRAWING-DO NOT REVISE THIS ORIGINAL