DRAWING NUMBER 8284MC-D-1

PLAN HOLD CORPORATION • IRVINE, CALIFORNIA

REORDER BY NUMBER D75AR

POSITION EDGE OF PRINT ON THIS LINE

BILL OF MATERIAL

ITEM	PART NO.	DESCRIPTION	
1	67-A-37	AERATION DECK ASS'Y TANK #1	1
2	67-A-38	AERATION DECK ASS'Y TANK #2	1
3	67-A-41	STD SETTLING TANK DECK TANK # 3	1
4	A-2	COMBO DECK	1
5	A-3	TOP HALF TANK 1 (HOLE LOCATION)	1
6	A-4	TOP HALF HOLE DELETION TANK # 2	1
7	A-5	HOPPER SOLID (HOLE LOCATION) TANK # 3	1
8	A-6	(HOLE LOCATION) BOTTOM HALF TANK 4	1
9	67-A-50	BOTTOM HALF TANK # 1, 2	2
10	8009570	FIXCRETE 80 LB BAG	9
11	800 8027	SEALER 3/4 KENT X 720	2
12	B-1	PAINT SPECS	1
13	B-2	FLOW METER ASS'Y	1
14	C-5	FLOW METER STILLING WELL L/S	1
15	D-2	DUPLEX BLOWER & MOTOR ASS'Y	1
16	D-3	INSTALLATION INSTRUCTIONS CONCRETE PLANTS	1
17	D-4	PIPING DETAIL	1
18	NSML	CHLORINATOR, SANURIL #1000	1
19	NSML	AGENT, DISINFECTING, CHLORINE TABLET, 45LB PAIL, SANURIL # 115	1
20	3911900	ANCR XNS TPE 1/4 - 20UNC - 2A X 1 3/4	4
21	67-A-30	CHLORINATOR HANGER	1
22	B-5	SETTLING TANK DECK SCREEN TANK # 3	1
23	C-6	HANDRAIL ASS'Y	1
24	C-7	FROTH SPRAY PIPING	1
25	C-8	TANK GRATING TANK #1	1
26	C-9	TANK GRATING TANK #2	1
27	0807540	CPLG FLXBL NO HUB 10 56-66 6"	1
28	67-A-10	COVER PLATE STL 22	1
29	67-A-44	COVER PLATE FOR 12 X 12 OPENING	1
30	A-12	COVER PLATE FOR 22 X 22 OPENING	1
31	A-13	4" OPEN BOTTOM BAR SCREEN	1
32	2313413	FLG STL WLD SLIP-ON 4	1
33	2300117	PIPE STL 4 SCH 40 X 36	1
34	A-14	INFLUENT PIPE SUPPORT	1
35	3911357	BLT HX 5/8 - 11 UNC - 2A X 2	4
36	3900304	NUT HEX HVY 5/8 - 11 UNC - 2B	4
37	3911934	ANCR WEDGE 1/2 X 2 3/4	2
38	C-10	MIXING BAFFLE INSTALL. TANK # 4	1

WEIGHTS		UPLIFT FORCE W/ EXTERNAL WATER TABLE @ TOP OF TANK	BELOW TOP OF TANK 1'-9"	BELOW TOP OF TANK 3'-9"
TANK (1) W/DECK	= 24,500 #	20,300 #	13,900 #	5700 #
TANK (2) W/DECK	= 24,500 #	20,300 #	13,400 #	5700 #
TANK (3) W/DECK	= 17,000 #	14,300 #	4,700 #	0
TANK (4) W/DECK	= 15,700 #	3100 #	0	0

SHIPPING NOTES:
1) SHIP LOOSE ITEMS # 1-10, 22, 25, 26, 28-30 LABEL PER B.O.M.
2) SHIP ITEMS # 12, 13, 15-17, 23, 24 PER REF. DWG.
3) BOX ITEMS # 11, 19, 20, 27 LABEL "PLANT PARTS"
4) SHIP LOOSE ITEMS # 14, 18, 21 LABEL PER B.O.M.
5) ASS'Y ITEM # 32, 33 SHIP LOOSE WITH ITEM # 34, 231 LABEL "PLANT INFLUENT PARTS"
6) ASS'Y ITEM # 38 IN TANK # 4 FOR SHIPPING
7) BOX ITEM # 35-37 LABEL "PLANT PARTS"

ERECTOR: ALL EQUIPMENT TO BE TESTED THRU 3 ELECTRICAL CYCLES

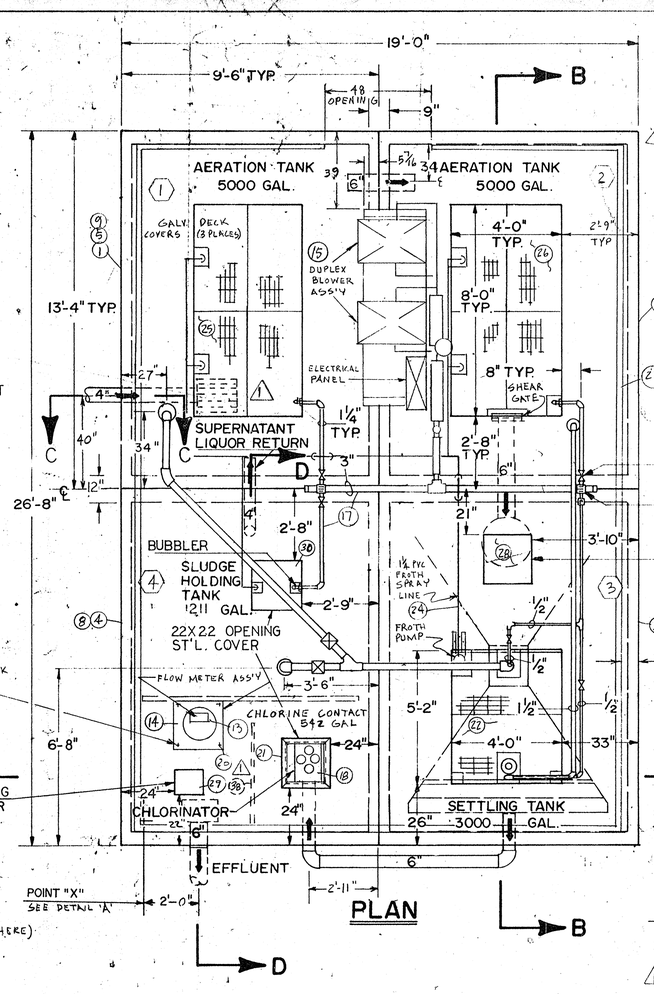

ERECTOR: MATCH DRILL CONCRETE DECK FOR ITEM # 20 (4 PLACES)

NOTE:
THE TREATMENT PLANT WILL ACHIEVE EFFLUENT LIMITS, PER SPEC SECTION 1.05 E. PAGE #390-2 OF SPECIFICATIONS WHEN THE TREATMENT PLANT IS OPERATED PER THE OPERATING INSTRUCTIONS TO BE PROVIDED BY DAVCO

NOTE:
RATE OF RETURN SLUDGE IS CONTROLLED BY AMOUNT OF GPM

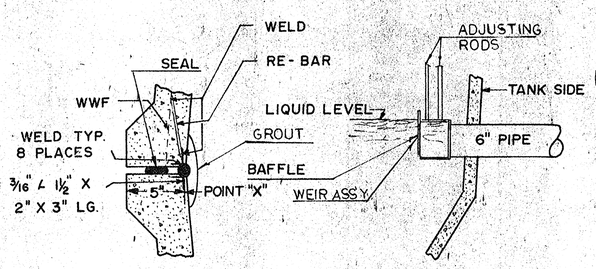

DETAIL A

WEIR DETAIL

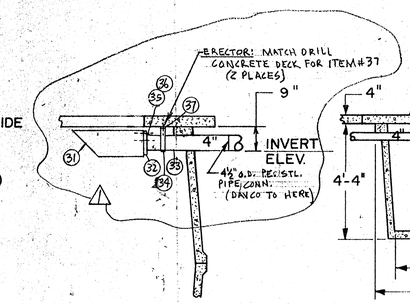

SECTION C-C
INFLUENT LINE DETAIL

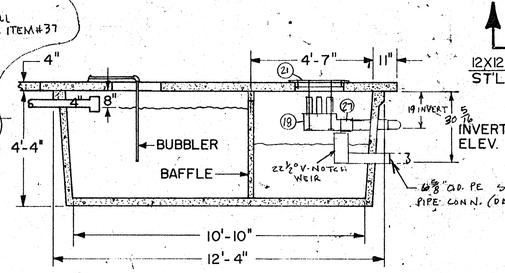

SECTION D-D
EFFLUENT LINE DETAIL

NOTES—
1. ALL TRANSFER PIPING TO BE PVC, TYPE I, GRADE I.
2. ALL PIPING HOLES TO BE SHOP INSTALLED
3. ALL BAFFLES TO BE SHOP INSTALLED.

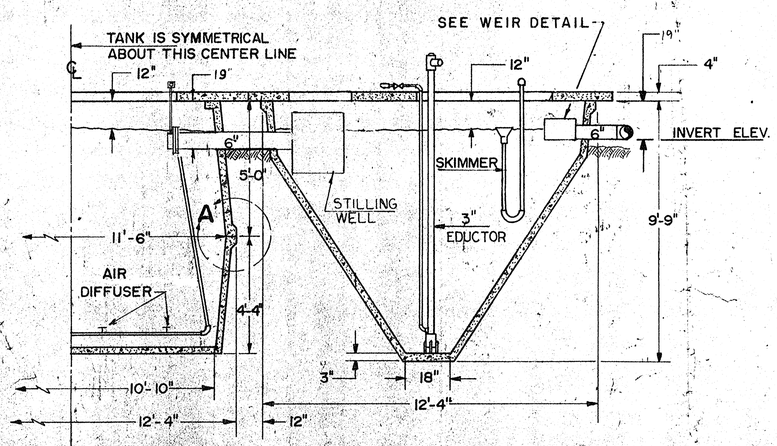

SECTION B-B

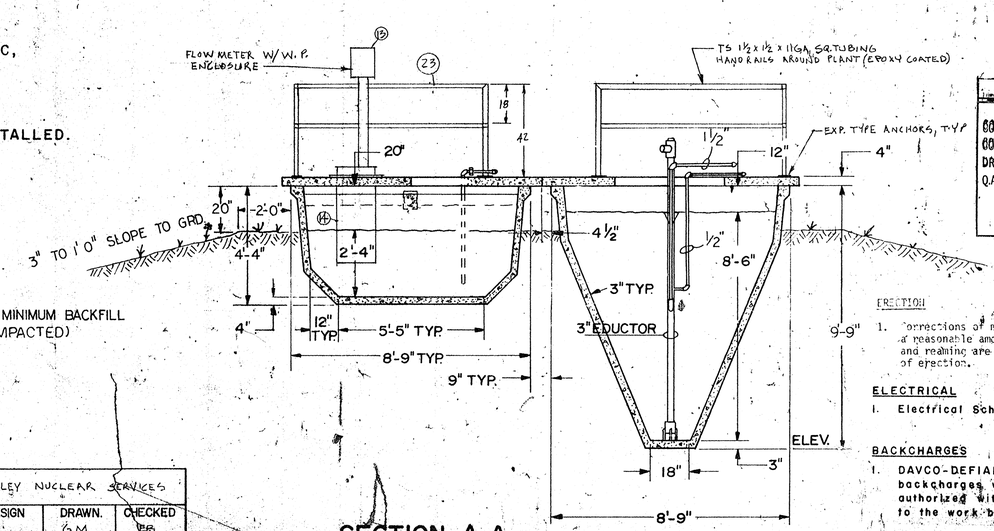

SECTION A-A

WVNS APPROVAL	
GOG. MGR.	J. Fr James 5/23/85
GOG. ENGR.	[illegible] 5/24/85
DRFT. SUPR.	[illegible] 12/12/88
Q.A.	[illegible] 6/21/85

ERECTION
1. Corrections of minor misfits and a reasonable amount of cutting and reaming are considered a part of erection.

ELECTRICAL
1. Electrical Schematic (see dwg B-7)

BACKCHARGES
1. DAVCO-DEFIANCE will not accept any backcharges which have not been authorized with a cost approval prior to the work being done.

JOB	WEST VALLEY NUCLEAR SERVICES		
DATE 10/1/84	DESIGN	DRAWN. GM	CHECKED
SCALE 3/8"		APP.	
DAVCO	DWG NO. 8284MC-D-1 R-1		SHEET OF

0	ER1510	KW	12/12/88
Rev	REVISION INDICATED BY △	GM	11-15-84

10 E.A.