VERIFY ALL DOCUMENTS FOR CURRENT REVISION AND PENDING CHANGES PRIOR TO EACH USE.
INIT_____ DATE_____

03705-20 P20NKA

REVISIONS						
ZONE	REV	DESCRIPTION	BY	CH	DATE	APPROVED
	0	ER2422			8/24/92	
1	REV/ECN 6792		PD	110-29-93	KQ	SA
	2	REV/ECN 8627	RMS		2/8/94	
	3	ECN 10610	RCH		6/5/97	

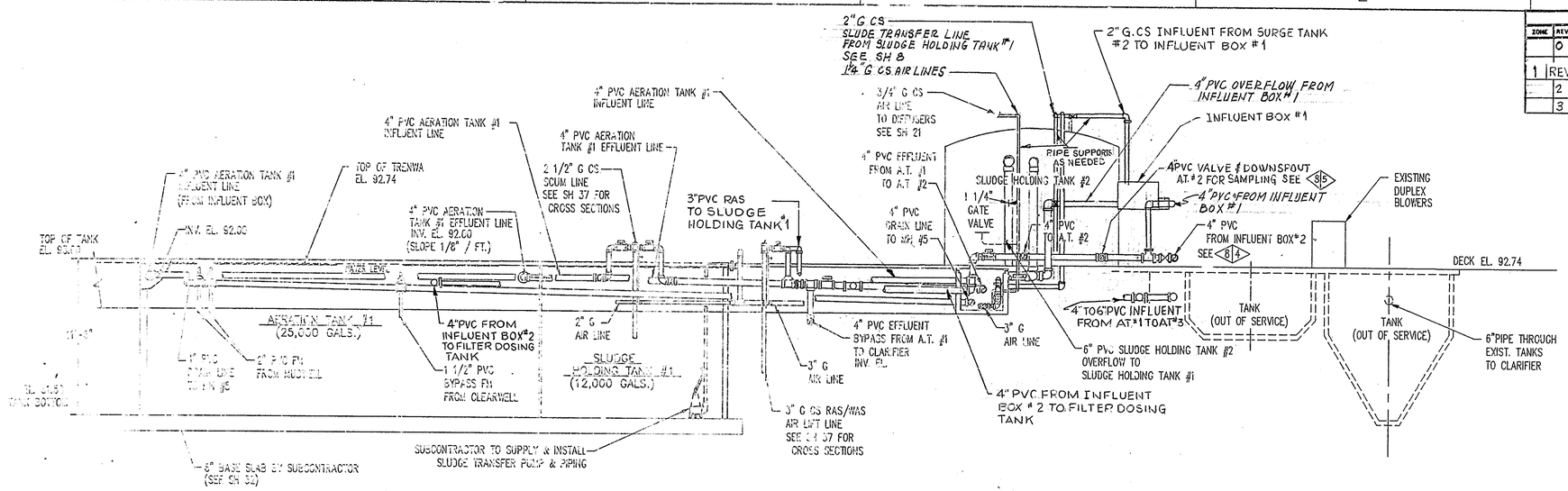

ELEVATION SECTION A-A SH 8(C,1) SH 9(C,1)

SEE SH 8, 9 & 37

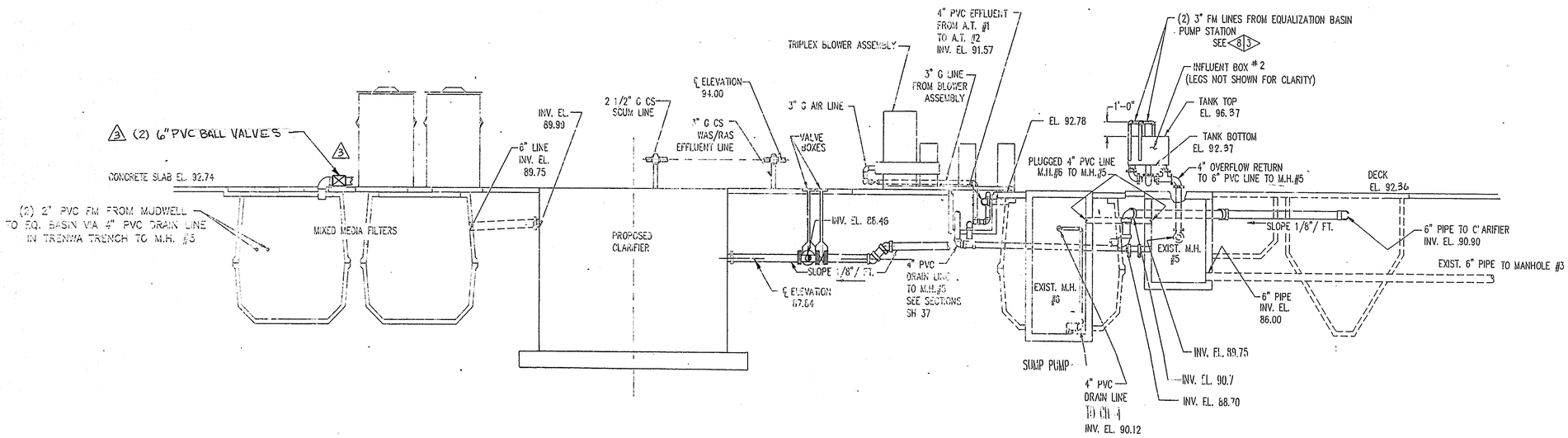

ELEVATION SECTION B-B SH 8(C,1) & SH 9(C,1)

SEE SH 8, 9 & 37

NO. DENOTES REFERENCE DRAWING NUMBER INDEXED ON SH 1.

NO.|NO. DENOTES SHEET NO. & NOTE NO. SEE CONSTRUCTION NOTES.

LEGEND – SEE SH 1.

STATE OF NEW YORK — STUDER O. ARNESS — 058239-1 — PROFESSIONAL ENGINEER

WVNS APPROVAL

COG. MGR. _____ 8/20/92
COG. ENGR. _____ 8/20/92
DRFT. SUPR. _____ 8/20/92
Q.A. MGR. _____ 8/20/92
R & S MGR. _____

REV. 2/2/94

STATE OF NEW YORK — THADDEUS I. PIECZONKA — 055180 — LICENSED PROFESSIONAL ENGINEER

Drf.	REJ	REJ
Dsg.	TJP	T.J.P.
Date	11-4-91	7-10-92
Scale:	1/4"-1'-0	PLOT: .25=12

Pieczonka Engineering — Orchard Park, New York

WEST VALLEY NUCLEAR SERVICES
WASTEWATER TREATMENT FACILITY

FACILITY SECTIONS

Dwg. 03705 K20

Sheet 20

Rev 3