VERIFY ALL DOCUMENTS FOR CURRENT REVISION AND PENDING CHANGES PRIOR TO EACH USE.
INIT_____ DATE_____

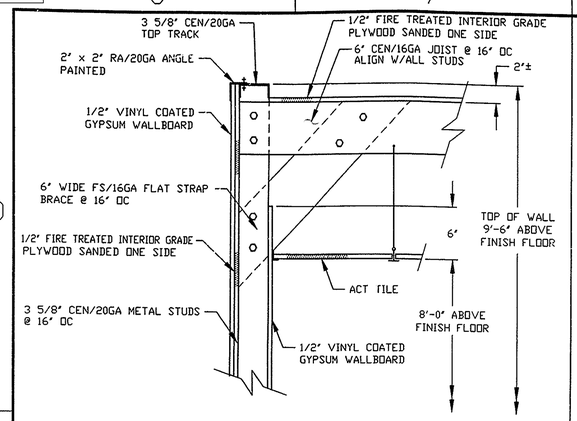

Y SH2 (B7) SECTION DETAIL

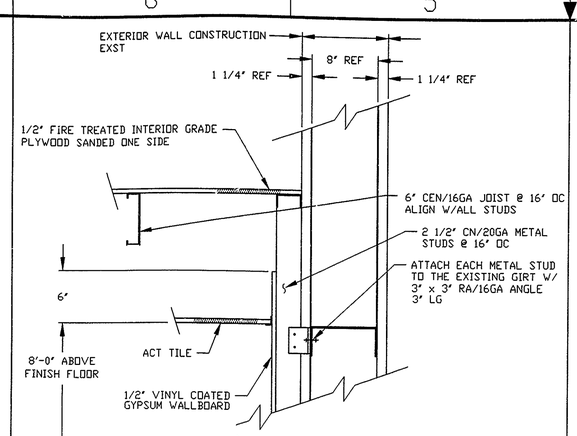

Z SH2 (C7) SECTION DETAIL

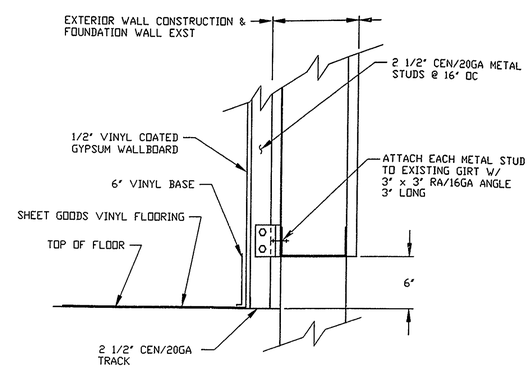

AA SH2 (B7) SECTION DETAIL

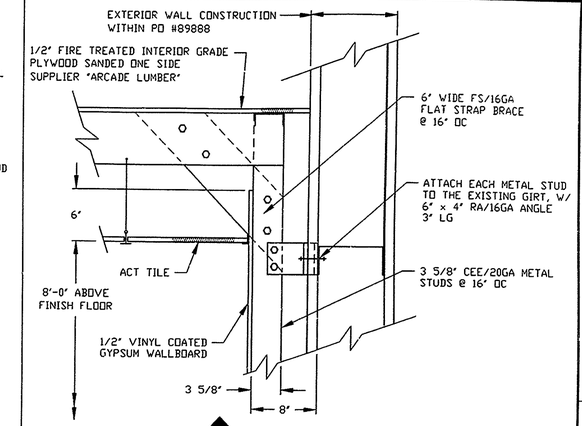

BB SH2 (C4) SECTION DETAIL

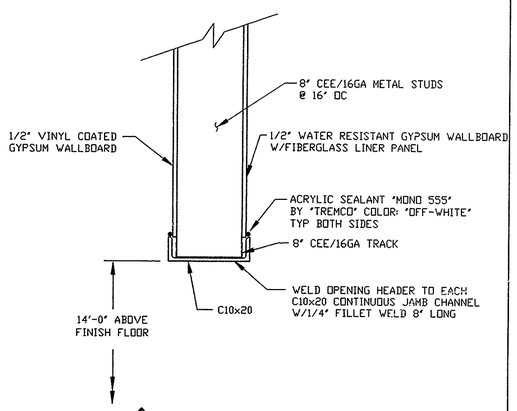

CC SH2 (D8) SECTION DETAIL

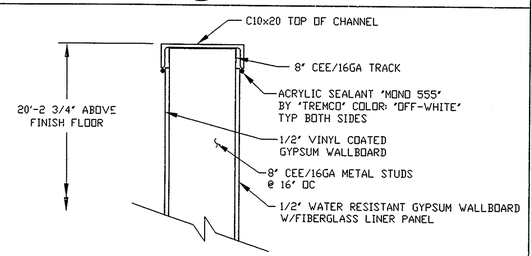

NOTES:

1 CONNECT TOP OF WALL CHANNEL TO COL A-2 & B-1 AS FOLLOWS: WELD A L4"x4"x1/4"x6" LONG, W/ 3/16"x4" LONG FILLET WELD ALONG THE HEEL OF THE ANGLE TO THE CHANNEL. CONNECT W/2 EACH 1/2"x2 1/2" LONG, A307 BOLTS W/NUTS & WASHERS

2 CONNECT TOP OF WALL CHANNEL TO COL B-2 AS FOLLOWS: WELD TWO L4"x4"x1/4"x4" LONG, W/ 3/16"x4" LONG FILLET WELD ON THE EDGE OF THE ANGLE TO THE CHANNEL CONNECT W/2 EACH 1/2"x2 1/2" LONG, A307 BOLTS W/NUTS & WASHERS

3 MITER CUT TOP OF WALL CHANNEL TO FIT TOGETHER, WELD W/3/16" FILLET WELD

DD SH2 (D8) SECTION DETAIL

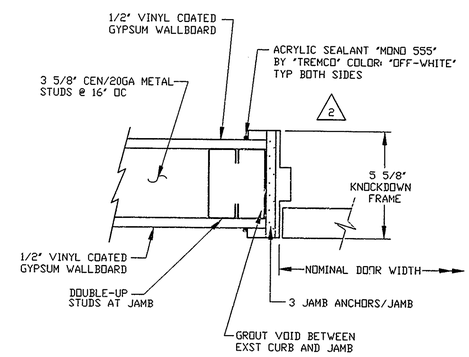

EE SH2 (A4) JAMB DETAIL
SCALE: 3"=1'-0"

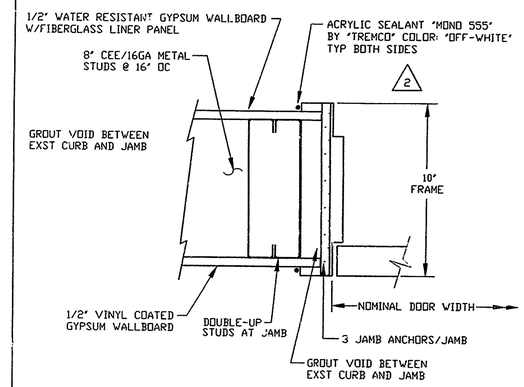

FF SH2 (C8) JAMB DETAIL
SCALE: 3"=1'-0"

NOTE:
PAINT ALL STUCTURAL STEEL WITH "SHERWIN WILLIAMS INDUSTRIAL ENAMEL", TWO COATS, COLOR: "GRID GRAY SW-1026" GLOSS, PREPARE AND PRIME SURFACE AS PER "SHERWIN WILLIAMS" SPECIFICATIONS

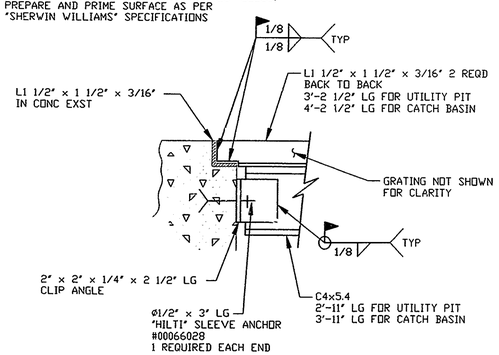

GG SH2 (B2, C3) SECTION DETAIL

NOTE:
PAINT ALL STUCTURAL STEEL WITH "SHERWIN WILLIAMS INDUSTRIAL ENAMEL", TWO COATS, COLOR: "GRID GRAY SW-1026" GLOSS, PREPARE AND PRIME SURFACE AS PER "SHERWIN WILLIAMS" SPECIFICATIONS

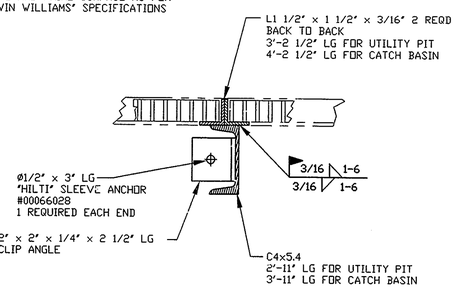

HH SH1 (D2, B2) SECTION DETAIL

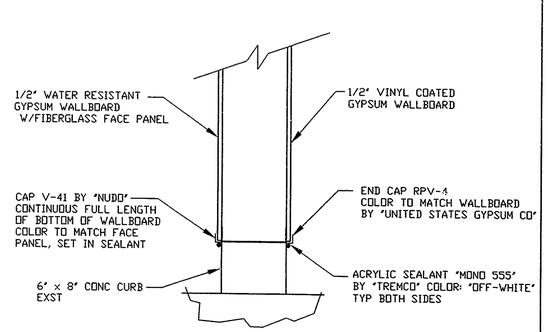

JJ SH2 (B4) SECTION DETAIL

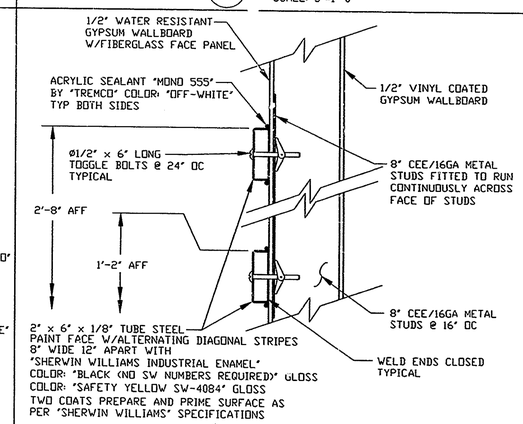

KK SH2 (C3) SECTION DETAIL

REVISIONS

REV	DESCRIPTION		APVD
0	ER4006	10/10/97	JRH
1	FCN DBA-0038 JHS	12/26/97	HAB
2	FCN DBA-0110 CGR	4/7/98	HAB

UNLESS OTHERWISE SPECIFIED ALL DIMENSIONS IN INCHES	DRAFTER D. KUREK	DATE 9/8/97	A/E CONTRACT NO. / CODE IDENT NO.
TOLERANCES: 2PL DEC ± N/A; 3PL DEC ± N/A; DO NOT SCALE DRAWING	CHECKER H. BARKER	DATE 10/10/97	FOR WEST VALLEY NUCLEAR SERVICES CO., INC. WEST VALLEY N.Y.
FRACTS ± 1/2"; ANGLES ± N/A; FINISH N/A	ENGINEER J. SPARSHOTT	DATE 10/10/97	LLW2
FILE NAME 7493D004			ARCHITECTURAL SECTIONS & DETAILS
PLOT SCALE 1=8.00			
D SPEC NO. 7117	DATABASE LINKED DRAWING.	DWG SIZE D	SCALE 1 1/2"=1'-0" & NOTED; DWG NO. 900D-7493; REV 2
NEXT ASSEMBLY	SEE ENGINEERING RELEASE FORM (ER) FOR DRAWING APPROVAL SIGNATURES.		WEIGHT; A/E DWG NO.; SHEET 4 OF

Wed Apr 08 09:36:59 1998 HAB

CAD DRAWING-DO NOT REVISE THIS ORIGINAL