VERIFY ALL DOCUMENTS FOR CURRENT REVISION AND PENDING CHANGES PRIOR TO EACH USE.
INIT_____ DATE_____

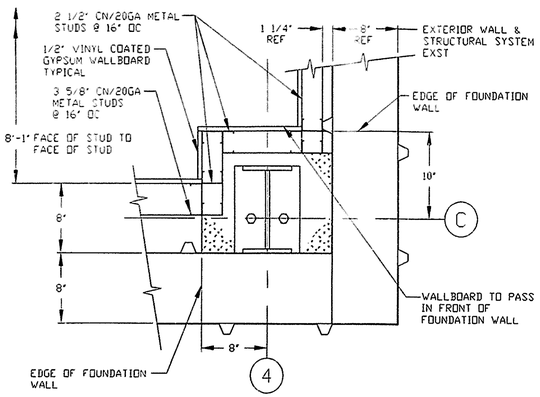

A SH1 (B4) PLAN DETAIL

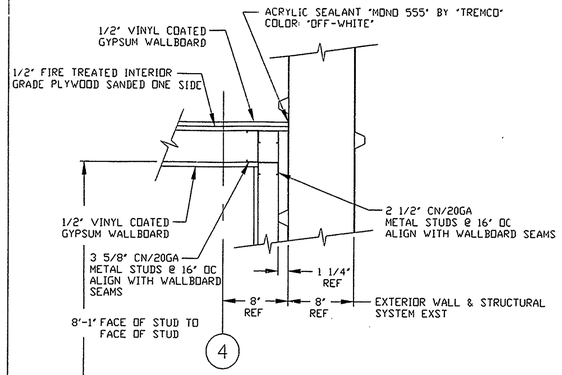

B SH1 (C4) PLAN DETAIL

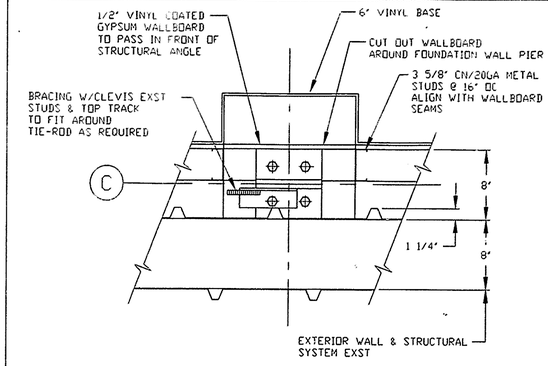

C SH1 (B5) PLAN DETAIL

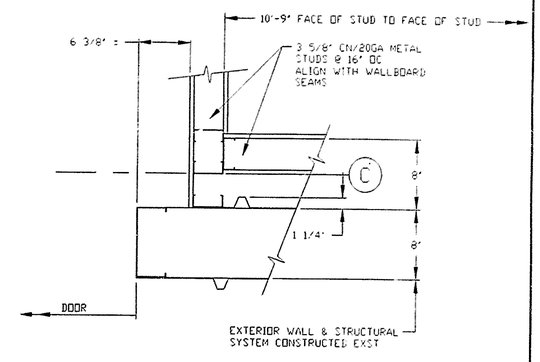

D SH1 (B5) PLAN DETAIL

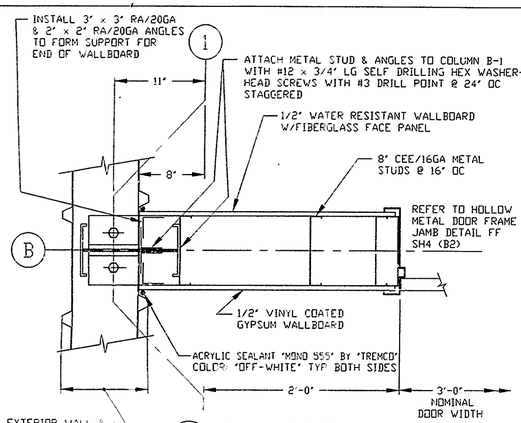

E SH1 (C7) PLAN DETAIL

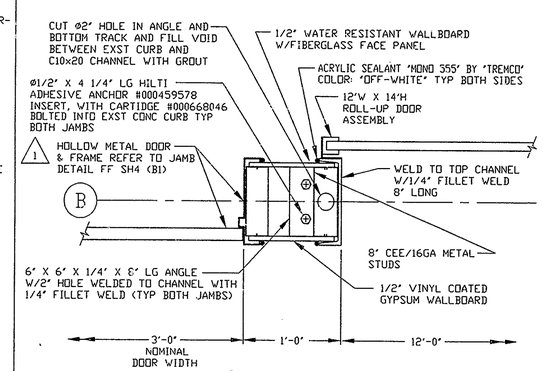

F SH1 (C7) PLAN DETAIL

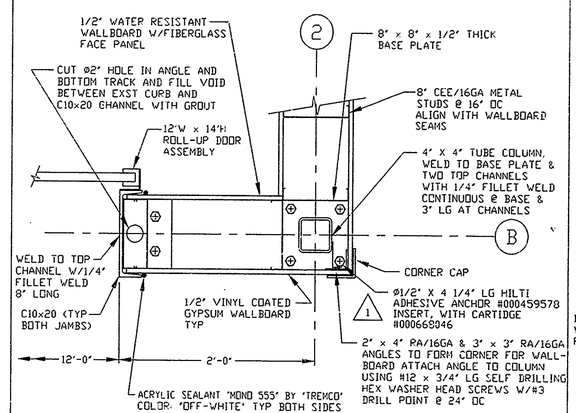

G SH1 (C7) PLAN DETAIL

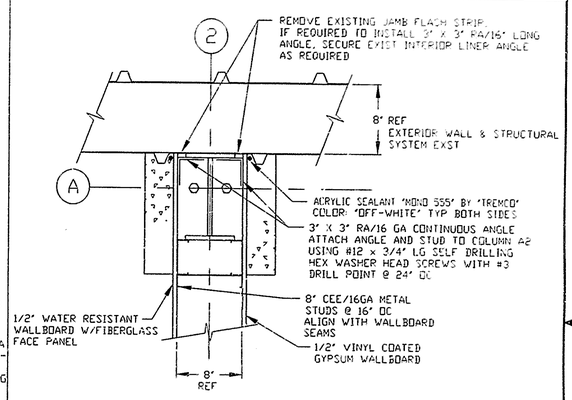

H SH1 (D6) PLAN DETAIL

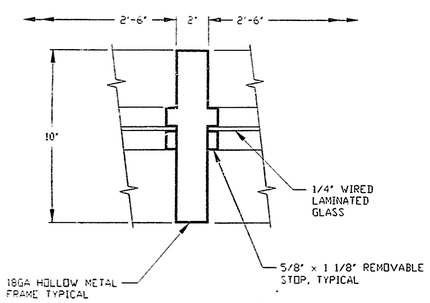

J SH2 (C4) MULLION DETAIL
SCALE: 1 1/2"=1'-0"

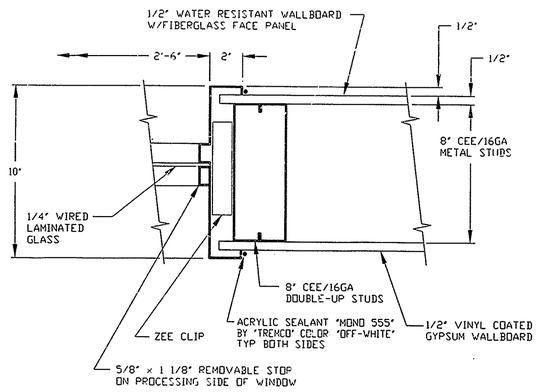

K SH2 (C5) JAMB DETAIL
SCALE: 1 1/2"=1'-0"

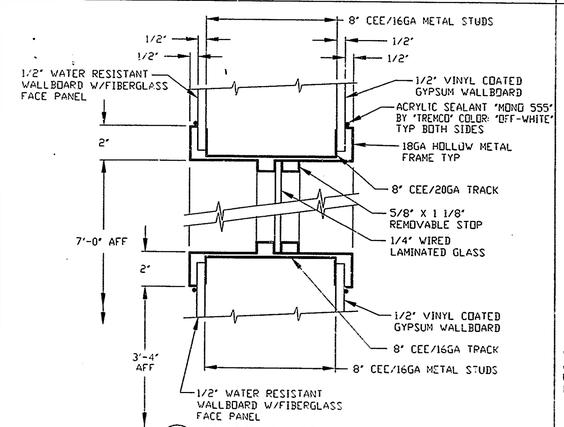

L SH2 (D6) HEAD & SILL DETAIL
SCALE: 1 1/2"=1'-0"

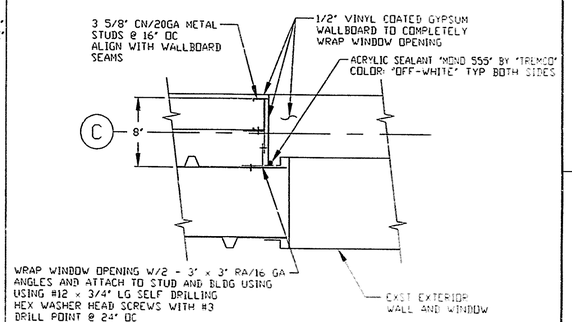

M SH2 (B4) SILL DETAIL

REVISIONS			
REV	DESCRIPTION	DRWN	
0	CR4006 10/10/97	JPH	
1	FCN DRA-0037 12/9/97	JMS	

UNLESS OTHERWISE SPECIFIED ALL DIMENSIONS IN INCHES		DRAFTER D. KUREK	DATE 8/19/97
TOLERANCES		CHECKER H. BARKER	DATE 10/10/97
2PL DEC ±N/A	3PL DEC ±N/A	ENGINEER J. SPARSHOTT	DATE 10/10/97
FRACTS ±1/2"	ANGLES ±N/A	FINISH N/A	
FILE NAME 7493D003			
PLOT SCALE 1=4.00			
D SPEC NO 3117			
NEXT ASSEMBLY			

DO NOT SCALE DRAWING

A/E CONTRACT NO • CODE IDENT NO

FOR WEST VALLEY NUCLEAR SERVICES CO., INC. WEST VALLEY NY

LLW2

ARCHITECTURAL DETAILS

DATABASE LINKED DRAWING

SEE ENGINEERING RELEASE FORM (ER) FOR DRAWING APPROVAL SIGNATURES

DWG SIZE D

SCALE 3"=1'-0" & NOTED

WEIGHT

DWG NO 900D-7493 REV 1

A/E DWG NO

SHEET 3 OF

CAD DRAWING-DO NOT REVISE THIS ORIGINAL

\\DRAFTING\CADA\CHECK\NONCRA\7493D003.DWG Tue Dec 16 14:19:37 1997 HAB