VERIFY ALL DOCUMENTS FOR CURRENT REVISION AND PENDING CHANGES PRIOR TO EACH USE.
INIT_____ DATE_____

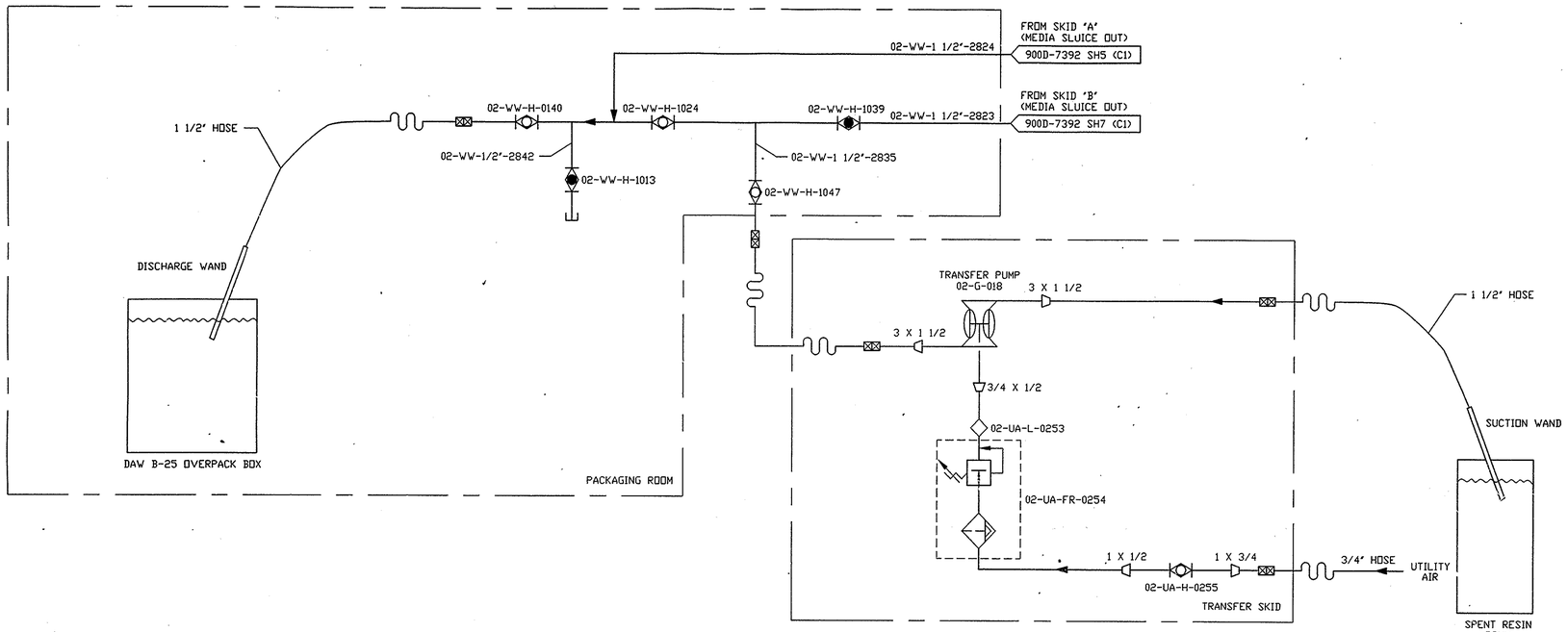

SPENT COLUMN OR DRUM TO B-25 OVERPACK BOX

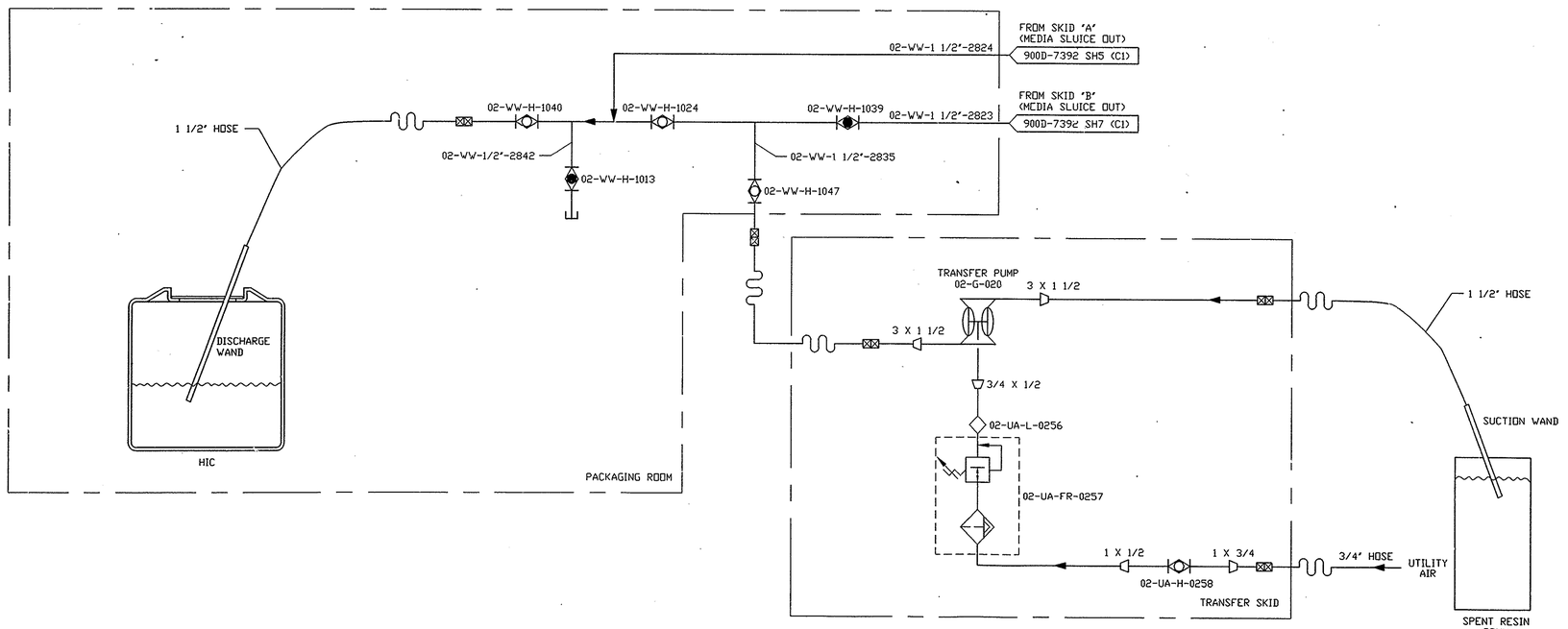

SPENT COLUMN OR DRUM TO HIGH INTEGRITY CONTAINER (HIC)

LEGEND:

⊠ - QUICK DISCONNECT

NOTES:

1 TRANSFER SKIDS 02-G-018 AND 02-G-020 ARE INTERCHANGEABLE

2 SEE WVNS-UPLL-023 FOR LINE LIST AND WVDP-VSL-025 FOR VALVE LIST

REVISIONS			
REV	DESCRIPTION		APPVD
0	EK4304	3/23/99	CCG

UNLESS OTHERWISE SPECIFIED ALL DIMENSIONS IN INCHES

FILE NAME 7125D001

PLOT SCALE 1=1.00

D SPEC NO. 3069

NEXT ASSEMBLY

DRAFTER D. MUELLER	DATE 5/5/97	A/E CONTRACT NO.
CHECKER H. BARKER	DATE 3/23/99	CODE IDENT NO.
ENGINEER F. KOBEL	DATE 3/23/99	FOR WEST VALLEY NUCLEAR SERVICES CO., INC. WEST VALLEY N.Y.

LLW2
RESIN TRANSFER SYSTEM
P&ID

DATABASE LINKED DRAWING. SEE ENGINEERING RELEASE FORM (ER) FOR DRAWING APPROVAL SIGNATURES.

DWG SIZE D

SCALE NONE

WEIGHT

A/E DWG NO.

DWG NO. 900D-7125

REV 0

SHEET 1 OF 1

CAD DRAWING-DO NOT REVISE THIS ORIGINAL

Tue Mar 23 07:52:52 1999 HAB