RR 101 SH 15 OF 21
R.R. & LAKES
EIK

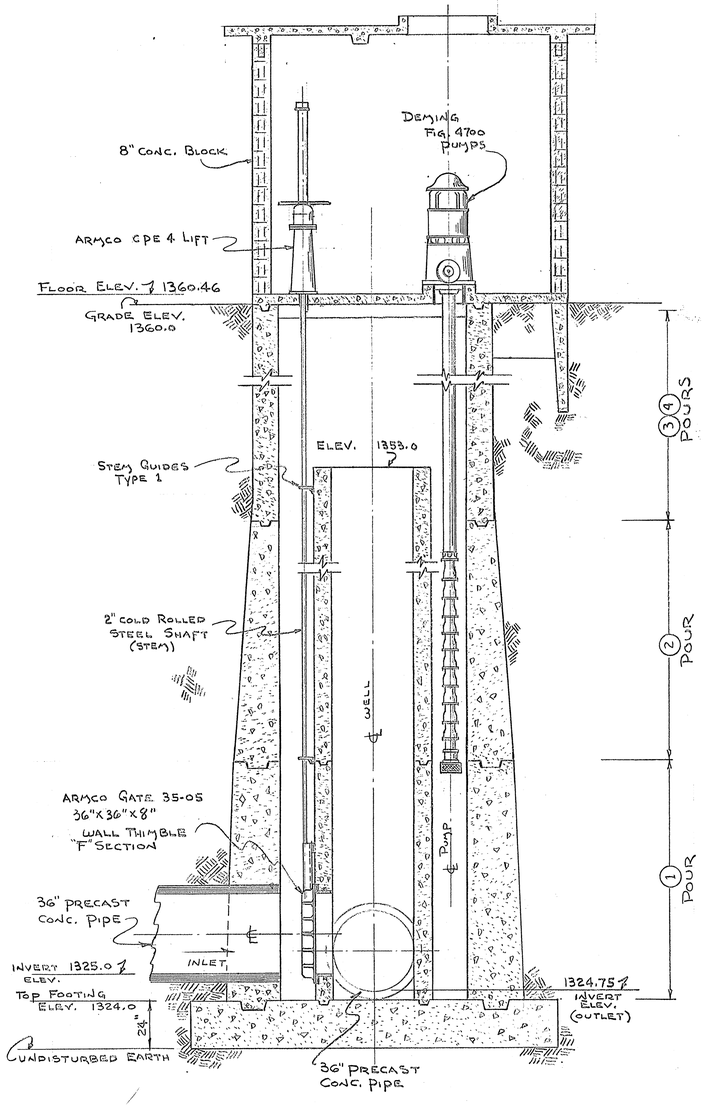

~ PUMPING STATION SECTION ~
3/8" = 1'-0"

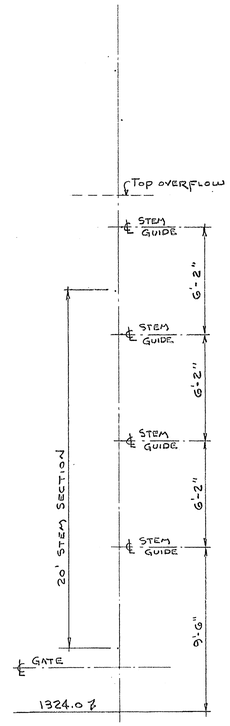

~ SCHEMATIC OF STEM ℄ GUIDE LOCATION ~
NO SCALE

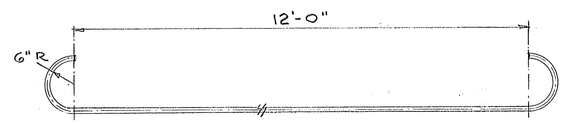

MK 1 ~ #8 ROD
3/4" = 1'-0"
(50 REQ.)

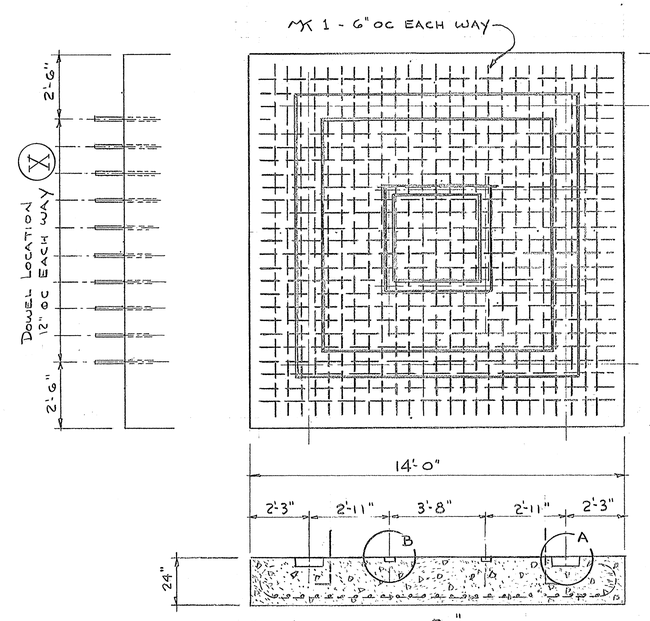

~ FOUNDATION PLAN ~
3/8" = 1'-0"

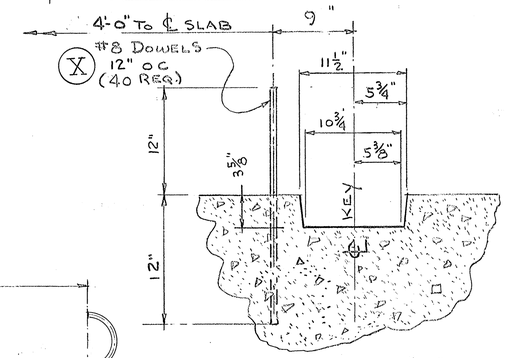

KEY DETAIL "A"
1½" = 1'-0"

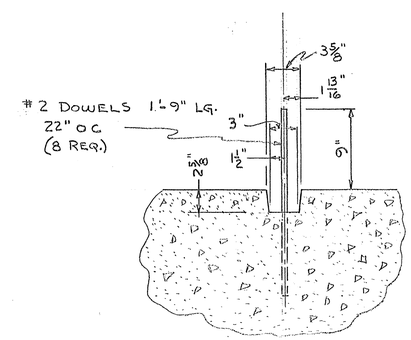

KEY DETAIL "B"
1½" = 1'-0"

NOTE: 4000# CONC. ACI-318-56
DEFORMED STEEL BARS ASTM-A305-56T

~ PUMPING STATION DETAILS ~

SCALE AS SHOWN

2	5/18/84	NO CHANGE, SEE SHTS. 3&4	S.R.P./JEN

REV. JN 3/68

EARL W. EK, P.E. & ASSOCIATES
ENGINEERS
R.R. 101
FEB. 1963

SHEET No. 15 OF 21 SHEETS