VERIFY ALL DOCUMENTS FOR CURRENT REVISION AND PENDING CHANGES PRIOR TO EACH USE.
INIT_____ DATE_____

8B-M-4

SIZE D (ASA)

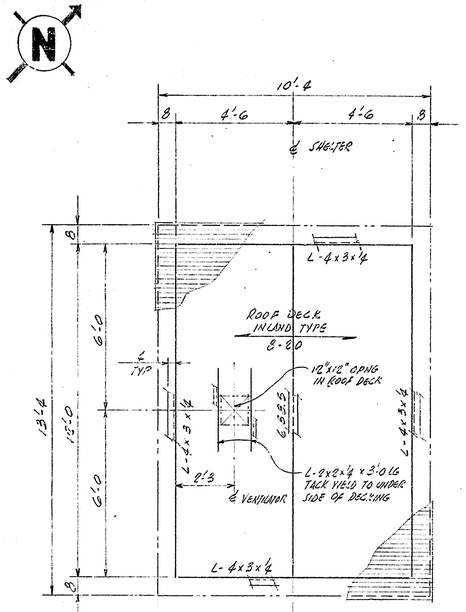

ROOF PLAN

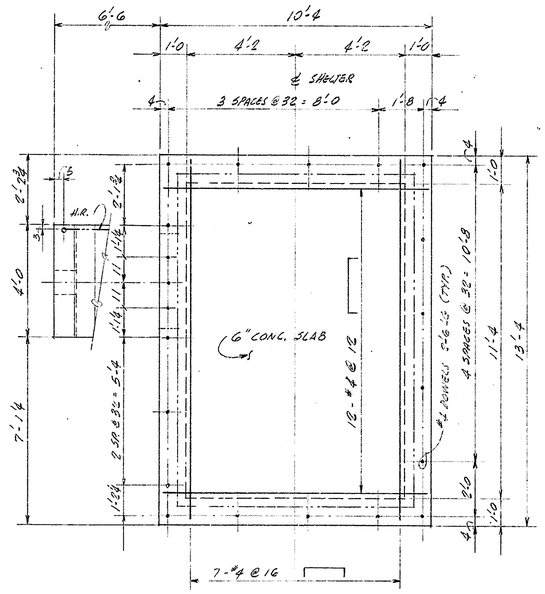

SLAB REINF. PLAN

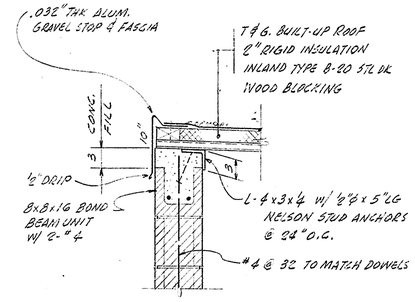

DETAIL 1
1 = 1'-0

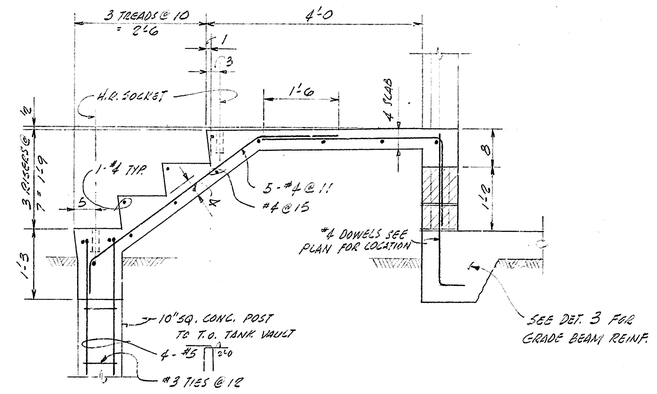

STAIR & LANDING DETAILS
3/4 = 1'-0

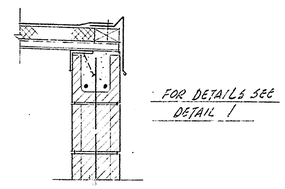

DETAIL 2
1 = 1'-0

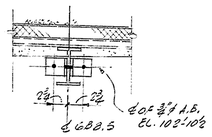

DETAIL 4
1 = 1'-0

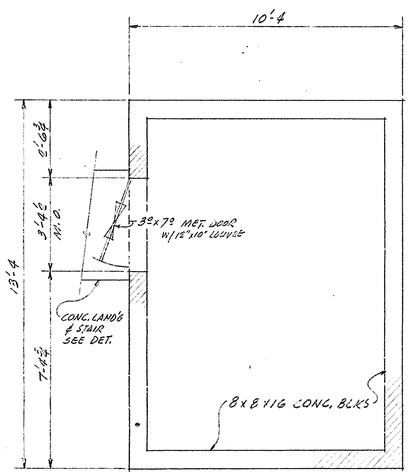

SECTIONAL PLAN

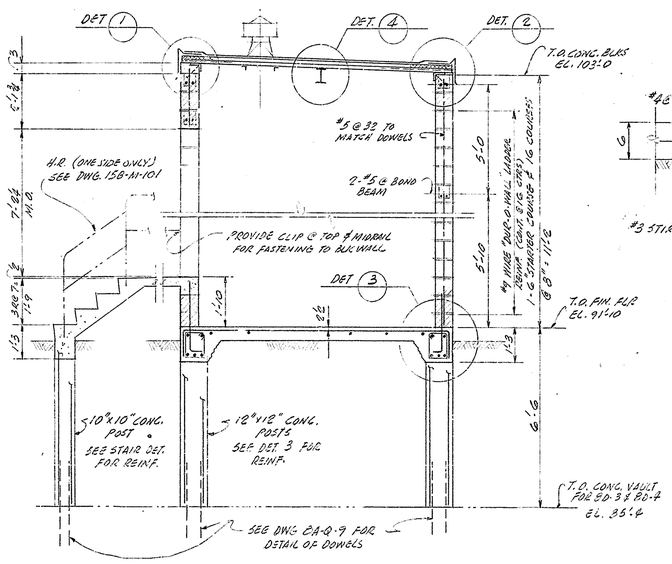

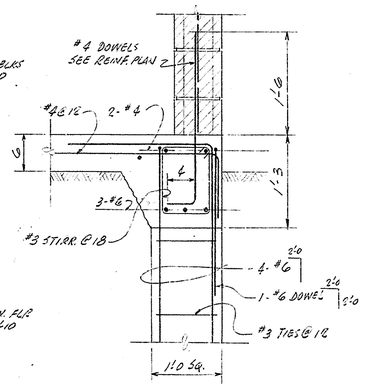

DETAIL 3
1 = 1'-0

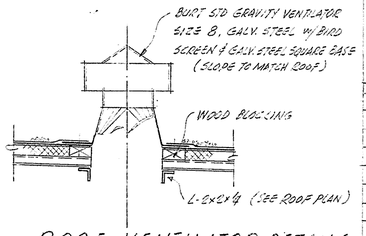

ROOF VENTILATOR DETAILS
1 = 1'-0

LIST OF MATERIAL

ITEM	QUAN	DESCRIPTION	ORDER No.
1	1	CONC. BLOCK SHELTER COMPLETE AS DETAILED INCLUDING FOUNDATION, ETC.	

NOTES:

1. FOR CONSTRUCTION & WORKMANSHIP OF THE CONC. BLOCK WALLS SEE SPECIFICATION No R-14. ALL BLOCKS SHALL BE LAID UP IN STACK BOND UNLESS NOTED OTHERWISE.
2. FOR WELDING ROOF DECK TO SUPPORTING MEMBERS FOLLOW MANUFACTURER'S SPECIFICATION & RECOMMENDATION.
3. FOR LOCATION OF SHELTER SEE DWG. 8A-Q-9
4. FOR PENETRATIONS IN FLOOR SLAB SEE DWG. 8A-L-12

REFERENCE DRAWINGS

PLAN, SECTIONS & DETAILS - VAULT FOR BD-3 & BD-4		8A-Q-9
HANDRAIL DETAILS		158-A1-101
STEEL ROOF DECK	SPEC.	4413-R-12
MASONRY	SPEC.	4413-R-14
PIPING PLAN AT CON-ED VAULT		8A-L-12
PLATFORM AT CON-ED SHELTER		8C-M-5

No.	DATE	REVISIONS	BY	CH'K	DFTG. SUPVR.	ENG'R	CHIEF ENG'R	CLIENT
A	11/22/64	ISSUED FOR CONSTRUCTION	HAL	WAR	WJH			

SCALE 3/8"=1'-0 AND AS NOTED | DESIGNED HAL | DRAWN HAL

BECHTEL CORPORATION
NEW YORK **SAN FRANCISCO** LOS ANGELES

ENGINEERING BY BECHTEL ASSOCIATES

NUCLEAR FUEL SERVICES, INC.
SPENT FUEL PROCESSING PLANT

CONCRETE BLOCK SHELTER
AT CON-ED VAULT

BECHTEL | JOB No. 4413 | DRAWING No. 8B-M-4 | REV. C3

This drawing and the design it covers are the property of BECHTEL CORPORATION. They are merely loaned and on the borrowers' express agreement that they will not be reproduced, copied, loaned, exhibited, nor used except in the limited way and private use permitted by any written consent given by the lender to the borrower.

9-63—2M PRINTED ON DIEPO 1000H-D CLEARPRINT
22X34