VERIFY ALL DOCUMENTS FOR CURRENT REVISION AND PENDING CHANGES PRIOR TO EACH USE.
INIT_____ DATE_____

8A-Q-2

SIZE A

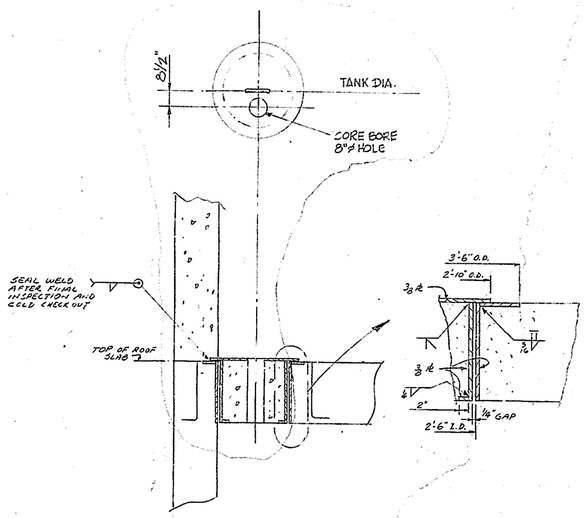

TEMPORARY MANHOLE DETAIL 6

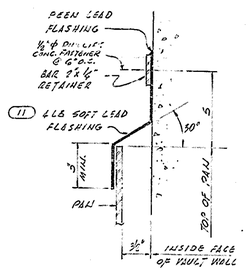

DET. 4A

ALTERNATE FLASHING DET.
3 = 1'-0

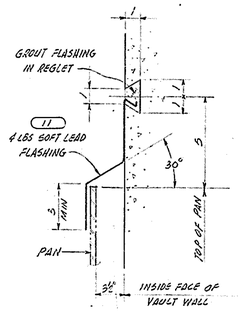

DET. 4

3 = 1'-0

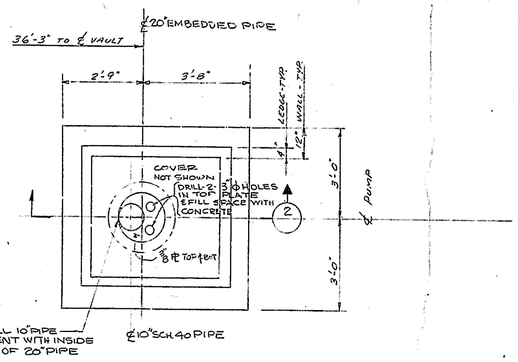

PLAN

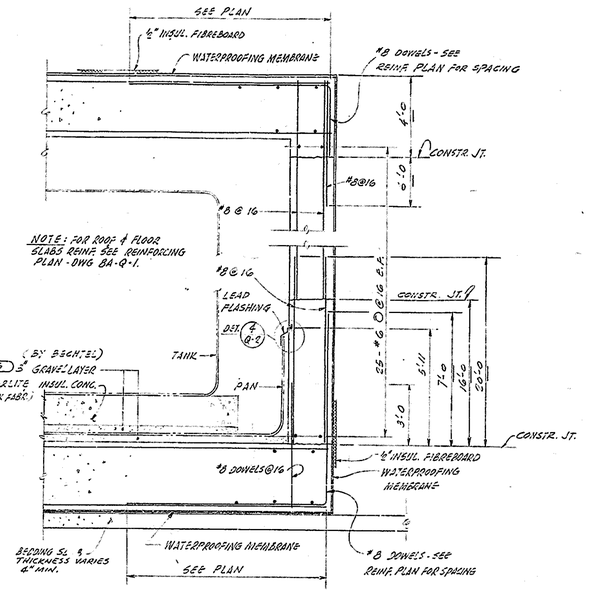

TYPICAL WALL SECTION

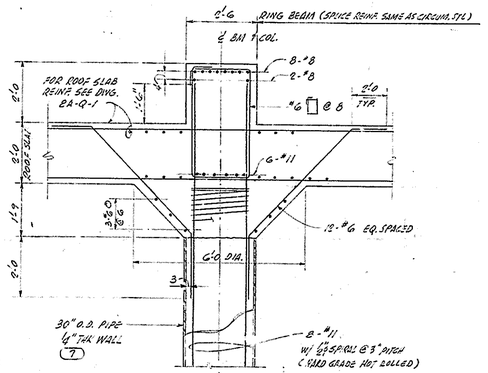

DET. 2

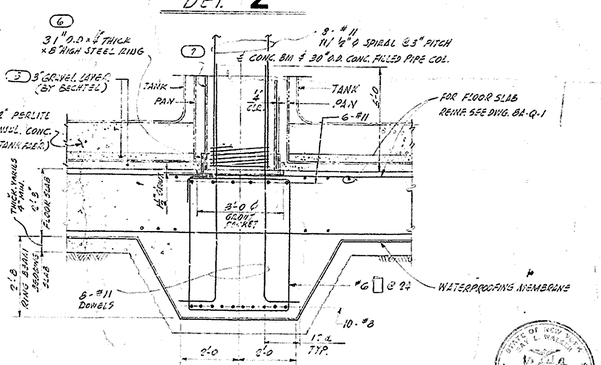

DET. 3

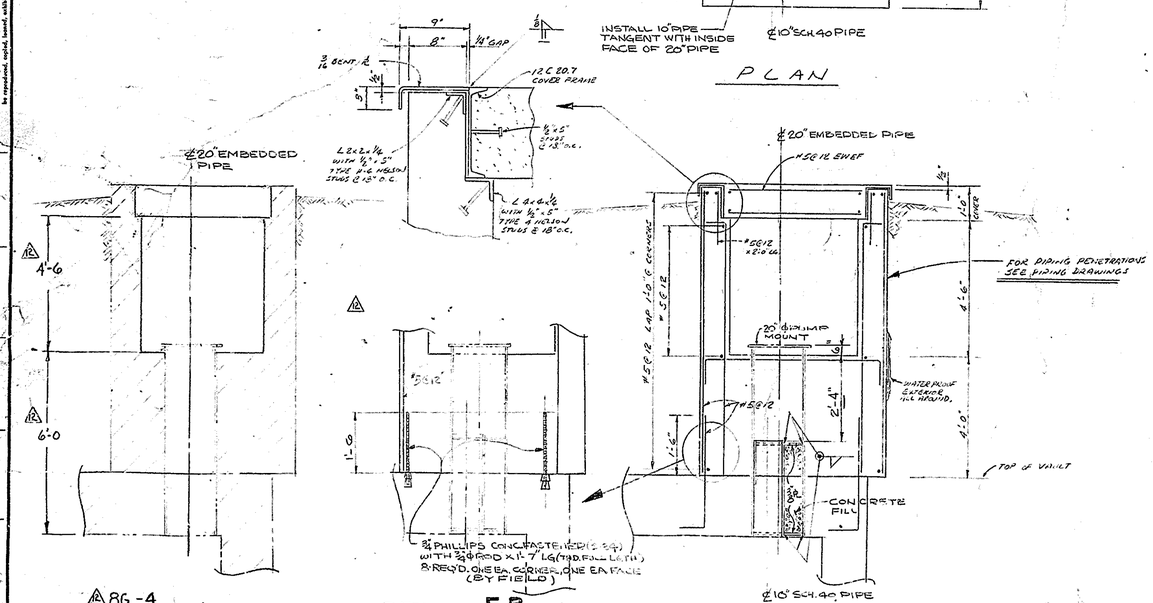

8G-4
PUMP PIT DETAIL 5A

DETAIL 5B
FOR TANK 8D-1 ONLY

SECTION

PUMP PIT DETAIL 5

GENERAL NOTES (CONT.)

12. AFTER BACKFILL IS PLACED AGAINST WALL AND BEFORE ROOF SLAB AND EARTH COVER IS PLACED, THE GROUND WATER LEVEL MUST BE KEPT BELOW EL. 53.50' (THE TOP OF THE BOTTOM SLAB). PUMP MUST BE PROVIDED TO MAKE SURE THIS WATER LEVEL IS NEVER EXCEEDED. FLOTATION OF VAULT MAY OCCUR AT HIGHER WATER LEVELS.
13. WATER MAY NOT BE PLACED IN THE VAULT TO COUNTERACT THE BOUYANCY.
14. WATERPROOFING MEMBRANE SHALL BE PERMACEL 306 POLYVINYL CHLORIDE PIPE WRAP TAPE. LAP SHEETS 3" MINIMUM. USE PERMACEL EZ-4390 PRIMER ON CONCRETE SURFACES BEFORE APPLYING TAPE.
15. THE 3" GRAVEL LAYERS UNDER TANK & PAN SHALL BE OBTAINED FROM THE OLEAN GRAVEL CO. INC. IT SHALL BE SCREENED TO PASS A #4 SIEVE AND BE RETAINED ON A #8 SIEVE.
16. THE VAULT WALLS SHALL BE CONSTRUCTED TO A TOLERANCE OF ± 2" ON THE DIAMETER.

FOR GENERAL NOTES AND REFERENCE DRAWINGS SEE DWG. 8A-Q-1.

NO.	DATE	REVISIONS	BY	CHK'D	ENGR'D	CHIEF ENGR'D	CLIENT
11	7/7/76	REVISED PER ECN 17604	EJG	JWO			
10	11/1/74	DELETED REFERENCE ELEV. on DET. 5 & 6, REV. BEDDING SLAB THICK. ON TYP. SECT. & DET. 3	WCH				
9	7/26/74	ADDED DETAIL 5A, 8" O SCH 40 PIPE TO DETAIL 5	S.F.				
8	7/11/74	ADDED "ALTERNATE" FOR MANHOLE - DET. 6	WCH	WCH	WCH		
7	6/14/74	ADDED DET. 5 & 6, REV. FASTENER DET. 4A	WCH	WCH	WCH		
6	3/14/74	REV. GRAVEL LAYER ON TYP. WALL SECT. & DET. 3	WCH	WCH	WCH		
5	1/11/74	ADDED GENERAL NOTE #15 & #16, REV. TYP. WALL SECT. & DET. 3	WF				
4	7/16/73	REV. REINF. DETAILS @ TYP. WALL SECTION	WF	WCH	WCH		
3	3/11/73	DELETED PIPE COL. DET. 2, REV. 18" O. COL.	WCH	WCH	WCH		
2	1/24/73	REV. TYP. WALL SECTION REINF. ADDED GENERAL NOTES	WF	WCH	WCH		
1	7/19/72	ECN 10341	SN	JWO			
0	7/19/72	ISSUED FOR APPROVAL	WCH				

SCALE 1/4" = 1'-0" & AS NOTED | DESIGNED | DRAWN WCH

BECHTEL CORPORATION
NEW YORK SAN FRANCISCO LOS ANGELES

ENGINEERING BY
BECHTEL ASSOCIATES

NUCLEAR FUEL SERVICES, INC.
SPENT FUEL PROCESSING PLANT

SECTIONS & DETAILS SHT. 1
VAULT FOR 8D-1 & 8D-2

BECHTEL | JOB NO. 4113 | DRAWING NO. 8A-Q-2 | REV. 12