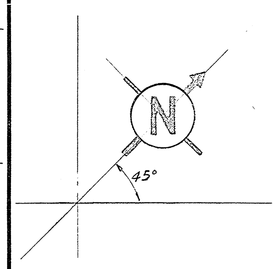

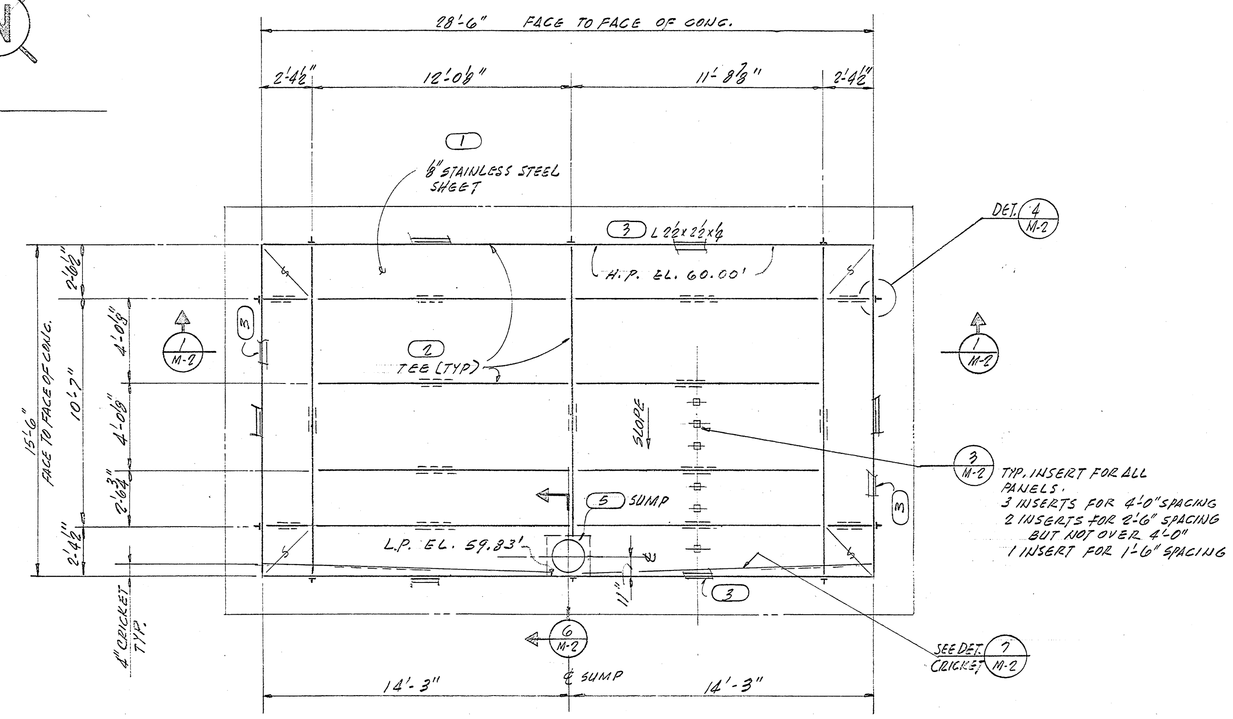

PLAN

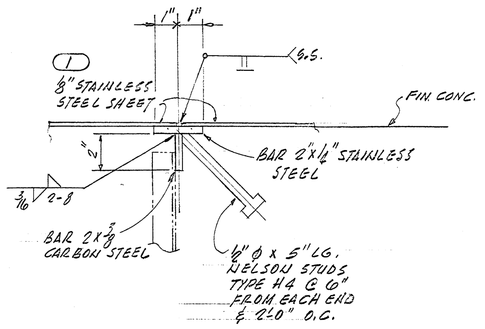

DETAIL 4 2

NO SCALE

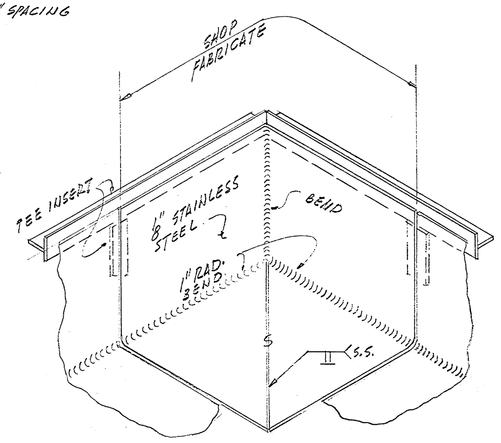

DETAIL 5

NO SCALE

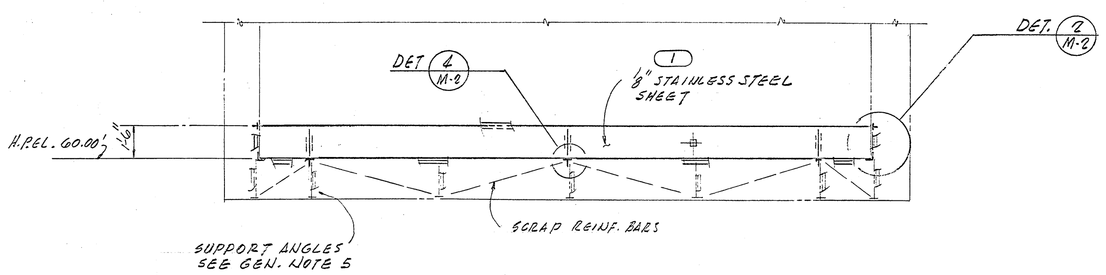

SECTION 1

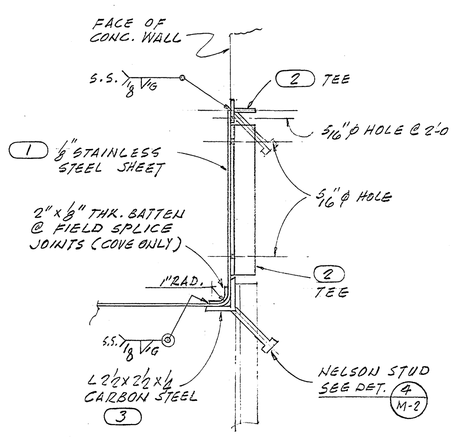

DETAIL 2

½" = 1'-0"

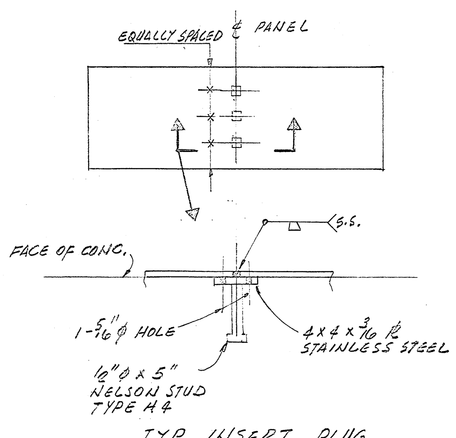

TYP. INSERT PLUG
WELD FOR WALL & FLOOR LINERS

DETAIL 3

NO SCALE

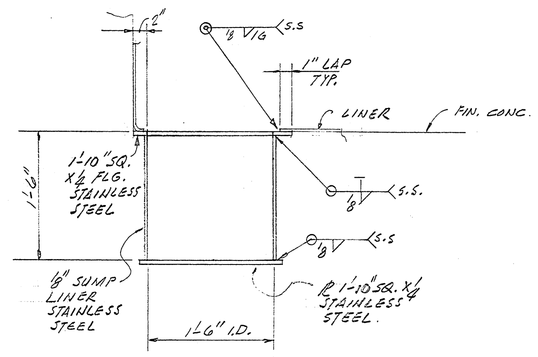

SECTION 6

½" = 1'-0"

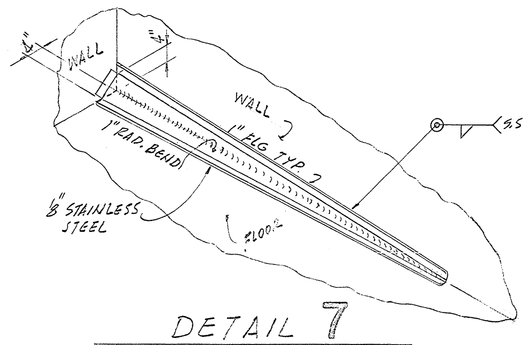

DETAIL 7

NO SCALE

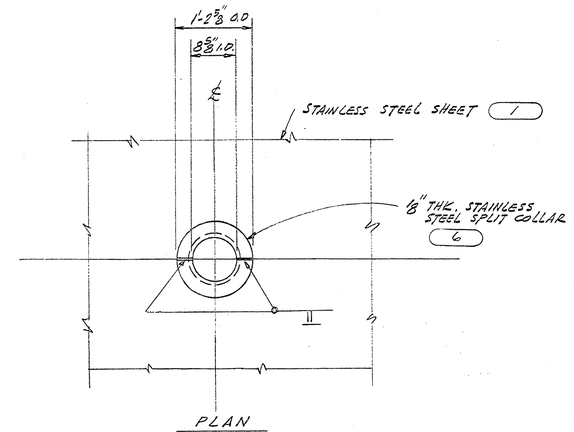

PLAN

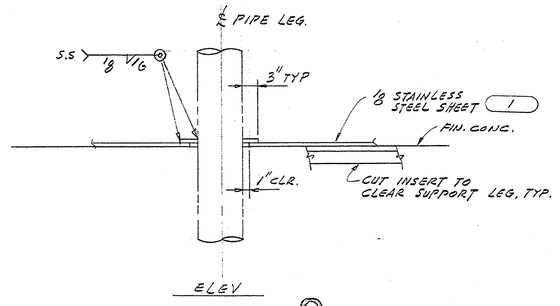

ELEV

DETAIL 8

TYP VESSEL SUPPORT LEGS PENETRATION DETS.
(PERIMETER LEGS)

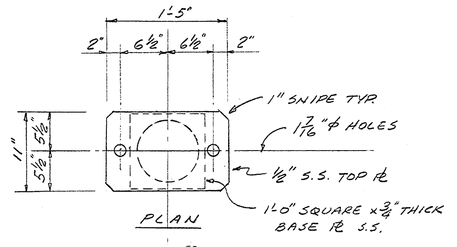

PLAN

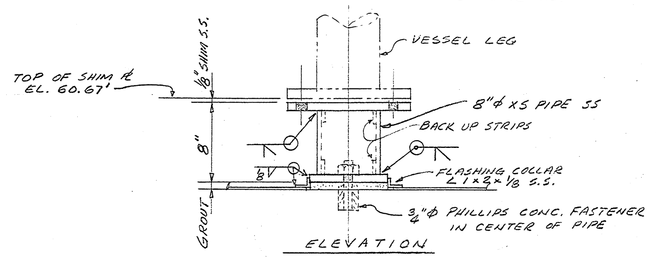

ELEVATION

NOTE - FOR INSTALLATION SEQUENCE SEE DET 3, DWG 8A-Q-9.

DETAIL 9 2

VESSEL CENTER SUPPORT & FLASHING DETAIL

LIST OF MATERIAL

ITEM	QUAN.	DESCRIPTION	ORDER NO.
1	1 LOT	⅛" THK. STAINLESS STEEL SHEET LINER	15M-1
2	255	LIN. FT. TEE PER DET. 4 (STAINLESS STL.)	15M-14
3	88	LIN. FT. L 2½x2½x¼ PER DET. 2 C.S.	15M-14
4	30	INSERTS PER DET. 3 (STAINLESS STL.)	15M-14
5	1	SUMP LINER PER SECT. 6 (STAIN. STL.)	15M-14
6	12	STAINLESS STEEL COLLARS PER DET. 8	15M-1
7	2	S.S. SUPPT LEGS & FLASHING PER DET 9.	—

GENERAL NOTES

1. STAINLESS STEEL SHALL BE TYPE 304 L, TYPE 2D FINISH.
2. ALL WELDS SHALL BE ⅛" EXCEPT AS NOTED.
3. ALL WELDING SHALL BE IN ACCORDANCE WITH APPLICABLE PORTIONS OF THE AWS CODE AND PARAGRAPH 4 OF SPECIFICATION 6413-C-2.
4. ALL SHARP EDGES OF SHEARED PLATES SHALL BE GROUND OFF. ALL WELDS WHICH PROJECT ABOVE FINISHED SURFACES SHALL BE GROUND SMOOTH.
5. SUGGESTED METHOD OF SUPPORTING FRAMING MEMBERS PROVIDES FLEXIBILITY IN ALIGNING MEMBERS FOR USE AS SCREEDS. MEMBERS MAY BE CLAMPED TO SUPPORT ANGLES PRIOR TO WELDING TO INSURE PROPER ALIGNMENT. SUGGESTED SIZE OF SUPPORTS L 2 x 2 x 3/16, SUGGESTED SPACING, SIX FEET. ADDITIONAL POSTS & BRACING SHOULD BE PROVIDED IF REQUIRED TO INSURE RIGIDITY & ALIGNMENT OF FRAMING.
6. LINER FABRICATION TO BE COMPLETELY SEAL WELDED UNLESS OTHERWISE SHOWN ON DWG.
7. —s— INDICATES SHOP WELD.

REFERENCE DRAWINGS

PLAN, SECTS. & DETS. VAULT FOR 8D-3 & 8D-4	8A-Q-9

No.	DATE	REVISIONS	BY	CH'K	DEPD. SUPV'R	ENG'R	CHIEF ENG'R	CLIENT
2	10/26/62	ADDED DET. 9 PER ECO-277	WCM	PMJ				
1	7/26/62	ISSUED FOR CORRECTION OF DESIGN - FIND # 2. ADDED NOTE "NOT FOR CONSTRUCTION".	WCM		WCM			
0	7/11/62	ISSUED FOR CONSTRUCTION	GCW	PMJ				

SCALE 1/2" = 1'-0" & AS NOTED — DESIGNED — DRAWN GCW

BECHTEL CORPORATION

SAN FRANCISCO — NEW YORK — LOS ANGELES

ENGINEERING BY
BECHTEL ASSOCIATES

NUCLEAR FUEL SERVICES, INC.
SPENT FUEL PROCESSING PLANT

PLAN AND DETAILS
METAL LINER AND INSERTS
VAULT FOR 8D-3 AND 8D-4

JOB No.	DRAWING No.	REV.
4413	8A-M-2	2

This drawing and the design it covers are the property of BECHTEL — They are newly loaned and as the borrowers' express agreement that they will not be reproduced, copied, loaned, exhibited, nor used except in the limited way and purpose was permitted by any written consent given by the lender to the borrower.