Working Copy

SDD:	WH00
Revision Number:	13
Revision Date:	June 24, 2009

U.S. DEPARTMENT OF ENERGY

WASTE ISOLATION PILOT PLANT

WASTE HANDLING SYSTEM (WH00)

SYSTEM DESIGN DESCRIPTION (SDD)

Prepared by
Washington TRU Solutions LLC
Carlsbad, New Mexico

For

U.S. Department of Energy

Cognizant Engineer:	Tim Chambers	04/30/09
	Approved for Use	Date
Cognizant Manager:	Curtis Chester	04/30/09
	Approved for Use	Date

SDD WH00

TABLE OF CONTENTS

CHANGE HISTORY v

SUMMARY S-1

Subsystem		Part/Chapter
WH00	General Functions and Requirements	G.WH00
WH01	TRUPACT-II Handling Equipment Requirements Design and Operation	Part I-I, WH01
WH02	CH TRU Waste Handling Equipment Requirements Design and Operation	Part I-II, WH02
WH04	Site-Derived Waste Handling Equipment Requirements Design and Operation	Part I-III, WH04
WH03	RH TRU Waste Handling Equipment Requirements Design and Operation	Part II-I, WH03
WH05	Hot Cell Subsystem Requirements Design and Operation	Part II-II, WH05
Appendices		I-II, App.

TABLE OF CONTENTS

SUMMARY LIST OF FIGURES

Figure Description Page No.

Figure S-1 - CH TRU Waste Handling Equipment 3
Figure S-2 - RH TRU Waste Handling Equipment 4

CHANGE HISTORY

REV. NO	REV. DATE	PAGES/SECTIONS AFFECTED	APPROVED BY
0.00	1091	Sections 1.0, 2.0, & 3.3	ECP 1-WH91-58 ECO No. 5606
1	9/92	Revised Section 2,0, pages 2-2, & 2-28	ECP 1-WH91-58 ECO No. 6380
1	9/92	Section 3.0, 4.0, 5.0, 6.0, 7.0, & App.	ECP 1-WH91-58 ECO No. 6380
2	9/94	All Sections & App.	ECP 1-WH93-147 ECO No. 7039 ECP 1-WH93-104 ECO No. 7161 ECP 1-WH93-167 ECO No. 6986 ECO No. 7177 ECO No. 7275 ECO No. 7264 ECO No. 7395 ECO No. 7438
2	11/95	Page No. Section App-11 Appendix D 2-6 2.2.2.18 & 5.2.5 3-179 3.6.2.1 & 3.6.2.1.1 3-66 3.5.2.3.4 3-4, 3-28 3.2.1 & 3.5.1.4.7 3-28A 3.5.1.5 2-1, 2-2 2.1.9, 2.2.1.5, 3-12, 3-125 3.3.2, 3.3.3, 3.3.4 3-126 3.5.4, & 3.5.4.1	 ECO No. 7498 ECP 1-WH95-004 ECO No. 7552 ECP 1-WH95-014 ECO No. 7604 ECO No. 7682 ECO No. 7699 ECP 1-GP95-049 ECO No. 7717
2	2/96	Page No. Section viii, ix, TOC xii, xiii TOC S-1 Summary 1-1 1.0-1.7 2-1 2.1.7 2-2 2.2.1.1 2-4 2.2.2.2 2-5 2.2.2.10, 11 2-6 2.2.2.18-22 2-9 2.2.3.20 2-11 2.2.4.1, 2, 6, 7 2-11A 2.2.5	ECP 1-WH94-047 ECO No. 7328 ECP 1-WH95-062 ECO No. 7753 ECP 1-WH95-037 ECP 1-WH95-072 ECO No. 7829 ECO No. 7818 ECP 1-WH95-088 ECO No. 7999 ADD. #1 & #2 ECO No. 8006 ECO No. 8022

REV. NO	REV. DATE	PAGES/SECTIONS AFFECTED		APPROVED BY
		2-15	2.4.1	ECP 1-WH95-095
		2-16	2.4.8.1, 2, 3	ECO No. 8026
		2-17	2.6.2	ECO No. 8048
		2-18	2.7.1	
		2-19	2.8.3.2	
		2-21	2.11	
		3-2	3.2	
		3-4	3.2.1	
		3-6	3.2.2	
		3-13	3.4	
		3-14	Figure 3.4-1	
		3-16	3.4.2	
		3-18	3.5.1.2	
		3-33	3.5.1.6	
		3-34	Figure 3.5-104	
		3-35	3.5.2.1.2	
		3-37	Blank	
		3-38	3.5.2.1.4	
		3-43	3.5.2.1.8	
		3-51	3.5.2.2.8	
		3-62	3.5.2.3.1	
		3-65	Blank	
		3-66	3.5.2.3.1, 4	
		3-69	3.5.2.3.4	
		3-87	3.5.3.2.4	
		3-126	3.5.4.1	
		3-178	Table 3.6.2-1	
		3-181	3.6.2.6	
		3-203	3.7.1.1, 2	
		4-2	4.2.1	
		4-4	4.2.1.2.2	
		4-5	4.2.1.2.2	
		4-6	4.2.1.4, 4.2.1.4.1, 2	
		4-7	4.2.1.4.2	
		4-8	4.2.1.6.1	
		4-9	4.2.1.6.2	
2		Page	Section	See above
		4-13	4.2.2	
		4-21	4.2.2.7.1	
		4-25	4.3.1, 4.3.1.1, 2	
		5-2	5.2.5	
		5-3	5.3.2	
		6-1	6.1	
		7-2	7.1	
		7-3	7.2.1.5	
		7-5	7.2.2.12	
		7-13	7.3	
		7-15	7.3.2.6, 7	
		7-16	7.3.2.10	
		7-22	7.4.1.4	

REV. NO	REV. DATE	PAGES/SECTIONS AFFECTED	APPROVED BY
		APP-7 APPENDIX C APP-8 APPENDIX D APP-9 APPENDIX E APP-10 APPENDIX F APP-11,12 APPENDIX F-1 APP-13,14,15 APPENDIX F-1 APP-16 APPENDIX F-2 APP-17,18 APPENDIX G	
3	8/96	All Sections	ECO No. 8214 ECP 1-WH95-062 ECO No. 8191 ECP 1-WH96-038 ECO No. 8269 ECO No. 8291 ECO No. 8371 ECO No. 7178
3	12/96	Page Section xi List of Figures 2-3 2.2.1.8 3-4 3.2.1 3-13 3.3.1 3-62 3.5.2.2.5.4 3-67 Figure 3-115 4-2 4.2.1 4-4, 4-5 4.2.1.2.2 4-11 4.2.1.7 5-1 5.1.3 APP-17 Appendix G	ECP 1-WH96-050 ECO No. 8372 ECO No. 8394
3	9/97	Page No. Sections v, vi, vii, viii TOC x, xi, xii, xiii LOF xviii Change History S-3 Figure S-2 1.0 1.2, 1.4 2-1 2.1.10 2-2 2.2.1.5 2-5 2.2.2.2/2.2.2.8 2-6 2.2.2.12 2-7 2.2.2.18 2-12 2.2.4.4, 2.2.4.5 2-17 2.4.1 2-19 2.5.3 2-24 2.11 3-1,2,3 3.1, 3.2 3-4,5,6 3.2.1, 3.2.2 3-9 3.2.4 3-46A Figure 3.5.110 3-47 3.5.2.1.1 3-49 3.5.2.1.4 3-51 3.5.2.1.9	ECP 1-WH95-071 ECO No. 8529 ECP 1-WH97-019 ECO No. 8587 ECP 1-WH97-044 ECO No. 8658 ECP 1-WH97-044 ECO No. 8658 ECO No. 8681 ECP 1-WH97-071 ECO No. 8667 ECP 1-WH97-054 ECO No. 8699 ECP 1WH97-078 ECO No. 8712

REV. NO	REV. DATE	PAGES/SECTIONS AFFECTED	APPROVED BY
		3-55A Figure 3.5.111 3-63,64 3.5.2.2.8/3.5.2.2.10 3-69,70,71 3.5.2.3/3.5.2.4.1 3-73A,73B Figures 3.5-122,3.5-123 3-73C,73D Figures 3.5-124,3.5-125 3-73E Figure 3.5-126 3-74 3.5.2.4, 3.5.2.4.1 3-76 3.5.2.4.6 4-1,2,3 4.0/4.2.1.2 4-4,5,6 4.2.1.2.1/4.2.1.4 4-7,8 4.2.1.4.2/4.2.1.6.1 4-9-12A, 13 4.2.1.6.2/4.2.1.10.2 4-27,28 4.3.3 5-2 5.2.5 7-3 7.2.1.3, 7.2.2, 7.2.2.1 7-5,6,6A 7.2.2.8/7.2.3.2 7-14,15 7.3.2.1 7-17,17A 7.3.2.14/7.3.2.15 7-24,25,26 7.4.2.1/7.4.3.2 APP-3,4 Appendix B APP-16 Appendix F-2	
3	9/97	Page Section x List of Figures 2-5 2.2.2.2 2-7, 7A 2.2.2.19,20,21,22,23,24 2-7B, 7C Figures 2-2, 2-3 2-8 2.2.3.2 2.17 2.4.1 2-20 2.6.2, 2.7.1 2-24 2.11 4-2 4.2.1 4-14 4.2.2	1-WH97-029 ECO No. 8737
4	3/01	All Sections	ECO No. 8800 ECO No. 8804 ECO No. 8864 ECO No. 8875 ECO No. 8890 ECO No. 8893 ECO No. 8907 2-WH98-018 ECO No. 9169
5	07/03	WH02 Figure WH I-II-6 Figure WH I-II-16 WH03 WH03 Figure WH II-I-8 WH03 WH03 WH02 Section 2.2.3.3 WH01	ECO No. 8923 ECO No. 9283 ECO No. 9283 ECO No. 9409 Addendum 10 ECO No. 9409 Addendum 13 ECO No. 9724

REV. NO	REV. DATE	PAGES/SECTIONS AFFECTED	APPROVED BY
		WH02 WH01 WH05 WH03 WH00, Figure S-2 WH03 WH02 WH03 WH03 WH03 WH03 WH03 WH00G WH03 WH00G Section 3.1 WH03 WH05 WH03 and WH05	ECO No. 9783 ECO No. 9783 ECO No. 10127 ECO No. 10142 ECO No. 10260 Addendum 4 ECO No. 10380 ECO No. 10380 ECO No. 10182 ECO No. 9711 ECO No. 9710 ECO No. 9710 Addendum 10 Addendum 11 ECO No. 9409 ECO No. 10556 ECO No. 10556 ECO No. 10539 Addendum 2 ECO No. 10608 ECO No. 10608 ECO No. 10608 ECO No. 10608 Addendum 1
6	09/03	WH02.I-II, Section 3.5.2.6	ECO No. 9282 Addendum 4
7	04/04	WH03.II-I: Section 3.5.2.2 WH03.II-I: Section 3.5.2.3 (changes no longer valid per revision 5) Summary: Figure S-2 WH00G: Sections 1.1, 2.3.6 WH03.II-I: Sections 2.2, 2.2.1, 2.2.2, 2.2.3, 2.2.21, 2.2.25, 2.2.4.2, 2.8.3, 3.2, 3.4.1.1, 3.4.2, 3.5.1, 3.5.1.13 WH03.II-I: Sections 3.5.2.1, 3.5.2.2, 3.5.2.5, 3.5.2.7, 3.5.2.9, 3.6, 3.6 Table II-I-1, 3.6.3, 3.6.4.1 WH03.II-I: Sections 3.6.4.2, 3.6.4.3, 3.6.4.4 WH03.II-I: Section 3.6.4.6 WH03.II-I: Section 4.0	ECO No. 9354 Addendum 5 ECO No. 9354 Addendum 5 ECO 10738 ECO 10738 ECO 10738 ECO 10738 ECO 10738 ECO 10738 ECO 10738

REV. NO	REV. DATE	PAGES/SECTIONS AFFECTED	APPROVED BY
		WH03.II-I: Sections 5.3, 5.4.1, 5.4.2, 5.5, 7.0	ECO 10738
		WH03.II-I: Figures WH II-I-4, WH II-I-7, WH II-I-33	ECO 10738
		WH05.II-II: List of Figures	ECO 10738
		WH05.II-II: Sections 2.2.8, 2.2.24 - 2.2.28, 2.4, 3.1, 3.5.1, 3.5.1.1, 3.5.1.3.4, 3.5.1.3.5 - 3.5.1.3.7, 3.5.1.4, 3.5.1.4.1 - 3.5.1.4.3	ECO 10738
		WH05.II-II: Section 3.6 Table II-II-1, 3.6.6, 3.6.7	ECO 10738
		WH05.II-II: Section 3.7.1, 3.7.1.3/4, 5.2, 5.4, 5.5	ECO 10738
		WH05.II-II: Figure WH II-II-1, Figure WH II-II-19, add Figures WH II-II-38 thru 44	ECO 10738
		Appendix B	ECO 10738
7	04/04	WH02.I-II: Sections 2.2.2.4 (change superseded by ECO 10971), 3.2, 3.5.2.3, 3.6.1, 3.6.1.1, 4.2	ECO 10552
		Summary: Summary, Figure S-1.	ECO 10971
		WH00: Sections 2.3.3, 2.4.8, 2.10, 3.1, 3.2, 3.4, Figure G-1.	ECO 10971
		WH01.I-I: Title; List of Figures; Sections 2.2.1.1, 2.2.1.2, 2.2.1.3, 2.2.1.4, 2.2.1.5, 2.2.1.6, 2.2.2.1, 2.2.2.2, 2.2.2.3, 2.2.2.4, 2.2.2.5, 2.2.2.6, 2.2.2.7, 2.2.2.8, 2.3, 2.4.1, 2.8.1, 2.8.2, 2.8.3, 3.0, 3.1, 3.2, 3.5.1, 3.5.2, 3.5.3, 3.5.6, 3.5.7, 3.5.8, 3.5.9, 3.5.10, 3.5.10.1, 3.5.10.2, 3.5.11, 3.5.12, 3.5.13, 3.5.14, 3.6, 3.6.1, 3.6.2, 3.6.4, 3.7.1.1, 3.7.1.2, 3.7.1.3, 3.7.1.4, 3.7.2.1, 5.2, 5.5.1, 5.5.2, 7.0; Figures WH-I-I-2, WH-I-I-3, WH-I-I-4, WH-I-I-5, WH-I-I-6, WH-I-I-7, WH-I-I-8, WH-I-I-9, WH-I-I-10, WH-I-I-12, WH-I-I-13	ECO 10971
		WH02-I-II: List of Figures; Sections 2.2.1.1, 2.2.1.5, 2.2.1.7, 2.2.1.8, 2.2.1.9, 2.2.2.1, 2.2.2.2, 2.2.2.3, 2.2.2.4, 2.2.2.5, 2.2.2.6, 2.2.3.1, 2.2.3.2, 2.2.3.3, 2.3.1, 2.3.3, 2.3.4, 2.4.2, 2.8.2, 3.2, 3.4.1.1, 3.5.1.1, 3.5.1.2, 3.5.1.3, 3.5.1.6, 3.5.1.7, 3.5.1.8, 3.5.1.9, 3.5.1.10, 3.5.1.11, 3.5.2.1, 3.5.2.2, 3.5.2.3, 3.5.2.4, 3.5.2.4.1, 3.5.2.4.2, 3.5.2.5, 3.5.2.5.1, 3.5.2.5.2, 3.5.3.2, 3.5.3.4, 3.5.3.5, 3.5.3.6, 3.5.3.7, 3.5.3.8, 3.6, 3.6.1, 3.6.2, 3.6.3, 3.6.3.1, 3.6.4, 3.6.5, 3.6.6, 3.7.1.1, 3.7.1.4, 3.7.2, 4.1, 5.2, 5.5.6, 7.0; Figures WH-I-II-1, WH-	ECO 10971

REV. NO	REV. DATE	PAGES/SECTIONS AFFECTED	APPROVED BY
		I-II-2, WH-I-II-3, WH-I-II-4, WH-I-II-5, WH-I-II-6, WH-I-II-7, WH-I-II-8, WH-I-II-9, WH-I-II-10, WH-I-II-11, WH-I-II-12, WH-I-II-13, WH-I-II-14, WH-I-II-15, WH-I-II-16, WH-I-II-17, WH-I-II-18, WH-I-II-19.	
8	07/04	WH02.I-II: Sections 2.2.16, 2.2.31, 2.4.2, and 3.5.3.2.	ECO No. 11056
9	08/05	WH03.II-I Sections: 2.2.26, 2.4.2, 3.5.3.1, 3.5.3.18, 3.5.3.19 Figures added WH-II-I-48 and WH-II-I-49	ECO No. 9906
10	08/05	WH00 - G 2.0, 2.3.3 WH01.I-I 2.4.1, 2.4.2 WH02 I-I 2.2.3.1, 2.4.2, 3.5, 3.5.3.2, 3.5.3.8 WH03 II-I 2.4.2, 3.5.3.1.8, 3.5.3.1.10, 3.3.1.11 WH04 I-III 2.4.1 WH05 II-II 2.4.2	ECO No. 11320 ECO No. 11421
11	04/06	WH05 II-II 3.5.1.1.1, 3.5.1.2.8, 5.4, 7.0 Figures WHII-II-18, WHII-II-	ECO No. 11413
12	11/06	WH02.I-II 3.2, 3.5.3.7 WH05.II-II 3.5.1.3.8 WH03.II-I 3.5.1.7, 3.5.1.16, Figures: II-I-10 II-I-12, II-I-19, II-I-22 WH03.II-I 3.5.2.5, 5.4.1 All Sections Rewrite	ECO No. 11111 ECO No. 11141 ECO No.11420 ECO No. 11444 ECO No. 11683
13	01/08	WH03.II-I 3.2, 3.5.1.7 WH05.II-II 3.2.1 Figure WH II-I-12 Figure WH II-II-5, WH II-I-35, WH II-I-18B WH03.II-1 3.5.1.5, 3.5.1.7, 3.5.1.8, 7.0 Figure WH II-I-11 WH02. I-II 3.5.1.1 WH03.II-1 2.2.23,3.2, 3.6.4.5, WH05.II-II 2.2.1, 2.2.9, 3.5.1.3.2, 7.0 Appendix B Figure WH II-II-44 WH05.II-II 3.5.1.1.13, 3.5.1.2.4	ECO No. 10966 ECO No. 11136 ECO No. 11513 ECO No.11676 ECO No. 11755 ECO No. 11759
13	06/09	WH02.I-II 2.2.3.1, 3.1, 3.5.1.1, 3.5.1.2, 3.5.1.4, 3.5.1.5, 3.5.2.3, 3.5.3.2, 3.5.3.3, 3.5.3.6, 3.5.3.7 WH03 II-I 3.1, 3.5.2.1, 3.5.3.1.1.1, 3.5.3.1.9, 3.5.3.1.10, 3.5.3.1.11 WH05 II-II 3.1, 3.2.1	ECO 12303 for new DSA changes

SUMMARY

System Design Description SDD-WH00 includes five subsystems which cover specific aspects of the Contact-Handled TRansUranic (CH TRU) and Remote-Handled TRansUranic (RH TRU) waste handling. The WH00 subsystems as a function of the CH TRU waste and RH TRU waste handling functions are:

CH TRU Waste Handling

- WH01 Contact Handled (CH) Package Handling Equipment
- WH02 CH Waste Handling Equipment
- WH04 Site-Derived Waste Handling Equipment

RH TRU Waste Handling

- WH03 RH Waste Handling Equipment
- WH05 Hot Cell Equipment

The organization of this SDD and the equipment associated with each subsystem is shown in Figures S-1 and S-2.

The CH TRU portion of the waste handling system (WH00) provides the equipment, stands, and work stations needed, within the waste handling building and underground horizon, to handle CH TRU waste containers with surface dose rates of up to 200 mrem/hr delivered by an over-the-road trailer or by rail, and places them in the underground storage facility. The system equipment can move, handle, disassemble, unload, reload, reassemble, and recycle CH shipping packages used to transport CH TRU waste material to the WIPP site. The system has the capability of reversing the process by reloading and reassembling CH shipping packages for transporting CH TRU waste off-site. The system also has the capacity to handle damaged or contaminated waste containers and place them into larger overpack waste containers which are then stored underground.

The RH TRU portion of the waste handling systems was designed to move, handle, remotely disassemble, remotely unload, and recycle RH TRU waste shipping casks containing RH TRU waste canisters with surface dose rates of up to 1,000 rem/hr and maximum heat loads of 300 thermal watts. It was designed to remotely transfer these waste canisters through shielded waste handling facilities, move them underground and place them in underground storage positions. The system has the capability of reversing the process by remotely reloading and reassembling a road cask for transporting RH TRU waste off-site.

While retrieval of waste packages is not a planned activity, specific waste containers may be recoverable depending on the length of time since emplacement, and the geotechnical conditions of the storage area at the time of recovery. Such a recovery may also require new or additional equipment, depending on the specific conditions at that time.

The system's equipment is also capable of collecting, packaging, and storing radioactive waste derived during site operations, including the recovery and cleanup of spills or leaks from waste containers.

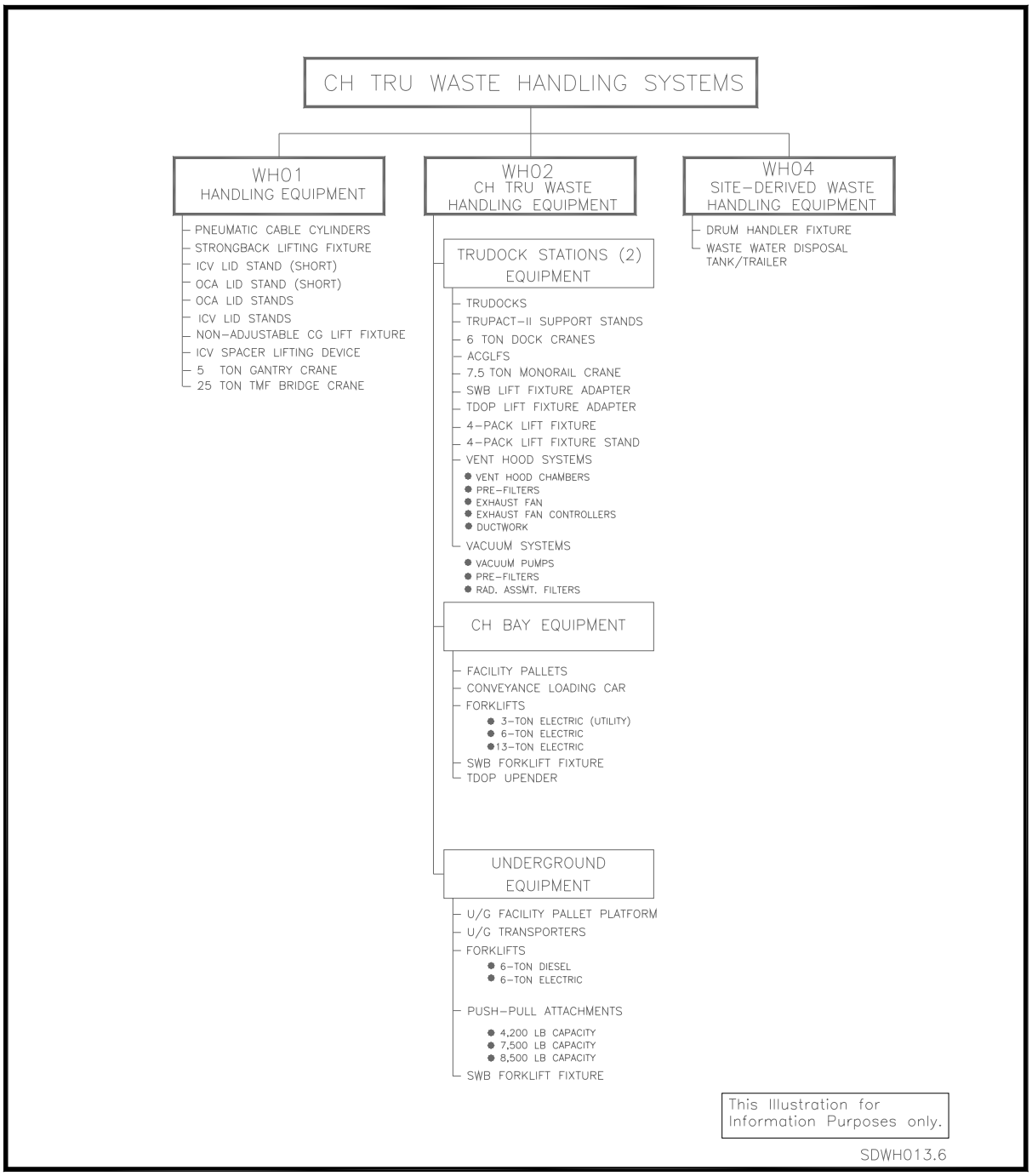

Figure S-1 – CH TRU Waste Handling Equipment

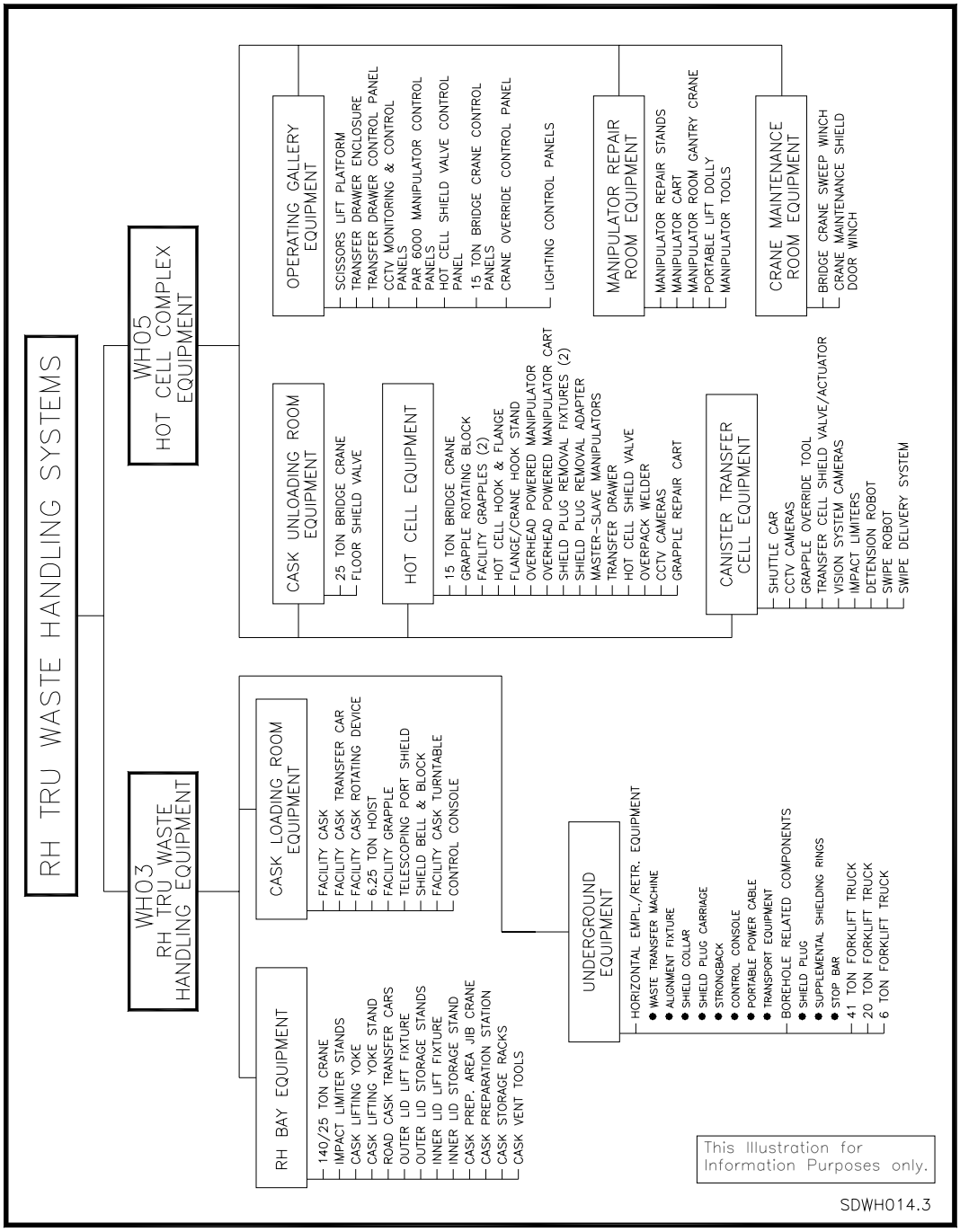

Figure S-2 – RH TRU Waste Handling Equipment

Chapter G

Table of Contents

WH00 General Functions and Requirements

1.0 PRIMARY FUNCTIONS 1
2.0 DESIGN REQUIREMENTS 1
2.1 General Design Requirements 2
2.2 System General Requirements 2
2.4 Structural Requirements 3
2.5 General Arrangements and Essential Features 5
2.6 Maintenance Requirements 5
2.7 In-Service Inspections 5
2.8 Instrumentation and Control Requirements 6
2.9 Interfacing System Requirements 7
2.9.1 Interfacing Systems 7
2.9.2 Primary System interfacing 7
2.9.3 Secondary System Interfacing 7
2.10 Quality Assurance Requirements 7
2.11 Codes and Standards 8
2.12 Reliability Assurance Requirements 9
3.0 DESIGN DESCRIPTION 9
3.1 Summary 10
3.2 Detailed System Description 10
3.3 System Performance Characteristics 11
3.4 System Arrangement 11
3.5 Component Design Descriptions 11
3.6 Instrumentation and Control 11
3.7 System Interfaces WH00 11
4.0 OPERATION 11
5.0 SYSTEM LIMITATIONS, SET POINTS, AND PRECAUTIONS 12
6.0 OFF-NORMAL EVENTS 12
7.0 MAINTENANCE 12
7.1 Maintenance Approach 12
7.2 Corrective Maintenance 14
7.3 Preventive Maintenance 14
7.4 In-Service Inspection 14

List of Figures

Figure Page

Figure G- 1 - Waste Handling Building Showing TRUDOCK Locations 16

Chapter G

WH00 General Functions and Requirements

1.0 PRIMARY FUNCTIONS

The waste handling system provides the equipment needed to handle transuranic (TRU) waste received at the WIPP site and emplace the waste underground. The radioactivity of the waste may be either low (≤200 mrem/hr surface contact) capable of being handled by contact (CH TRU) or high (>200 mrem/hr surface contact) requiring remote handling (RH TRU).

The specific functions of the waste handling system are

1.1 To receive TRU waste containers/canisters at the WIPP site in NRC-approved shipping packages, and to provide the required lifting and transporting equipment to move the shipping package from its transport vehicle into the WHB and position it for processing.

1.2 To provide the tools, unloading equipment, lifting equipment, ventilation system, and waste handling equipment, needed to unload, transport, and emplace waste containers/canisters from the WHB to the underground emplacement area(s).

1.3 To provide the tools, lifting and handling equipment, and components required to clean and maintain the shipping packages to the operational specifications required for return to the generator sites.

1.4 To provide the capability for recovering, overpacking and preparing stored wastes for shipment off-site if necessary.

1.5 To provide the equipment necessary to collect, package, and store site-derived TRU waste.

1.6 To provide shielded rooms with handling equipment, viewing equipment, accesses, and shielding needed to prepare RH TRU waste canisters for disposal underground.

1.7 To provide equipment and containers for overpacking any TRU waste containers/canisters which have external contamination which cannot be brought within acceptable limits by decontamination procedures, or which may have structural damage.

2.0 DESIGN REQUIREMENTS

The functional classification for this system or portion there of have been considered as Safety Class in the Documented Safety Analysis (DSA) and the General Plant Design Description (GPDD).

2.1 General Design Requirements

2.1.1 Wherever possible, commercially available material handling equipment, components and tools shall be utilized. The equipment shall be purchased to an equipment specification and modified as necessary to meet the specific needs of the WIPP program.

2.1.2 All large pieces of waste handling equipment that must be used underground shall be capable of being disassembled for transport through the waste shaft and reassembled underground.

2.1.3 Electrical power shall be available for use to operate any waste handling equipment. The Electrical System (SDD ED00) shall provide 480-volt, three-phase, 60-cycle and 120-volt, single-phase, 60-cycle service.

2.1.4 Compressed air shall be provided by the compressed air system (SDD CA00) with a minimum of 85 psi pressure for use with pneumatically operated equipment.

2.1.5 The waste handling system shall be designed to accept TRU waste shipping packages/casks transported by truck or rail.

2.1.6 The waste handling system shall provide facilities capable of decontamination and/or overpacking up to two percent of the waste containers/canisters received. The anticipated rate of contaminated shipments is considerably below this level.

2.1.7 Waste handling operations shall be based on the philosophy of start clean and stay clean. Work area surface contamination levels shall be maintained below the unrestricted release limits of 10 CFR Part 835 except in areas designated for processing contaminated waste containers/canisters, tools, or site-derived radioactive waste. Every effort shall be made to restrict and control the spread of contamination released as the result of an accident.

2.1.8 Only those tools and equipment approved for use and referenced in the operating procedures shall be used for tasks involving waste handling and backfill emplacement.

2.1.9 The WH00 system and its modifications shall meet the design requirements of the revision of DOE Orders 420.1 and 433.1 in effect at the time the design or design change is approved.

2.2 System General Requirements

Subsystem-specific requirements are presented in Section 2.2 of each of the subsystem chapters.

2.3 Operational Requirements

2.3.1 All waste handling technicians shall receive training on the equipment, procedures, hazards, and safety issues associated with handling waste and shall be qualified as proficient before being allowed to work on the surface or underground to conduct waste handling and waste disposal operations. Technicians in training are allowed to work under the direction of a certified waste handling technician.

2.3.2 All waste handling operations shall be performed in accordance with approved operating procedures and in an established sequence which assures the safety and protection of operating personnel, the public, and the environment.

2.3.3 The functional classification of the waste handling systems, structures, and components (SSCs) is established through safety analysis as described in DOE-STD-3009-94. The GPDD provides the definition of functional classification for the SSCs contained in this system. The preoperational checks required per Section 7.4 are adequate to ensure each piece of equipment is acceptable for use.

2.3.4 Normal operations for receipt and emplacement of seven-packs of drums containing CH TRU waste do not include removal of empty drums received as dunnage in the seven-pack. Seven-packs consisting entirely of empty drums will be dispositioned in the most cost efficient manner (returned to the generator site, scrapped, etc.).

2.3.5 All shipping records, waste manifests, and receiving records shall be reviewed for regulatory compliance. Discrepancies shall be recorded and resolved, and the shipping agency shall be notified of receipt of shipment.

2.3.6 The waste containers shall be free of external radiological contamination. However, should contamination exceed the limits specified in 10 CFR Part 835, Appendix D, two options are available. If the contamination falls within the criteria for small area "spot" decontamination (i.e., less than or equal to 100 times the limits specified in 10 CFR Part 835, Appendix D, and less than or equal to 6 ft2 [0.56 m2]), the shipping package or the waste container shall be decontaminated at the location where the contamination was found. For large area contamination the waste shall remain in the shipping container, which shall be resealed and a suitable disposition determined.

2.4 Structural Requirements

2.4.1 All overhead cranes used in waste handling operations shall be certified to lift their rated capacity, and shall be load tested and maintained in compliance with the DOE Standard, Hoisting and Rigging (DOE-STD-1090, latest revision).

2.4.2 Waste handling equipment shall be designed with minimum factors of safety of 2 on yield strength or 4 on ultimate tensile strength, whichever is less.

2.4.3 Any equipment subject to possible contamination shall be fabricated from stainless steel where possible, and be free of cracks, crevasses, and internal corners that could inhibit proper decontamination.

2.4.4 Structural carbon steel components shall be protected from atmospheric corrosion by painting or other suitable coating. Exceptions are made for lifting devices where paint may not be applied to areas that must be NDE inspected periodically.

2.4.5 The composition and design of mating parts which are made of stainless steel or other materials which are subject to galling shall be selected and designed so as to minimize the possibility of galling.

2.4.6 Structural requirements for all system WH00 equipment shall be in accordance with the General Plant Design Document (GPDD) which assigns the following design bases to all equipment for WIPP:

- Structural and Support Loading Requirements
- Special Seismic Loading Requirements
- Wind/Tornado Loading Requirements
- Principal Design and Coordination Codes and Standards

2.4.7 Selected equipment shall be designed to hold its load in place in the event of a Design Basis Earthquake (DBE). Subsystems WH02, WH03, and WH05 have equipment subject to this DBE hold-in-place requirement.

Equipment required to hold a load in place during a DBE is listed in Section 2.4 of the subsystem descriptions.

2.4.8 A Structural Integrity Program is required to inspect for damage to RH WHB structures and equipment caused by high radiation fields. The Structural Integrity Program is being implemented by an evaluation of whether the waste received and processed in the facility may be challenging the radiation exposure fields required to cause material degradation.

An initial evaluation was performed under Engineering Change Order 11611 to validate that the RH waste inventory, identified prior to first receipt, does not generate radiation fields that challenges the threshold limit for structural degradation in structural members or waste handling equipment due to radiation exposure.

The Structural Integrity Program will be maintained by periodic review and assessment of the identified inventory both received and projected to validate

that the radiation exposure does not challenge the threshold limits for structural degradation in the future.

2.4.9 Functional Classification

The Functional Classification for all system WH00 equipment shall be in accordance with the Functional Classification section of the General Plant Design Document (GPDD), and is listed in Section 2.4 of the subsystem descriptions.

2.5 General Arrangements and Essential Features

The design throughput of CH waste containers and RH waste canisters require operations in both areas. Above ground operations have separate work areas, and work can be performed independently; however, waste transfers to the underground and underground operations use common facilities and must, therefore, be closely coordinated.

2.6 Maintenance Requirements

2.6.1 Waste handling equipment and tools shall be maintained in accordance with manufacturers' recommendations.

2.6.2 Hoisting, rigging, forklifts, and lifting accessories shall be tested and maintained in accordance with DOE Standard, Hoisting, and Rigging (DOE-STD-1090, latest revision).

2.6.3 The batteries of battery powered forklift trucks and other battery powered vehicles shall be recharged at times when the vehicle is not in use.

2.6.4 Periodic maintenance schedules, calibration procedures and preventive maintenance instructions (PMI) shall be prepared for all major pieces of equipment, where applicable.

2.6.5 Routine maintenance of TRU waste shipping packages shall include, but not be limited to: disassembly, spot decontamination if necessary, and direct replacement of components.

2.7 In-Service Inspections

2.7.1 All functional lifting equipment including, cranes, grapples, lifting fixtures, forklift trucks, and forklift attachments shall be inspected and tested as specified in compliance with the DOE STANDARD, HOISTING and RIGGING (DOE-STD-1090, latest revision).

2.7.2 Controls, instrumentation, and monitoring equipment, as well as protective devices and sensors shall be periodically inspected, calibrated, and maintained.

2.7.3 Procedures shall be prepared and used to check and inspect for the presence of possible physical damage and radioactive contamination of the waste containers as well as shipping packages and casks upon receipt at and shipment from WIPP.

2.7.4 Procedures shall be prepared and used for periodic inspections of all operating equipment and areas.

2.7.5 Procedures shall be prepared and used for periodic inspections of any emergency equipment.

2.8 Instrumentation and Control Requirements

Instrumentation and control equipment including operating stations and panels shall be provided to operate WH00 functionally operating equipment. The following requirements apply to all subsystems. Specific requirements for each subsystem appear in Section 2.8 of the chapter for that subsystem.

2.8.1 A single failure shall not result in an unsafe operation.

2.8.2 Making or breaking electrical connections shall not result in the condition of inadvertent operation of any mechanical device.

2.8.3 Controls and interlocks shall be designed into the equipment to prevent unsafe operation and to protect personnel.

2.8.4 Grounding shall be used to protect personnel and minimize electrical circuit interference.

2.8.5 Wiring shall be color coded and /or marked with identifying wire numbers.

2.8.6 Fuses and/or circuit breakers shall be provided as required.

2.8.7 Control and instrumentation shall not use any supply greater than 115-volt, single-phase power.

2.8.8 Low level instrument signal wiring shall be shielded and/or separated from power and control cables to prevent electrical interferences where necessary.

2.8.9 Cable connectors, if used, shall be provided with weatherproof locking type disconnects, connectors, or clamps.

2.9 Interfacing System Requirements

2.9.1 Interfacing Systems

The interfacing systems shall be divided into primary and secondary systems as defined below:

- Primary System Interfaces

  The primary system interfaces are the functions, services, or support provided by other systems at the specific interface so that the WH00 system can satisfy the required design criteria.

- Secondary System Interfaces

  The secondary system interfaces are the functions, services, or support provided by the WH00 system at the specific interface so that the other system can satisfy the required design criteria.

2.9.2 Primary System interfacing

System WH00 is the primary system in interfaces with systems listed below.

System	Title
AU00	Underground Facilities and Equipment
CA00	Compressed Air System
CF00	Plant Building, Facilities, and Miscellaneous Equipment
CM00	Plant Monitoring and Communications
ED00	Electric System
HV00	Heating, Ventilating, and Air Conditioning System
RM00	Radiation Monitoring System
VU00	Underground Ventilation

2.9.3 Secondary System Interfacing

System WH00 has secondary interfaces with the following systems:

System	Title
FP00	Fire Protection System
PT00	Packaging and Transportation System

2.10 Quality Assurance Requirements

To assure that the required quality is achieved for all aspects and activities of the WIPP, a comprehensive quality assurance program shall be implemented and controlled in conformance with 10 CFR Part 830.120, and ASME NQA-1 as set forth in the U.S. Department of Energy Carlsbad Field Office (DOE-CBFO) Quality Assurance Program Description CBFO-94-1012 (QAPD).

Design specifications, equipment specifications, technical specifications, and drawings for the system, its components and equipment, structures, and services related thereto shall contain quality assurance (QA) program requirements appropriate to the item or scope of work being defined or specified. These specifications shall also define quality assurance practices such as inspections, examinations, and tests appropriate to the specified item or service.

The Quality Assurance program for the procurement, use, maintenance and repair of offsite shipping containers shall be equivalent to 10 CFR Part 71, Subpart H, as set forth in DOE Order 460.1 and 460.2A, as applicable.

A graded approach for application of QA requirements shall be used. Application of the requirements of the DOE/CBFO QAPD shall be determined in a manner consistent with the relative risk and functional importance of the item or service involved, as represented by the Functional Classification or mode compliance designation of the equipment.

2.11 Codes and Standards

Listed below are the codes, standards, regulatory requirements, DOE Orders, etc., to be applied to the system design, construction and operation of the waste handling system.

- 10 CFR Part 830 Subpart A, "Quality Assurance Requirements"
- 10 CFR Part 835, "Occupational Radiation Protection"
- 29 CFR Part 1910, "Occupational Safety and Health Standards"
- 29 CFR Part 1926, "Safety and Health Regulations for Construction"
- 40 CFR Parts 260-299, "Resource Conservation Recovery Act (RCRA)"
- 49 CFR, *Transportation*
- DOE Order 420.1B, *Facility Safety*
- DOE Order 430.1B, *Real Property Asset Management*
- DOE Order 433.1, *Maintenance Management Program for DOE Nuclear Facilities*
- DOE Order 440.1A, *Worker Protection Management for DOE Federal and Contractor Employees*, Section 4.4.1 and 4.4.3

- DOE-STD-1090, DOE Standard, *Hoisting and Rigging*
- ASME NQA-1, Quality Assurance Requirements for Nuclear Facilities
- DOE/WIPP-069, Waste Acceptance Criteria for WIPP
- DOE/CBFO-94-1012, Quality Assurance Program Document
- Safety Analysis Report for the TRUPACT-II Shipping Package (SARP), NRC Docket Number 71-9218
- Safety Analysis Report for the RH TRU (72B) Waste Shipping Package (SARP), NRC Docket Number 71-9212
- Safety Analysis Report for the 10-160B Shipping Package (SARP), NRC Docket No. 71-9204
- DOE/WIPP 91-005, Resource Conservation and Recovery Act Part B Permit Application
- DOE/WIPP-07-3372, *Waste Isolation Pilot Plant Documented Safety Analysis*
- DOE/WIPP-07-3373, *Waste Isolation Pilot Plant Technical Safety Requirements*

2.12 Reliability Assurance Requirements

All components of the waste handling system, with appropriate maintenance, shall have a design life of 25 years.

On a loss of power, all WHB cranes shall fail safe by locking in their current position.

Specific reliability assurance requirements other than those specified here for each WH00 subsystem appear in Section 2.12 of the subsystem chapters.

3.0 DESIGN DESCRIPTION

This section provides a detailed description of the waste handling system components, arrangements, performance characteristics, instrumentation and control, and system interfaces for satisfying the system WH00 functional and design requirements.

3.1 Summary

The CH TRU and RH TRU waste handling systems provide the equipment to handle and emplace for disposal underground, as well as recover transuranic (TRU) waste containers or canisters received in shipping packages from various government sites.

The waste containers/canisters are expected to be free of external radiological contamination. However, should the magnitude of contamination exceed the limits specified in 10 CFR Part 835, Appendix D, two options are covered by the WH00 system. If the contamination falls within the criteria for small area "spot" decontamination (i.e., less than or equal to 100 times the limits specified in 10 CFR Part 835, Appendix D and less than or equal to 6 ft2 [0.56 m2]), the shipping package or the waste container will be decontaminated at the location where the contamination was found. For large area contamination the waste will be left in the shipping package and the shipping container will be resealed. The shipping site will be given the following options for disposition: the shipping package may be returned to the shipper, sent to another DOE site, or sent to a third party contractor.

The waste handling system includes provision for collecting, handling, and packaging site-derived radwaste into containers for subsequent transfer and emplacement in the underground. Site-derived TRU or TRU mixed waste containers must also comply with the requirements of 10 CFR Part 835, Appendix D.

3.2 Detailed System Description

The waste handling system consists of the following equipment as a function of CH TRU and RH TRU waste handling functions:

CH TRU Waste Handling

- WH01 Contact-Handled (CH) Package Handling Equipment
- WH02 CH TRU Waste Handling Equipment
- WH04 Site-derived Waste Handling Equipment

RH TRU Waste Handling

- WH03 RH TRU Waste Handling Equipment
- WH05 Hot Cell Complex Equipment

Subsystem-specific design descriptions are presented in Section 3.2 of each of the subsystem chapters.

3.3 System Performance Characteristics

Subsystem-specific performance characteristics are presented in Section 3.3 of each of the subsystem chapters.

3.4 System Arrangement

All incoming and outgoing waste package shipments to and from the WIPP site are handled in an area located at the south side of the WHB. All waste processing and handling operations on the surface are performed in the WHB. Figure G-1 shows the surface waste handling system arrangement for the WHB.

The CH TRU waste is received and handled in the CH Bay and the RH TRU waste in the RH Bay of the WHB unit. Both waste handling processes feed into the waste shaft conveyance to move the waste containers and canisters to the underground for emplacement and disposal.

3.5 Component Design Descriptions

Subsystem-specific component design descriptions are presented in Section 3.5 of each of the subsystem chapters.

3.6 Instrumentation and Control

Subsystem-specific instrumentation and control information is presented in Section 3.6 of each of the subsystem chapters.

3.7 System Interfaces WH00

Subsystem-specific primary and secondary interfaces are presented in Section 3.7 of each of the subsystem chapters.

4.0 OPERATION

Waste handling site operation involves the receipt, handling, and emplacement of CH TRU waste containers, backfill containers and RH TRU waste canisters at the WIPP site. The equipment and facilities of subsystems WH01, WH02, and WH04 for CH TRU waste handling and WH03 and WH05 for RH TRU waste handling are utilized to support this activity. The site operation requires the integration of equipment from various subsystems. WIPP site operation procedures which are controlled documents govern all CH TRU and RH TRU waste handling operations. The principal operational sequences addressed by these procedures are identified in Section 4.0 of Part I, Chapter II for CH TRU operations and in Section 4.0 of Part II, Chapter I, for RH TRU operations.

5.0 SYSTEM LIMITATIONS, SET POINTS, AND PRECAUTIONS

The operating limits, set points, alarms, interlocks, and precautions as related to operation of the waste handling system are for process specific Technical Safety Requirements (TSRs), general personnel safety, equipment safety and performance, and overall system performance. The information reiterates the limits, set points, and precautions imposed either implicitly or explicitly by the system operations described in Sections 4.0, 6.0, and 7.0.

Subsystem-specific limitations, set points, and precautions are presented in Section 5.0 of each of the subsystem chapters.

6.0 OFF-NORMAL EVENTS

Normal processing of CH TRU waste containers and RH TRU waste canisters through the WHB to underground disposal assumes that all interfacing systems are operational and all required services are available. Only the following events are considered to be off-normal events:

- Loss of WHB and underground ventilation (differential pressures)
- Radioactive particulate release
- Loss of electrical power
- Loss of pneumatics (compressed air) (except WH04)
- Fire
- Design Basis Seismic/Tornado (except WH01 and WH04)

7.0 MAINTENANCE

This section is devoted to those features of the waste handling system that enable and enhance maintenance of the system. Guidelines are provided for performing maintenance, and in-service inspection.

In accordance with DOE 4330.4B requirements, the maintenance program "....shall contain provisions sufficient to preserve, predict, or restore the availability, operability, and reliability of plant structures, systems, and components important to safe and reliable operation of the ....facility." This is the guiding requirement and basis for the following material.

All waste handling equipment maintenance activities must be performed in accordance and consistent with the WIPP site safety manual requirements.

7.1 Maintenance Approach

The graded approach to maintenance should be utilized and should consider the following order of precedence:

- In general, all maintenance on the Waste Handling equipment is performed using "contact maintenance" techniques. No radiation levels of a magnitude that would require remote maintenance procedures are expected to be incurred. However, before performing such maintenance actions, a radiological evaluation shall be conducted.

- Perform maintenance activities with no significant reduction of operating efficiency. The following order of precedence applies:

    1. Repair, service, and adjust in place. This approach provides for maintenance without shutdown of the system or component.

    2. Utilizing redundant equipment, when available, remove the defective unit from service, repair, service, and adjust in place.

    3. Replace the component with a spare unit. This maintenance approach will require the utilization of redundant components and systems such that one of the redundant units or systems may be isolated and removed from service and replaced with a spare unit without interrupting the operation of the system. The defective unit would then be repaired and placed in spare for the next replacement.

- Shut down the system for maintenance activities only for those few components that are not expected to require the type of maintenance that normally would necessitate shutdown of the system. Repair, service, and adjust the defective component in place, if possible, or replace the unit with a spare unit depending upon time constraints.

Regardless of what maintenance is performed upon a component, proper alignment, rotation, liquid level, cleanliness, clearances, performance, other checks and tests should be made and verified to assure the component is restored to service in acceptable condition. If parts have been replaced or repaired during maintenance, the component or system should undergo nondestructive and functional tests to verify the component or system meets its performance and operability requirements. After maintenance, restore the components and system to the design operating condition that existed prior to the start of maintenance.

The sections of maintenance and in-service inspection which follow require certain frequencies for performing the required operations. Where it can be justified by maintenance records, trending, and other records required by a graded approach to the Conduct of Maintenance, the frequencies for performing maintenance and in-service inspection may be adjusted. Based upon these justifications, the operations required may be conducted either more or less frequently than specified by the equipment manufacturer. However, where these designated frequencies are specified in a National

Code, government regulations, or DOE Orders, the frequency of conducting the required operation shall not be decreased.

Certain test and calibration equipment requires trained and certified maintenance personnel that are thoroughly familiar with the test equipment and the equipment it is to be used on. Hoisting and rigging equipment must comply with the requirements of a number of state and federal agencies. These requirements are integrated into the DOE Standard, Hoisting and Rigging (DOE-STD-1090, latest revision). This manual governs the requirements for surface and underground hoisting and rigging equipment, forklifts, and personnel qualifications.

7.2 Corrective Maintenance

Corrective maintenance is performed upon a component or a system found to be defective during inspections or preoperational checks, to restore the component or system to a condition suitable to perform its required functions in a reliable manner. The following discussions describe the corrective maintenance requirements for the components of the waste handling system.

Much of the waste handling equipment is constructed of fabricated structural steel that is painted. All painted surfaces should be periodically inspected for signs of paint chipping, peeling, cracking, etc., and to locate areas where paint has been removed by accidental contact. Areas where paint has been removed should be properly prepared and repainted. Areas where normal wear will repeatedly remove the paint should be periodically inspected for signs of corrosion. It is expected that unprotected carbon steel will not experience significant corrosion, even in the underground facilities. However, if corrosion protection is applied, such as a light coating of oil, care should be taken so that dirt and salt dust does not accumulate on the oil coating.

7.3 Preventive Maintenance

Preventive maintenance consists of performing those actions and services necessary to keep components working without breakdown. Preventive maintenance is generally scheduled to be performed at specific time intervals. It is not performed on equipment that can be more economically replaced rather than serviced. Most of the waste handling equipment and tools are standard commercial items which are furnished with an operations and maintenance manual. These manuals specify the required periodic maintenance and the recommended time intervals. All preventative maintenance (including records) will comply with the requirement of the DOE Standard, Hoisting and Rigging (DOE-STD-1090, latest revision).

7.4 In-Service Inspection

Every operational piece of waste handling equipment should be subject to a preoperational check at the start of each work shift. Any defects found should

be recorded and action taken to correct or repair the defective item. Some equipment requires specific in-service examinations that are of more significance than a general observational checkout.

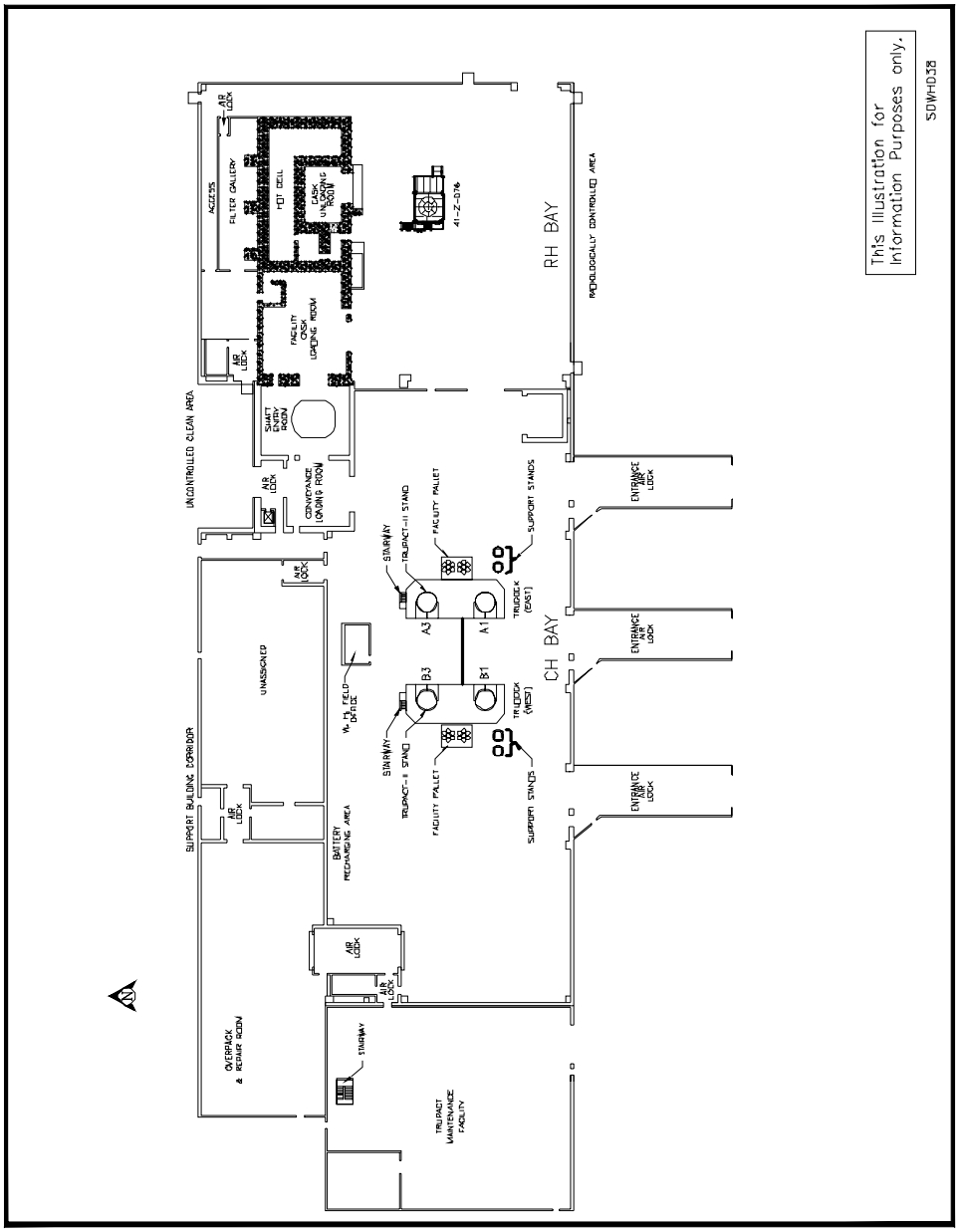

Figure G-1 – Waste Handling Building Plan Showing TRUDOCK Locations

Part I, Chapter I
Table of Contents

Subsystem WH01, Contact-Handled Package Processing Equipment
Requirements, Design, and Operation

1.0 PRIMARY FUNCTIONS 1
2.0 DESIGN REQUIREMENTS 1
2.1 General Design Requirements 1
2.2 System General Requirements 1
2.2.1 WH01 General Requirements 1
2.2.3 WH01 Underground Requirements 2
2.3 Operational Requirements 2
2.4 Structural Requirements 2
2.4.1 Functional Classification 2
2.5 General Arrangements and Essential Features 3
2.6 Maintenance Requirements 3
2.7 In-Service Inspections 3
2.8 Instrumentation and Control Requirements 3
2.9 Interfacing System Requirements 3
2.10 Quality Assurance Requirements 3
2.11 Codes and Standards 3
2.12 Reliability Assurance Requirements 3
3.0 DESIGN DESCRIPTION 4
3.1 Summary 4
3.2 Detailed System Description 4
3.3 System Performance Characteristics 5
3.4 System Arrangement 5
3.5 Component Design Descriptions 5
3.5.1 Contact Handled Shipping Packages 5
3.5.2 Trailer Jockey 7
3.5.3 Mobile Loading Unit 8
3.5.4 TRUPACT Work Platform 8
3.5.5 ICV Spacer Lifting Device 8
3.5.6 Nonadjustable Center of Gravity Lift Fixture 8
3.5.7 OCA Lid Stands 9
3.5.8 ICV Lid Stands 9
3.5.9 Strongback Lifting Fixture 9
3.5.10 OCA Lid Stand (short) 9
3.5.11 ICV Lid Stand (short) 10
3.5.12 7.5-Ton Capacity OP&RR Monorail Crane 10
3.6 Instrumentation and Control 10
3.6.1 7.5-Ton OP&RR Monorail Crane 10
3.6.2 25-Ton TRUPACT Maintenance Facility (TMF) Monorail Crane 10
3.7 System Interfaces WH01 10
3.7.1 Primary Interfaces 10
3.7.2 Secondary Interfaces 11

4.0 OPERATION 11
5.0 SYSTEM LIMITATIONS, SET POINTS, AND PRECAUTIONS 11
5.1 Radiation Limits 12
5.2 Operating Limits 12
5.3 Set Points and Alarms 12
5.4 Interlocks 12
5.5 Precautions 12
6.0 OFF-NORMAL EVENTS 12
7.0 MAINTENANCE 13

List of Figures

Figure WH I-I-1 - TRUPACT-II General 14
Figure WH I-I-2 - HalfPACT General Arrangement 15
Figure WH I-I-3 - TRUPACT-III General Arrangement 16
Figure WH I-I-4 - ICV Seal Test Port 17
Figure WH I-I-5 - OCV Seal Test Port and Vent Port 18
Figure WH I-I-6 - ICV Vent Port 19
Figure WH I-I-7 - TRUPACT-II Lock Ring Assembly 20
Figure WH I-I-8 - ICV Spacer Lifting Device 21
Figure WH I-I-9 - Non-Adjustable Center of Gravity Lift Fixture 22
Figure WH I-I-10 - Strongback Lifting Fixture 23
Figure WH I-I-11 - OCA Lid (Short) Support Stand 24
Figure WH I-I-12 - ICV Lid (Short) Support Stand 25

Part I, Chapter I

Subsystem WH01, CH Packaging Handling Equipment Requirements
Design and Operation

1.0 PRIMARY FUNCTIONS

Refer to Chapter G for the general primary functions.

2.0 DESIGN REQUIREMENTS

2.1 General Design Requirements

Refer to Chapter G for the general design requirements.

2.2 System General Requirements

2.2.1 WH01 General Requirements

Refer to Chapter G for the general requirements.

2.2.1.1 Only NRC Type B certified shipping package shall be used to transport CH TRU waste containers to WIPP. CH shipping packages will arrive by over-the-road trailers. The TRUPACT-II and HalfPACT are the currently approved shipping packages; their payloads may be seven-packs of 55-gallon drums, SWBs, TDOPs, four-packs of 85-gallon drums, or three-packs of 100-gallon drums. The total TRUPACT-II payload weight shall not exceed 7,265 pounds (lb), and the maximum gross weight shall not exceed 19,250 lb. The total HalfPACT payload weight shall not exceed 7,600 pounds (lb), and the maximum gross weight shall not exceed 18,100 lb.

2.2.1.2 Any CH Package found to have radioactive contamination above the limits of 10 CFR Part 835, Appendix D shall be handled in the following ways: it shall be decontaminated locally, returned to a DOE generator site, sent to a third party contractor.

2.2.1.3 Empty CH Packaging shall be examined for serviceability before being released from WIPP for reuse. Any minor maintenance, cleaning, or replacement of component parts shall be done in the WHB or TRUPACT-II Maintenance Facility.

2.2.1.4 An Inner Containment Vessel (ICV) spacer removal device shall be provided for removing the honeycomb dunnage from the bottom of the ICV of the TRUPACT-II or HalfPACT.

2.2.2 WH01 Surface Requirements

2.2.2.1 Trailer jockeys (operated by waste handling technicians) shall be provided to move the CH packaging trailers within the yard area of the WIPP site.

2.2.2.2 Only clean and dry CH packaging shall be taken into the CH Bay of the WHB. Cleaning and drying, if needed, shall be done in the receiving airlocks or in the area south of the WHB.

2.2.2.3 A hoist with a minimum capacity of 7.5 tons shall be provided in Room 108 to facilitate TRUPACT-II handling activities.

2.2.2.4 Special lifting fixtures with an adjustable center of gravity feature, the adjustable center of gravity lift fixtures (ACGLF), shall be provided to remove the containers from the Contact-Handled Package with a balanced vertical lift using an overhead crane with a minimum capacity of 6-tons.

2.2.2.5 Support stands shall be provided to support the OCA lids and the ICV lids of the TRUPACT-IIs and HalfPACTs in the CH Receiving Bay and the Overpack Cover and Closure Lid of the TRUPACT-IIIs in Room 108.

2.2.2.6 A 25-ton overhead bridge crane located in the TRUPACT Maintenance Facility (TMF) is included in subsystem WH01.

2.2.3 WH01 Underground Requirements

None

2.3 Operational Requirements

All empty CH Packaging which will be shipped off-site shall be certified for "free release," or meet the requirements of DOT for transportation of empty Type B shipping packages. All CH Packaging containing radioactive waste that are to be shipped off-site must meet both requirements of DOT for Type B shipping packages and the NRC certificate of compliance.

Refer to Chapter G for the general operational requirements.

2.4 Structural Requirements

There is not equipment in WH01 whose design is affect by the Design Basis Earthquake.

2.4.1 Functional Classification

The functional classification for the SSCs identified in this system shall be performed and documented in accordance with WP 09-CN3023, Functional Classification procedure and the functional classification section of the

General Plant Design Description (GPDD). The process for establishing functional classification is contained in the DSA. Documentation of the Functional Classification analysis shall be in accordance with WIPP Configuration Management procedures.

The equipment in WH01 is functionally classified as Balance of Plant.

2.5 General Arrangements and Essential Features

Refer to Chapter G for general arrangements and essential features.

2.6 Maintenance Requirements

Refer to Chapter G for the general maintenance requirements

2.7 In-Service Inspections

Refer to Chapter G for the general in-service inspections.

2.8 Instrumentation and Control Requirements

Instrumentation and control equipment including operating stations and panels shall be provided to operate WH01 equipment. Specific requirements for Subsystem WH01 are:

2.8.1 Operator controls and indicators shall be provided to operate the 7.5-ton monorail crane. (Out of Service)

2.9 Interfacing System Requirements

Refer to Chapter G for the primary and secondary interfacing requirements.

2.10 Quality Assurance Requirements

Refer to Chapter G for the program quality assurance requirements.

2.11 Codes and Standards

Refer to Chapter G for the codes and standards.

2.12 Reliability Assurance Requirements

Refer to Chapter G (General Requirements) and Chapter II (WH02) for the Reliability Assurance Requirement that apply to Subsystem WH01.

3.0 DESIGN DESCRIPTION

This section provides a detailed description of the CH Packaging Handling Equipment (Subsystem WH01) components, arrangements, performance characteristics, instrumentation and control, and system interfaces.

3.1 Summary

The WH01 subsystem, CH Packaging Handling Equipment, provides the equipment to receive, handle, inspect, and return CH TRU shipping packages received at WIPP.

3.2 Detailed System Description

Subsystem WH01 provides tools and equipment to perform the following functions for receiving and returning shipping packages from and to the waste generating site:

- Move the shipping trailers in the yard area.
- Provide the equipment for removal of the lids, waste containers, and to reinstall the lids for return to generator sites.
- Provide support stands for ICV and OCA lids, Overpack cover, and Closure lid removed during the unloading operations.
- Provide Mobile Loading Units to facilitate CH TRU waste loading activities associated with the TRUPACT-II and HalfPACT (trailers provided by PT00).

CH TRU waste is shipped to WIPP site in type B shipping packages. The transportation shipping trailers can be loaded with up to three packages. One TRUPACT-III may be loaded onto the TRUPACT-III trailer.

The trailer jockeys are used to engage and move the shipping trailers with the TRUPACT shipping packages. After the packages are unloaded and taken into the WHB, the shipping trailer may be moved to a parking location. It is held there until it is released.

Routine maintenance of the CH Packaging may be performed in a TRUDOCK, inside the CH Bay, Room 108, or in another area, depending on the workload and schedule at the time. If the work is performed in or adjacent to the TRUDOCK or Room 108, the overhead cranes are used to handle the packaging components. If the work is done elsewhere, suitable lifting equipment will be used. An ICV spacer removal device is used to remove and install the ICV lower spacer.

An overhead 7.5-ton monorail crane is available in Room 108. (Currently out of service)

Mobile Loading Units are provided to allow generator/storage sites to load-unload TRUPACT-II/HalfPACT payload containers when loading docks are not available. Each MLU provides the tools, lift fixtures, platforms, leak detectors, and ladders to safely handle the payload containers.

3.3 System Performance Characteristics

None

3.4 System Arrangement

Refer to Section 3.4 of Part I, Chapter II, for the related CH TRU area system arrangement.

3.5 Component Design Descriptions

3.5.1 Contact Handled Shipping Packages

A detailed description of the CH shipping packages and related transportation equipment is included in Safety Analysis Report for the respective CH Shipping Package (SARP). Because of the interfaces between WH00 and the CH shipping packages, a brief description of the important features are provided below.

A TRUPACT-II shipping package consists of an inner containment vessel (ICV) and an outer containment assembly (OCA). The ICV provides the primary containment boundary for the payload (seven-packs of 55 gallon drums, SWBs, or a TDOP), and the OCA provides the secondary containment. The gross weight of an empty TRUPACT-II is approximately 12,800 lb.

The OCA consists of a lower body assembly and a lid, with a stepped joint and a breech-type locking ring. Two O-rings are mounted in a vertical extension of the body to form the pressure seal of the OCA. The design permits the internal locking ring to be rotated from the outside, and provides access ports to vent and test the assembly. See Figures WH I-I-4 and WH I-I-6. The OCA lid has three lifting pockets on the top of the lid for lifting with an ACGLF. The lid weighs approximately 3,600 lb. The base of the TRUPACT-II has two forklift pockets which can be accessed from either side. The pockets have end covers which are installed when transporting the TRUPACT-IIs. There are four tie-down lugs at the base of the body to secure the TRUPACT-II to its transportation trailer.

The ICV is a stainless steel pressure vessel which contains the payload. The ICV has a lid and a lower body which has mating flanges that form a stepped

joint and seal when assembled. A locking mechanism similar in design and function to that used on the OCA is provided to secure ICV lid to the body. Two O-rings are used to provide the pressure seal between the mating flanges of the ICV lid and body. Access ports are used when venting and testing the vessel. See Figure WH I-I-5. There are three lifting pockets in the ICV lid for lifting the lid alone, or the entire ICV vessel, with an ACGLF. Each lifting pocket has a load capacity of 2,500 lb. The ICV lid weighs approximately 900 lb, and an empty assembled ICV weighs a nominal 2,625 lb.

A shipping pallet is used under payloads of seven-packs of 55-gallon drums. The drum pallet has three lifting pockets of the same design and spacing as the OCA and ICV lids. There are three guide tubes that pass through the seven-packs and align with the lifting pockets to guide the (long) lifting legs of the ACGLF when removing the waste packages. The combined weight of the pallet and guide tubes is about 300 lb. See Figure WH I-I-1 for details.

A HalfPACT shipping package consists of an inner containment vessel (ICV) and an outer containment assembly (OCA). The ICV provides the primary containment boundary for the payload (seven-packs of 55-gallon drums, SWBs, or a TDOP), and the OCA provides the secondary containment. The gross weight of an empty HalfPACT is approximately 10,500 lb.

The OCA consists of a lower body assembly and a lid, with a stepped joint and a breech-type locking ring. Two O-rings are mounted in a vertical extension of the body to form the pressure seal of the OCA. The design permits the internal locking ring to be rotated from the outside, and provides access ports to vent and test the assembly. The OCA lid has three lifting pockets on the top of the lid for lifting with an ACGLF. The lid weighs approximately 3,600 lb. The base of the HalfPACT has two forklift pockets which can be accessed from either side. The pockets have end covers which are installed when transporting the HalfPACTs. There are four tie-down lugs at the base of the body to secure the HalfPACT to its transportation trailer.

The ICV is a stainless steel pressure vessel which contains the payload. The ICV has a lid and a lower body which has mating flanges that form a stepped joint and seal when assembled. A locking mechanism similar in design and function to that used on the OCA is provided to secure ICV lid to the body. Two O-rings are used to provide the pressure seal between the mating flanges of the ICV lid and body. Access ports are used when venting and testing the vessel. There are three lifting pockets in the ICV lid for lifting the lid alone, or the entire ICV vessel, with an ACGLF. Each lifting pocket has a load capacity of 2,500 lb. The ICV lid weighs approximately 900 lb, and an empty assembled ICV weighs a nominal 2,250 lb.

A shipping pallet is used under payloads of seven-packs of 55-gallon drums. The drum pallet has three lifting pockets of the same design and spacing as the OCA and ICV lids. There are three guide tubes that pass through the

seven-packs and align with the lifting pockets to guide the (long) lifting legs of the ACGLF when removing the waste packages. The combined weight of the pallet and guide tubes is about 300 lb. See Figure WH I-I-2 for details.

A TRUPACT-III shipping package is comprised of a body, a bolted, flat closure lid, and an energy absorbing overpack cover that protects the closure lid. The packaging assembly also includes integral overpack structures that protect the containment boundary from the hypothetical accident conditions of transport (HAC) defined in 10 CFR §71.73. See Figure WH I-I-3 for details.

A TRUPACT-III shipping package consists of a sandwiched stainless steel and impact absorbing materials structure. The side, top, and bottom walls are comprised of an inner stainless steel containment sheet, an outer structural stainless steel sheet (joined to the containment sheet by V-shaped, stainless steel stiffeners), a layer of phenolic foam, a puncture-resistant stainless steel sheet, a layer of balsa wood, and an external stainless steel sheet. The end wall is similarly constructed except for wood corner extensions encased in 8-mm stainless making a deep octagonal recess in the end. On the closure end, a stainless steel bolting and sealing flange is utilized for securing the closure lid via M36 x 205mm socket head cap screws. The body has a nominal weight of 43,900 lb.

The Closure Lid (CL) for the TRUPACT-III packaging consists of a sandwiched stainless steel structure that is similar to the body. The CL is attached to the body via M36 x 205mm socket head cap screws. Lifting of the CL is performed using hardware suitable for threading into M36 threaded bosses installed on the top surface. Two other M36 threaded holes are located below the horizontal centerline and in line with the other holes. These holes are utilized for assistance in the unlikely event of a stuck CL. The CL has a nominal weight of 4000 lb.

The Overpack Cover (OC) of the TRUPACT-III packaging consists of a rectangular stainless steel sheet structure encasing impact-absorbing and thermal insulation materials structure. Similar to the body end, the central area of the OC consists of a deep octagonal recess. Lifting of the OC is performed using hardware suitable for threading into M36 threaded bosses installed on the top surface. The OC has a nominal weight of 5,520 lb.

TRUPACT-III waste handling equipment details will be added as design details are finalized.

3.5.2 Trailer Jockey

A diesel powered trailer jockey is provided to move the transportation trailers within the controlled area. The unit is a standard commercial vehicle which is not intended for highway use. It has a hydraulically operated fifth wheel boom, and a usable trailer tongue-weight capacity of 25,000 lb (30,000 lb rear-axle load capacity less the 5,000-lb empty weight on the rear axle).

3.5.3 Mobile Loading Unit

The MLU is transported on a flatbed gooseneck trailer that is 8-1/2 feet wide and 40 feet long (PT00). Each MLU is designed to be pulled by a conventional fifth wheel tractor and is equipped with tie-downs. The MLU contains a control enclosure, two (2) rolling ladders, two (2) TRUPACT work platforms, and an Adjustable Center of Gravity Lifting Fixture (ACGLF). The control enclosure contains required controllers for the ACGLF, leak test equipment, a transformer, a control enclosure breaker panel, and an air conditioning unit.

3.5.4 TRUPACT Work Platform

The TRUPACT Work Platform consists of two similar sections which can be placed around a TRUPACT-II and bolted together to provide access to the TRUPACT-II O-rings and to conduct leak tests on repaired units. The platform is mounted on casters for ease of movement, and has an elevated work deck with a perimeter guardrail. Access to the deck is via short ladder, which is equipped with a latchable gate to complete the perimeter guarding.

3.5.5 ICV Spacer Lifting Device

The ICV spacer lifting device has three hooks which are used to connect the lifting device to the ICV Lower Spacer inside the TRUPACT-II. One of these tools can be used to remove and install the ICV Lower Spacer by removing the six screws which hold the spacer in the TRUPACT-II and attaching the lifting hooks to the lower spacer. Then a crane hook is connected to the device and both items are lifted out of the ICV body. See Figure WH I-I-8.

3.5.6 Nonadjustable Center of Gravity Lift Fixture

There is one nonadjustable center of gravity lift fixture (41-T-167). This fixture is similar to the ACGLFs in function except it has no capability for balancing the load. It can be used as a backup for the ACGLFs, if the ACGLFs are not available, to lift the TRUPACT-II OCV and ICV lids and empty ICV. The fixture has a lift capacity of 10,000 lb and a weight of 600 lb.

The nonadjustable center of gravity lift fixture consists of three radial beams with a central lifting shackle mounted in a swivel bearing and two sets (short and long lengths) of three lifting legs. See Figure WH I-I-9, WH01. After being placed in position, the lifting legs are rotated 90 degrees by electrical linear actuators attached to the under side of the lift fixture so that a lifting lug can engage a mating lift pocket on the TRUPACT-II components. The electrical actuators are operated from a pendant control station.

3.5.7 OCA Lid Stands

The OCA Lid Stands are placed near each TRUDOCK work station to support the OCA lid when it is removed from the TRUPACT-II.

Each stand consist of four structural steel legs with base plates and a ring made of 3-in. pipe that is welded to the top of the four support legs. The ring has a 51-in. inner diameter and is supported by the legs at a height of 93 in. above the floor. The top surface of the ring that contacts the OCA lid is covered with 3/8-in.-thick neoprene rubber to protect the inner lay-down surface of the OCA lid from being scratched or damaged.

3.5.8 ICV Lid Stands

The ICV Lid Stands are placed near each TRUDOCK work station to support the ICV lid when it is removed from the TRUPACT-II.

Each stand consist of four structural steel legs with base plates and a ring formed from 2.5 in. by 2 in. by 0.25 in. steel angle iron welded to the top of the four support legs. The ring has a 51-in. inner diameter and is supported by the legs at a height of 80 in. above the floor. The top surface of the ring is covered with 3/8-in. thick neoprene rubber similar to the OCA lid stands.

3.5.9 Strongback Lifting Fixture

There is one strongback lifting fixture with a lift capability of 5 tons. It is used for removing and replacing the TRUPACT-II OCA and ICV lids and payload. The strongback lifting fixture is a triangular plate with lift leg support collars (pivot tubes) at the three corners. The removable lift legs (J-hook assemblies) are inserted and pinned to an extension of the hand lever assemblies. The bottom of the legs have special fittings that, when rotated, can engage the lift pocket pin in the lids or seven pack pallet. A hand lever assembly on one leg support collar that is connected to the other two leg support collars by tie rod linkages is used to rotate the legs. Figure WH I-I-10 shows the strongback lifting fixture configuration.

3.5.10 OCA Lid Stand (short)

An outer containment assembly (OCA) lid short stand is provided to support the OCA lid after it is removed from the TRUPACT-II. The stand is portable (has four caster type wheels). The OCA lid short stand consists of four 3-in. tubular steel legs with 6-in.-square base plates and a ring made of 3-in. steel pipe. The legs, equally spaced around the ring, are welded to the ring. The ring has a 51-in. internal diameter with the top surface supported 30 in. above the floor. The upper surface of the ring which contacts the OCA lid is covered with 3/8-in.-thick neoprene rubber to protect the inner lay-down surface of the OCA lid from being scratched or damaged. Figure WH I-I-11 shows the stand configuration.

3.5.11 ICV Lid Stand (short)

There is one inner containment vessel (ICV) lid short stand to support the ICV lid. The stand is portable with wheels similar to the OCA short lid stand except that the stand is smaller. The ICV lid short stand consists of four 2-in. tubular steel legs with 5-in.-square base plates and a ring made of 2.5-in. by 2-in. by 0.25-in. steel angle iron welded to the top of the four support legs. The ring has a 51-in. internal diameter and is supported 19 in. above the floor. The upper surface of the ring which contacts the ICV lid is covered with 3/8-in.-thick neoprene rubber similar to the OCA lid stand.
See Figure WH I-I-12.

3.5.12 7.5-Ton Capacity OP&RR Monorail Crane

A 7.5-ton capacity monorail crane is located in Room 108. The trolley is mounted on a straight I-beam which is suspended from the ceiling. The crane is powered by a 12-HP, 1,800-RPM motor, and operated by a hand-held pendant control.

3.6 Instrumentation and Control

This section describes the Instrumentation and Control (I&C) and control interlocks associated with subsystem WH01.

3.6.1 7.5-Ton OP&RR Monorail Crane

The only I&C associated with the 7.5-ton OP&RR monorail crane are the normal crane controls.

3.6.2 25-Ton TRUPACT Maintenance Facility (TMF) Monorail Crane

The only I&C associated with the 25-ton TMF bridge crane are the normal controls and the load cell.

3.7 System Interfaces WH01

Listed is a summary of the primary and secondary requirements for the WH01 subsystem.

3.7.1 Primary Interfaces

3.7.1.1 ED00

Provide electrical power to run the following equipment:

- 7-1/2-ton monorail crane
- 25-ton TMF Bridge Crane

3.7.1.2 CF00

Provide space for the:

- Entry airlocks
- Room 108
- TRUPACT Maintenance Facility
- Crane supports for 7.5-ton monorail crane in Room 108
- Crane supports for the 25-ton bridge crane in the TMF

3.7.1.3 PT00

Provide Leak Check Tools for subsystem WH01.

- Provide ICV and OCV Vent Plug Removal, Seal Leak Check, and Closures tools for contact-handled packages

3.7.2 Secondary Interfaces

3.7.2.1 Packaging and Transportation System (PT00)

System WH01 provides trailer jockeys and hand tools to support loading, unloading, and maintenance of the contact-handled packages

4.0 OPERATION

CH TRU waste handling operations involve the receipt, handling, and emplacement of CH TRU waste containers and backfill containers at the WIPP site. The equipment and facilities of Subsystems WH01, WH02, and WH04 are utilized in an integrated manner to support these activities. The description of the integrated operation is found in Section 4.0 of Part I-II (WH02).

5.0 SYSTEM LIMITATIONS, SET POINTS, AND PRECAUTIONS

This section describes the operating limits, set points, alarms, interlocks, and precautions as related to operation of the waste handling system. Consideration is given to general personnel safety, equipment safety and performance, and overall system performance. The information reiterates the limits, set points, and precautions imposed either implicitly or explicitly by the system operations described in Sections 4.0, 6.0, and 7.0.

The basic radiation safety limits are discussed, followed by the operational type limits. System type set points and alarm are presented, if any, and then the system interlocks.

5.1 Radiation Limits

The external surface dose rate of any individual CH TRU waste shipping package shall be less than or equal to 200 mrem/hr.

5.2 Operating Limits

All TRUPACT-IIs which will transport CH TRU waste from the WIPP site must have their seals pass a leak rate performance test which meets the NRC Certificate of Conformance for the CH Package.

5.3 Set Points and Alarms

None

5.4 Interlocks

None

5.5 Precautions

5.5.1 The gross weight of a loaded TRUPACT-II shall not exceed 19,250 lb, and the weight of the payload shall not exceed 7,265 lb. The gross weight of a loaded HalfPACT shall not exceed 18,100 lb, and the payload weight shall not exceed 7,600 lb. The gross weight of a loaded TRUPACT-III shall not exceed 66,140 lb, and the payload weight shall not exceed 12,970 lb.

5.5.2 Operator should verify that the proper T-handles are being used for the respective lids of the TRUPACT-IIs and HalfPACTs. Locking ring tool extensions are available to aid the operator in the rotation of the locking rings. They provide additional leverage and control to prevent slamming the locking ring up against the stop tabs. These tools should be used for all locking ring manipulations to minimize the possibility of damage to the locking ring stop tabs as recommended by CH Packaging Program Guidance (DOE/WIPP 02-3183).

5.5.3 Failure to rotate the counterweights on the ACGLF to the balance position (loaded or unloaded) could cause the ACGLF to swing resulting in personal injury or damage to other equipment.

6.0 OFF-NORMAL EVENTS

Refer to Section 6.0 of Chapter G for subsystem WH01 off-normal events.

7.0 MAINTENANCE

Refer to Section 7.0 of Chapter G for the maintenance requirements and approach related to waste handling subsystems.

WIPP site controlled procedures for corrective maintenance, preventative maintenance, and in-service inspection procedures apply to the following subsystem WH01 TRUPACT-II handling equipment:

- Trailer jockey
- Inner containment vessel spacer lifting device
- Room 108 7.5-ton monorail crane
- 25-ton TRUPACT maintenance facility bridge crane
- Strong back lifting fixture
- Inner containment vessel lid stand
- Outer containment assembly lid stand

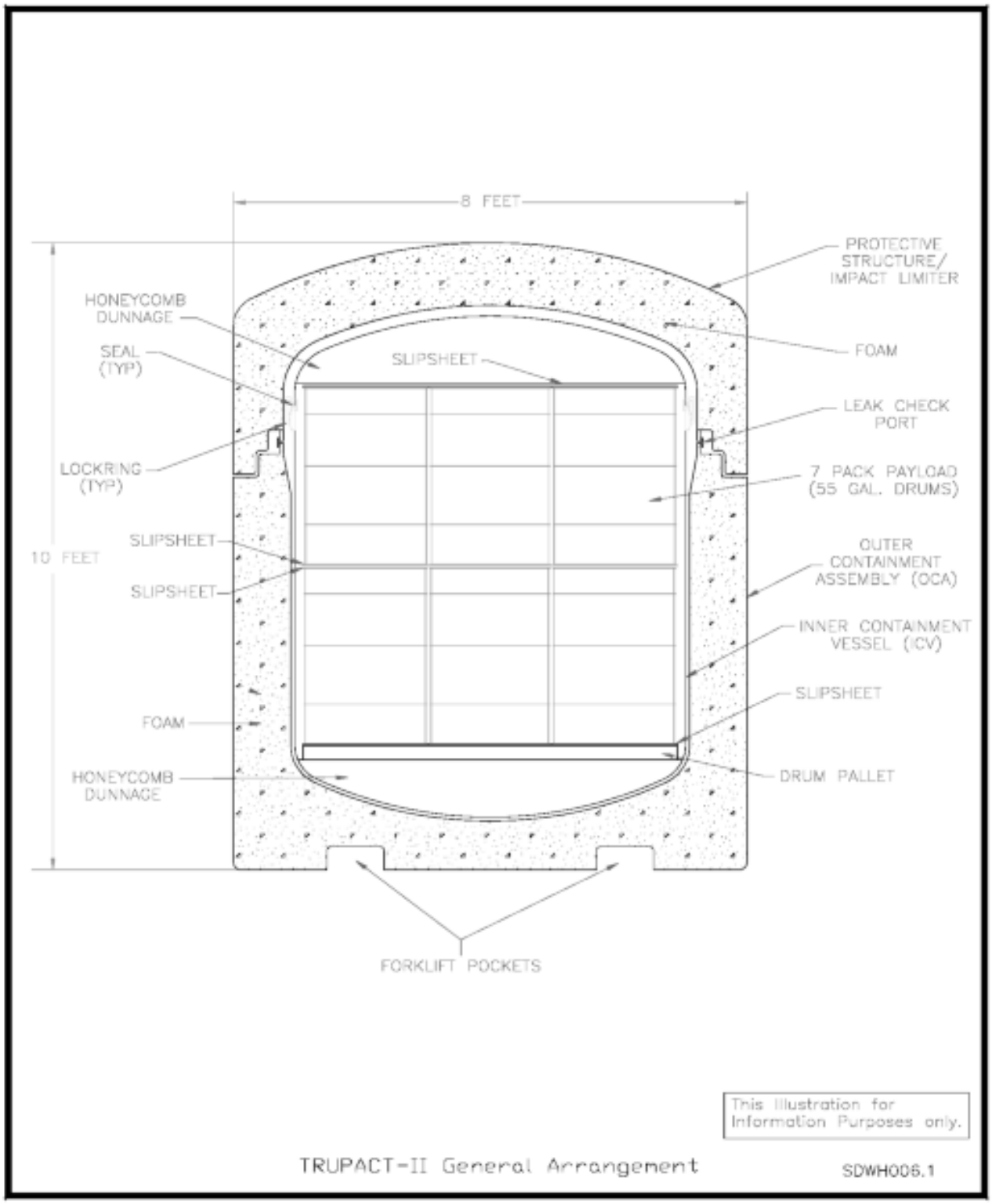

Figure WH I-I-1 – TRUPACT-II General Arrangement

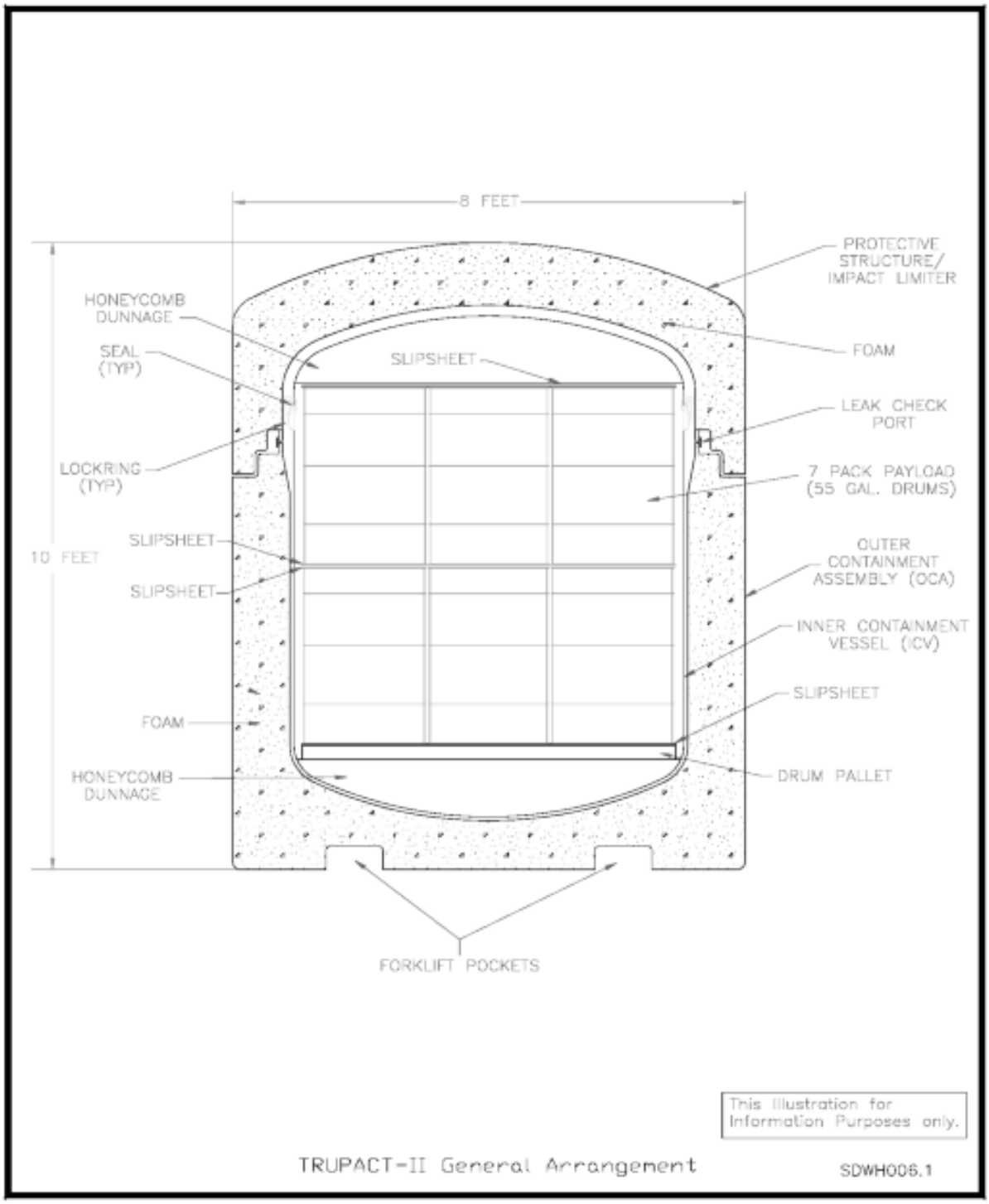

Figure WH I-I-2 – HalfPACT General Arrangement

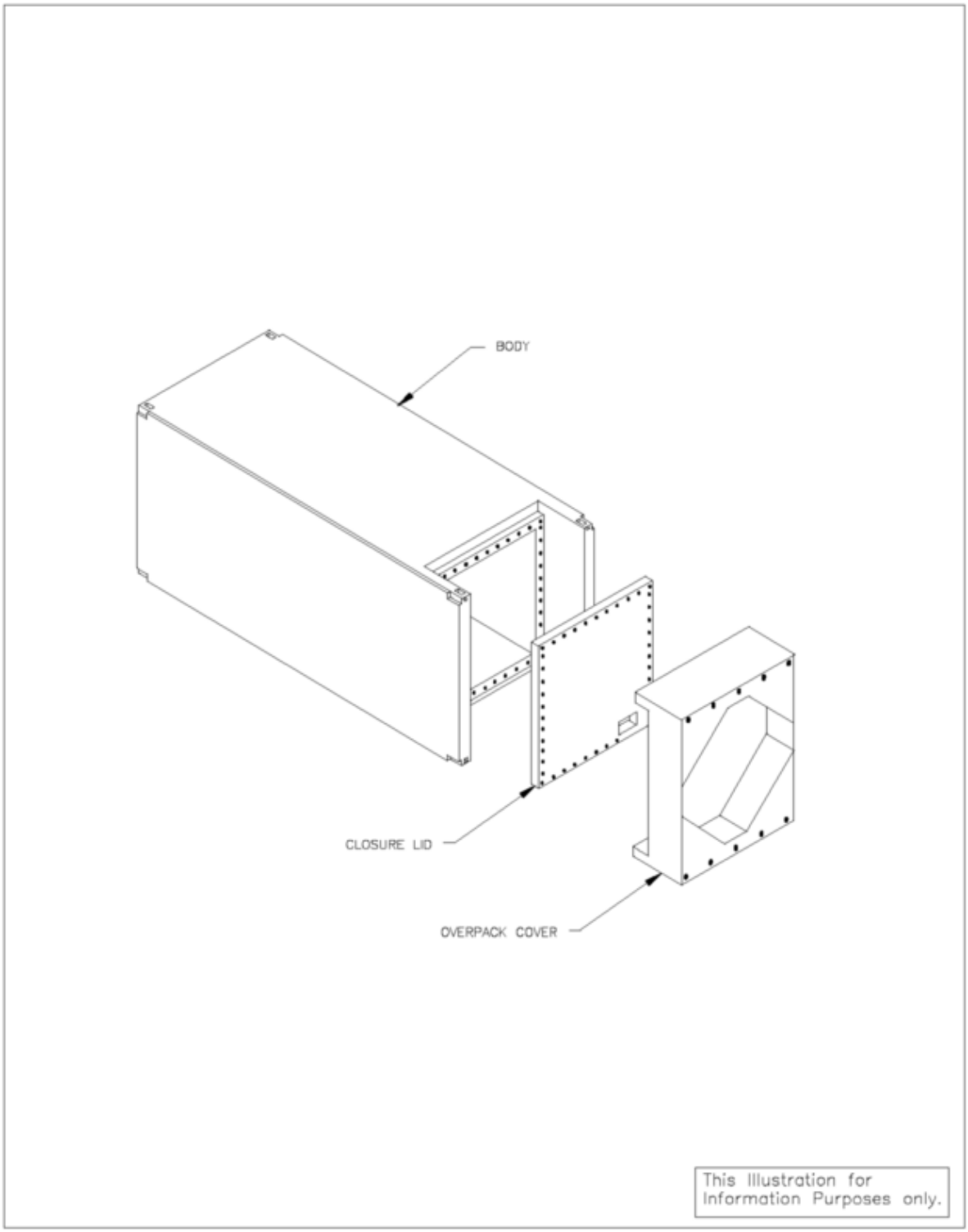

Figure WH I-I-3 – TRUPACT-III General Arrangement

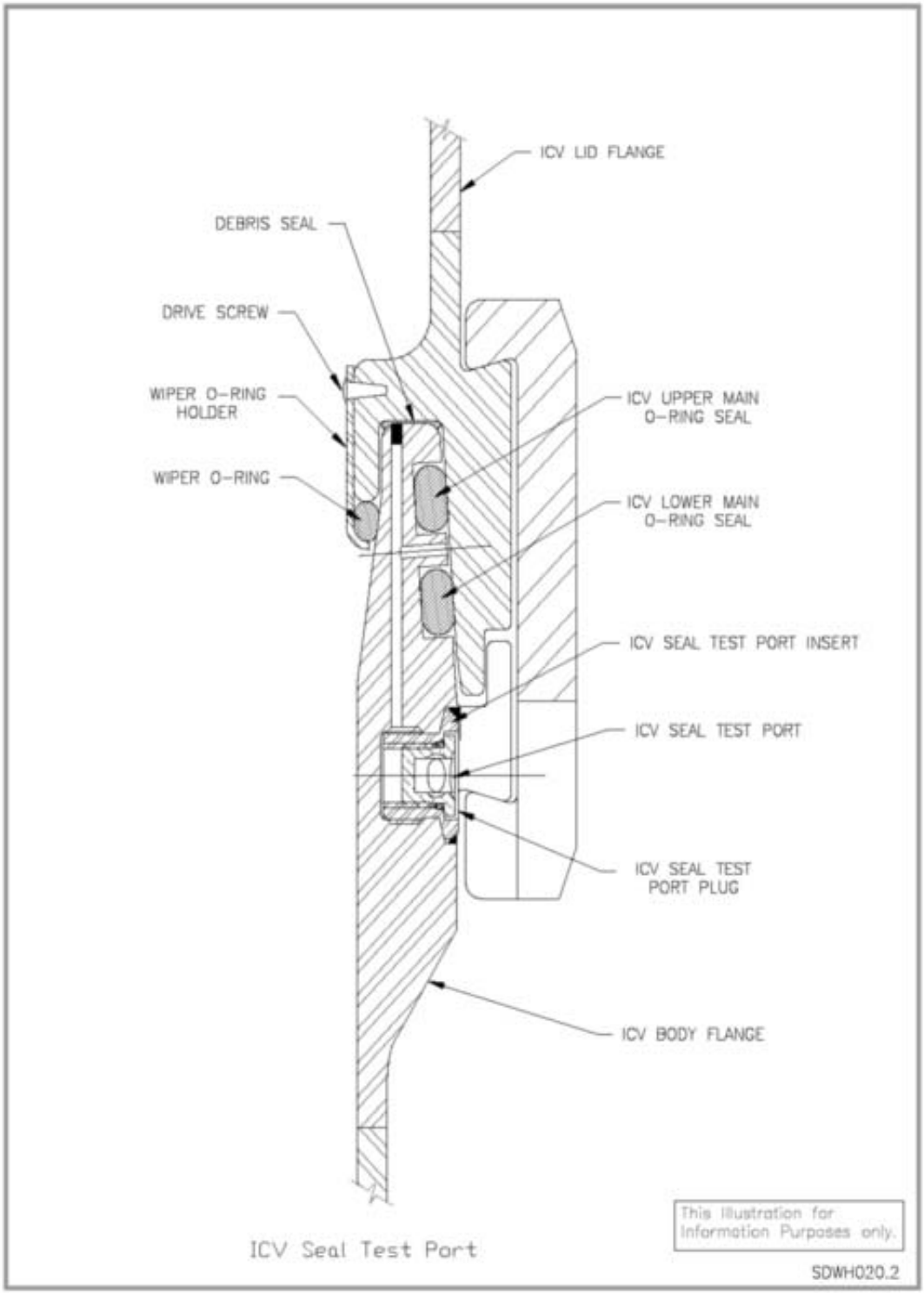

Figure WH I-I-4 – ICV Seal Test Port

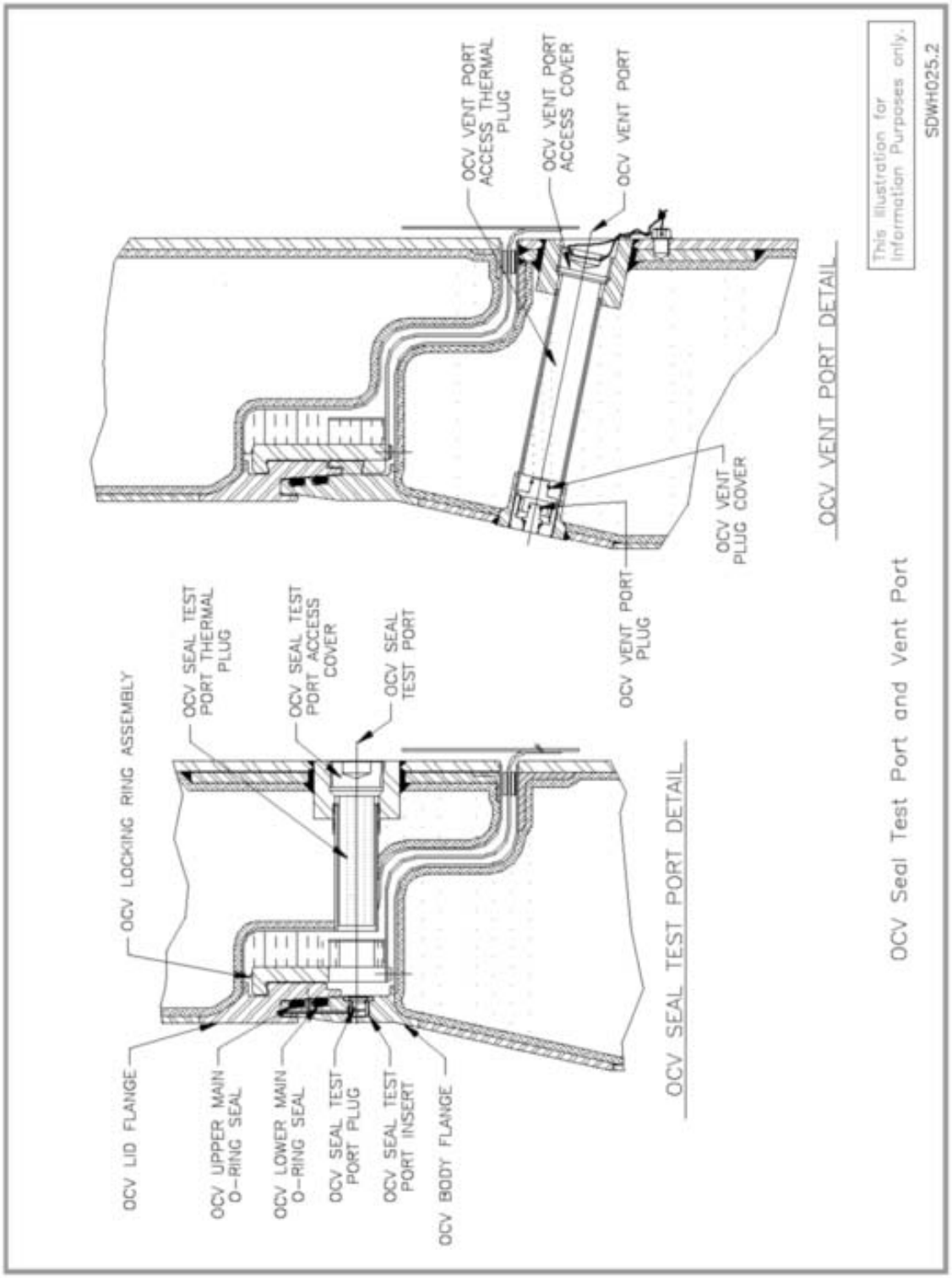

Figure WH I-I-5 – OCV Seal Test Port and Vent Port

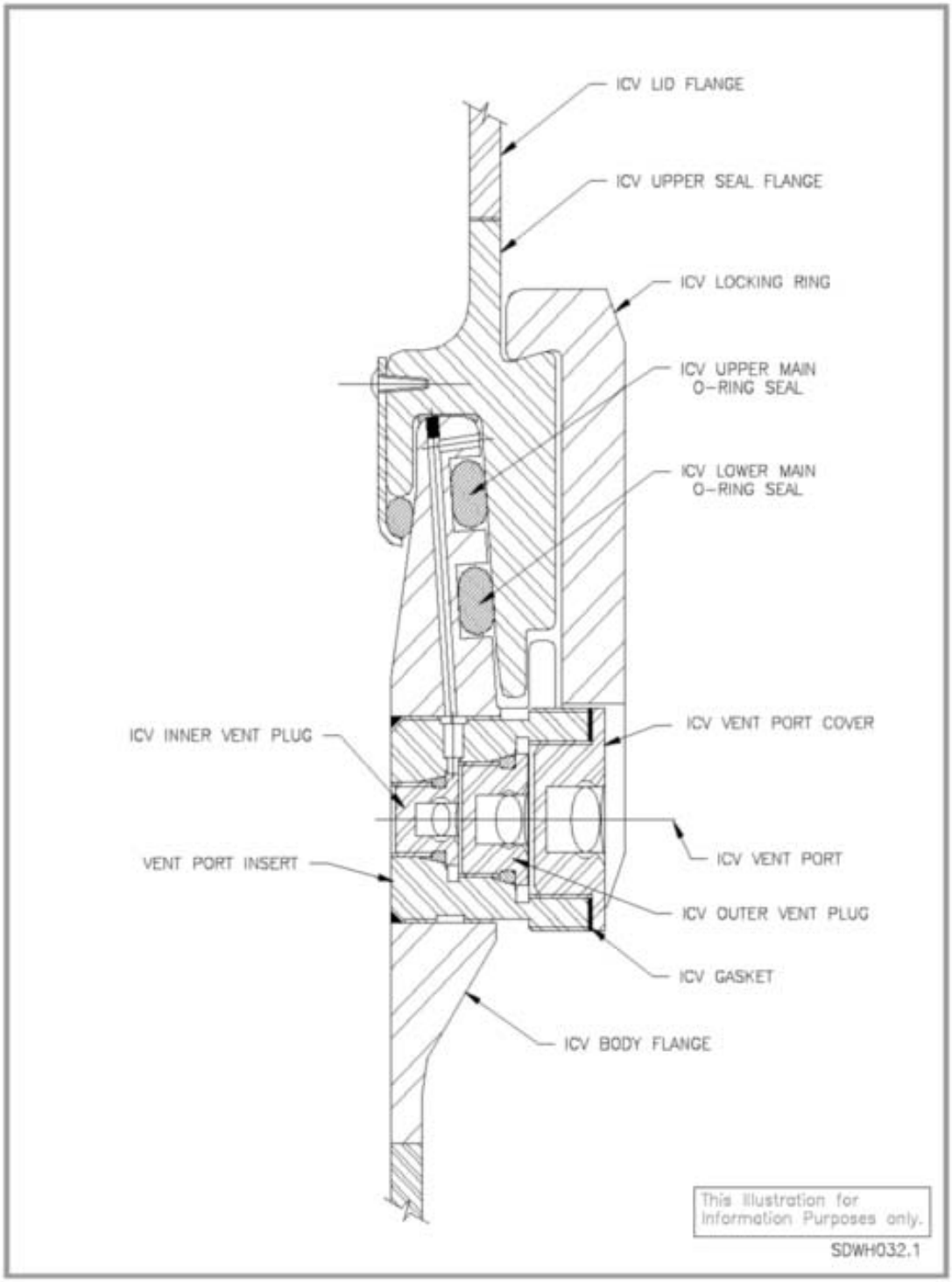

Figure WH I-I-6 – ICV Vent Port

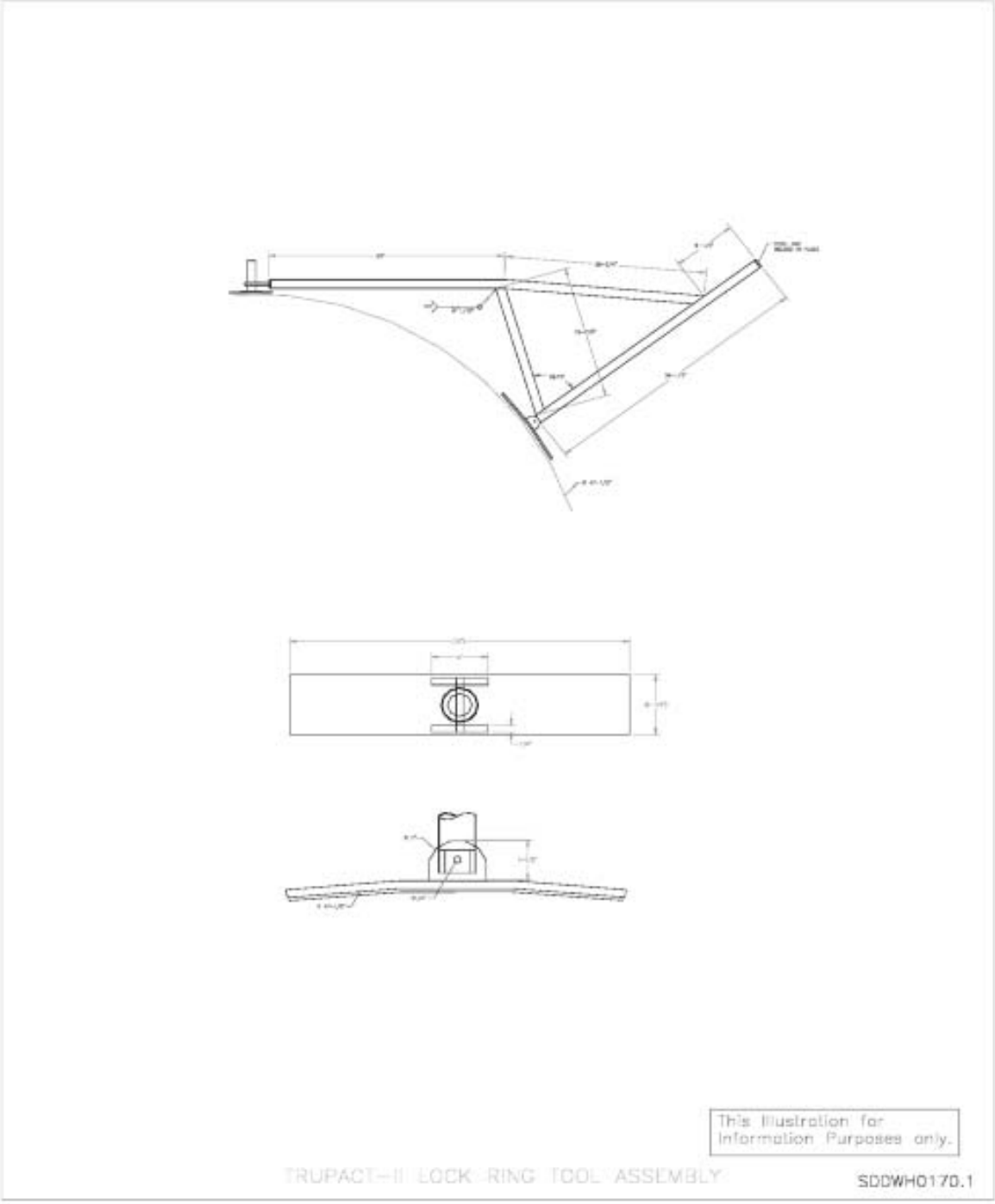

Figure WH I-I-7 – TRUPACT-II Lock Ring Assembly

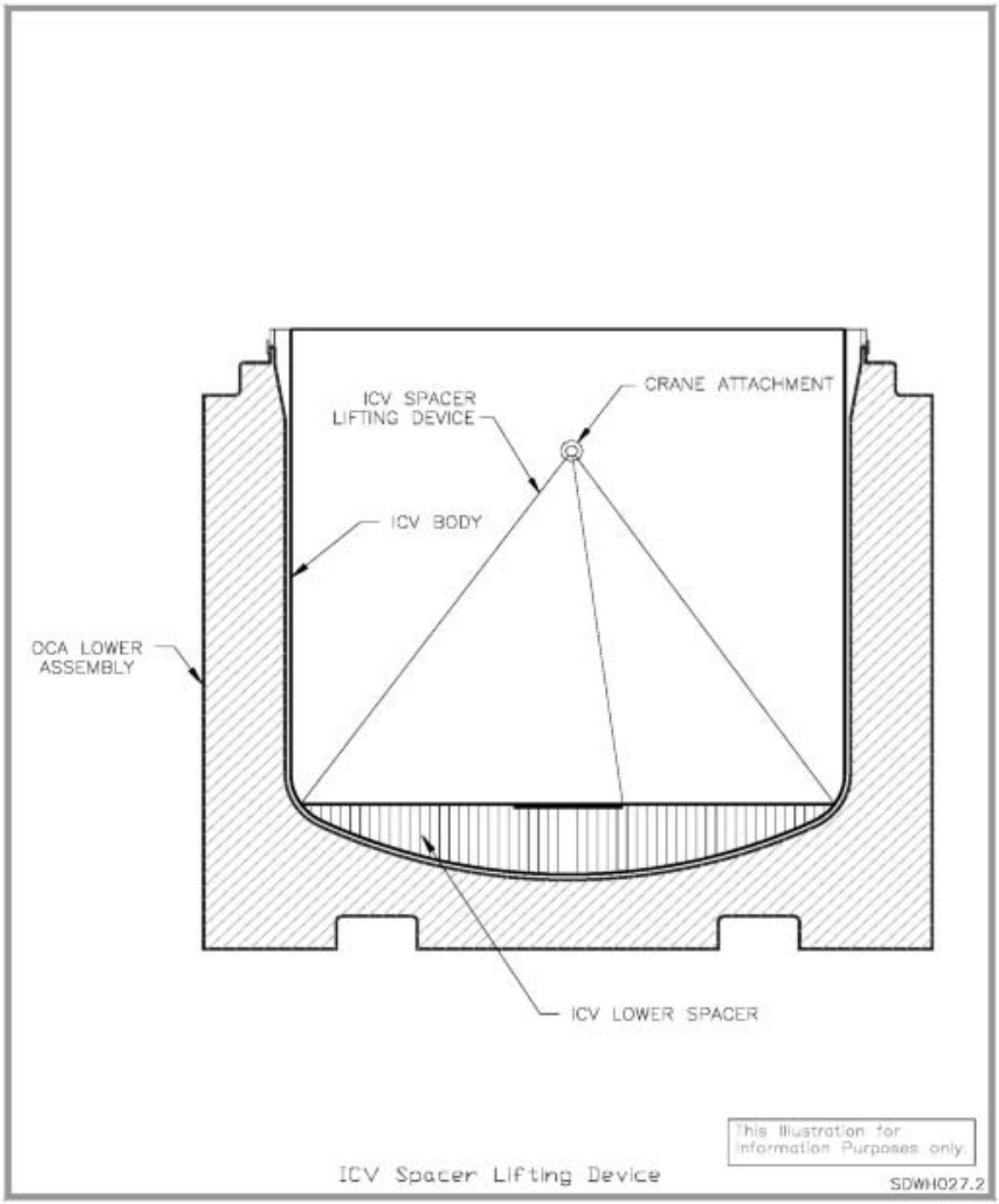

Figure WH I-I-8 – ICV Spacer Lifting Device

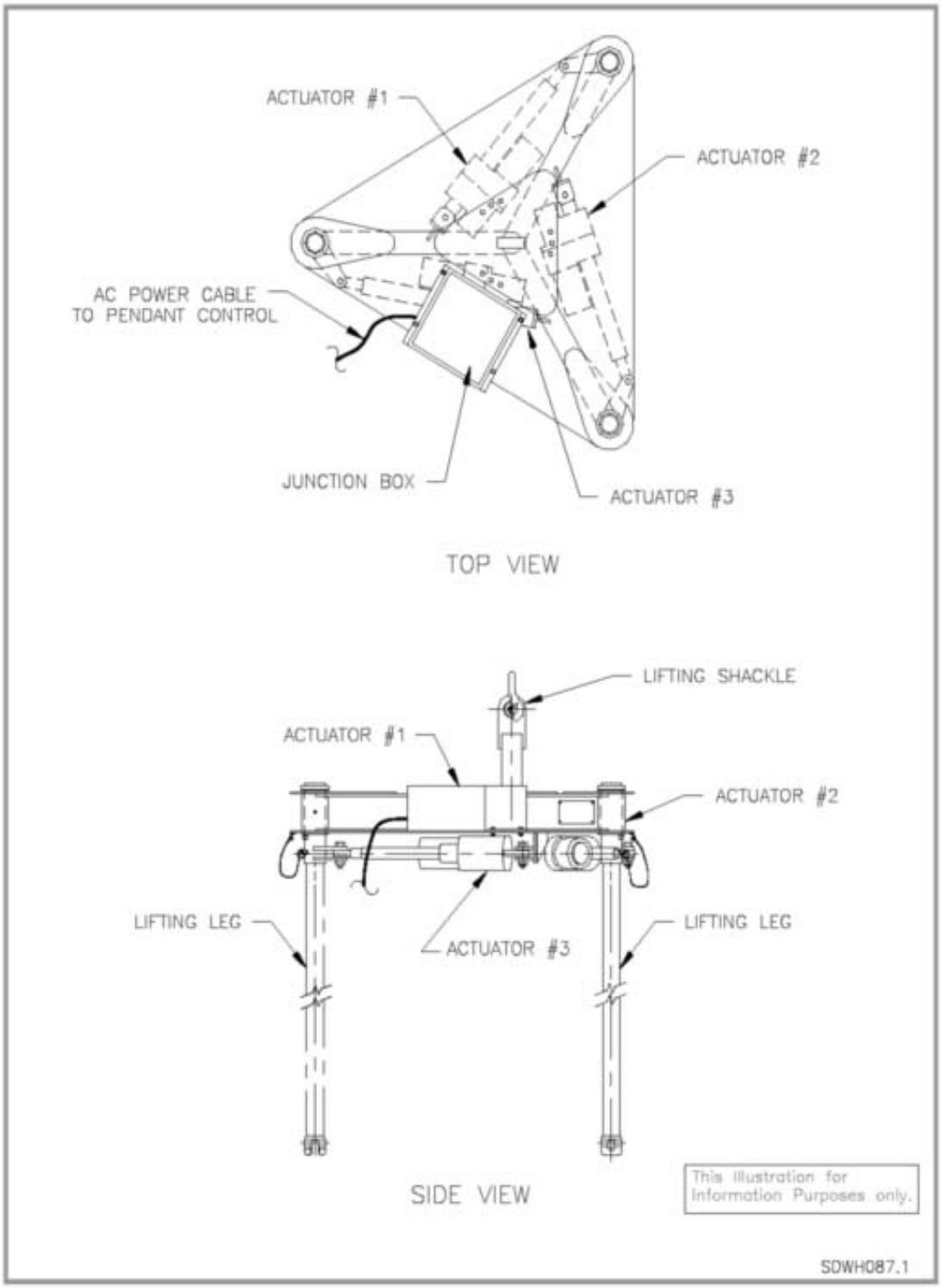

Figure WH I-I-9 – Non-Adjustable Center of Gravity Lift Fixture

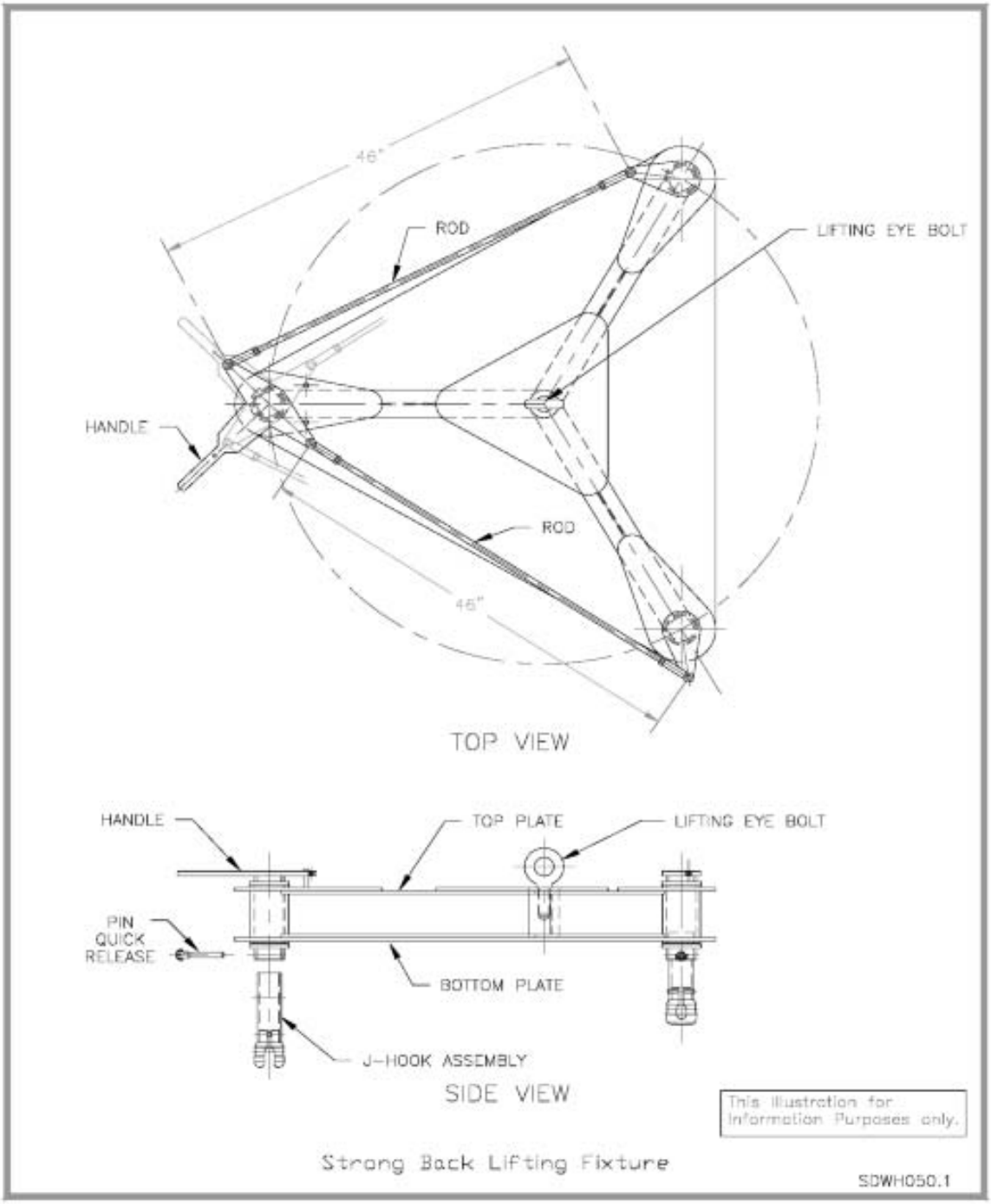

Figure WH I-I-10 – Strongback Lifting Fixture

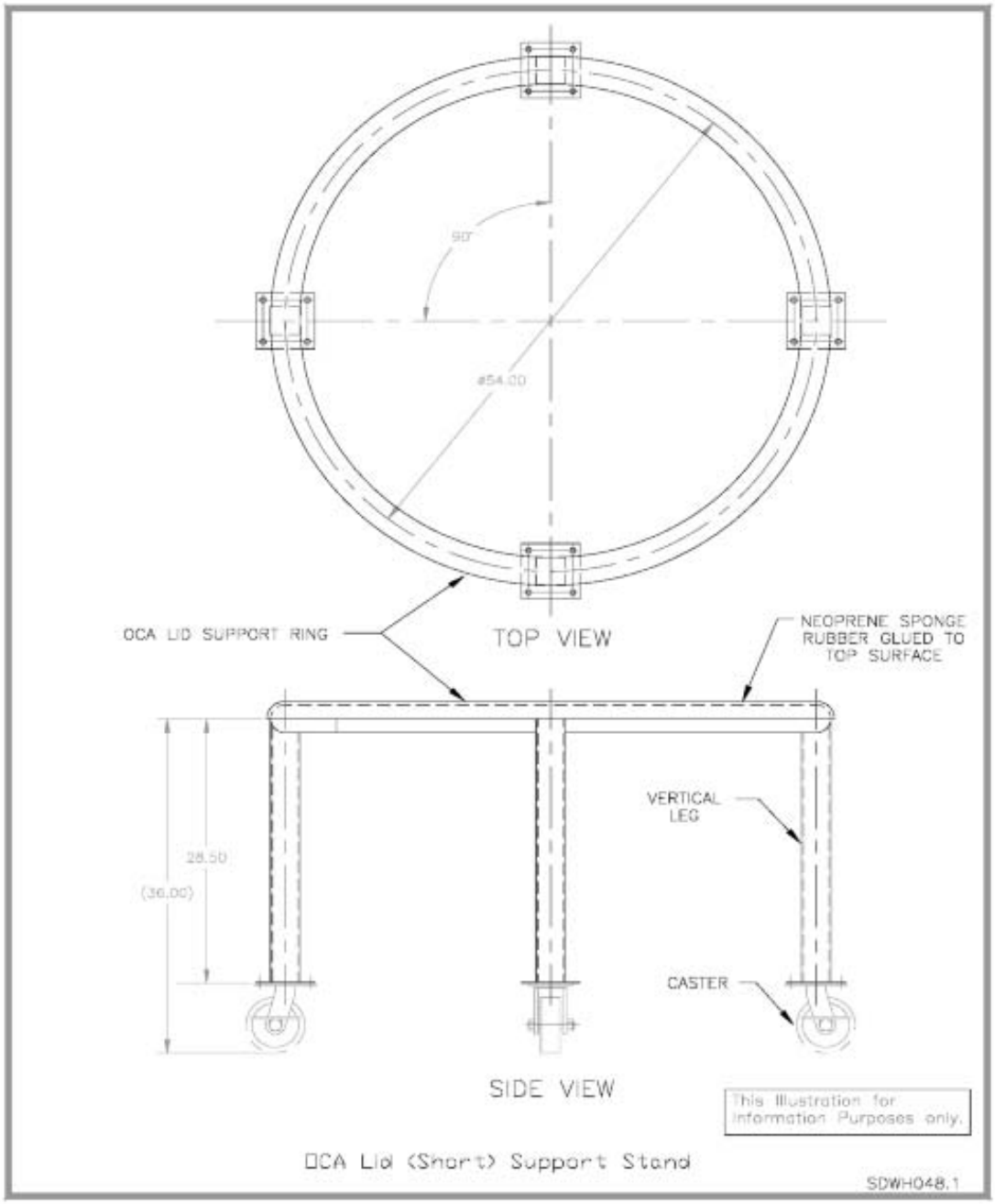

Figure WH I-I-11 – OCA Lid (Short) Support Stand

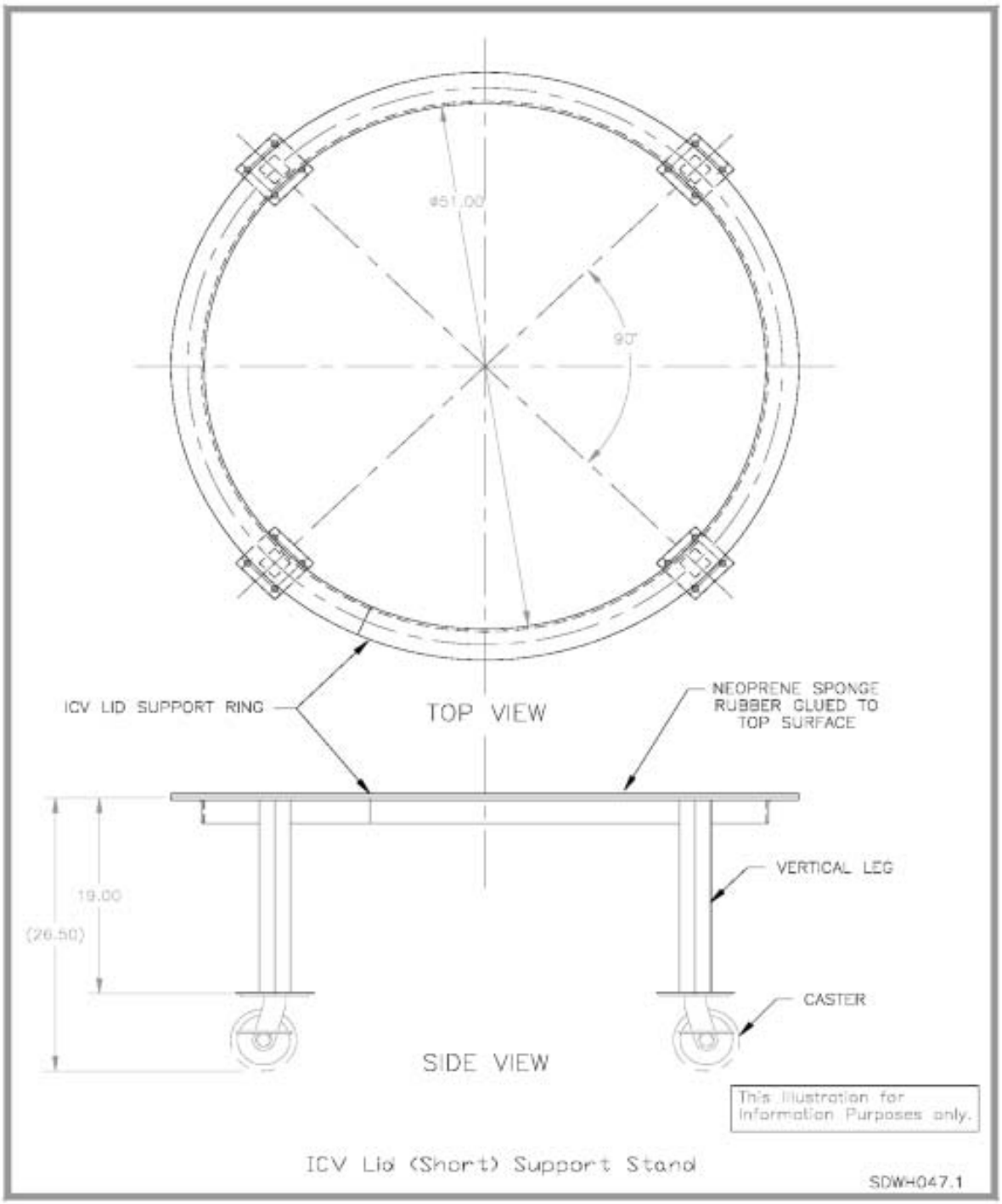

Figure WH I-I-12 – ICV Lid (Short) Support Stand

Part I, Chapter II
Table of Contents

Subsystem WH02, CH TRU Waste Handling Equipment Requirements, Design, and Operation

1.0 PRIMARY FUNCTIONS 1
2.0 DESIGN REQUIREMENTS 1
2.1 General Design Requirements 1
2.2 System General Requirements 1
2.2.1 WH02 General Requirements 1
2.2.2 WH02 Surface Requirements 2
2.2.3 WH02 Underground Requirements 3
2.3 Operational Requirements 5
2.3.3 Backfill 6
2.4 Structural Requirements 6
2.5 General Arrangements and Essential Features 6
2.6 Maintenance Requirements 7
2.7 In-Service Inspections 7
2.8 Instrumentation and Control Requirements 7
2.9 Interfacing System Requirements 7
2.10 Quality Assurance Requirements 7
2.11 Codes and Standards 7
2.12 Reliability assurance Requirements 7
3.0 DESIGN DESCRIPTION 8
3.1 Summary 8
3.2 Detailed System Description 8
3.3 System Performance Characteristics 11
3.4 System Arrangement 11
3.4.1 Surface Waste System Arrangement 11
3.4.2 Underground Waste Storage 12
3.5 Component Design Descriptions 12
3.5.1 CH Bay Equipment 12
3.5.2 TRUDOCK Stations Equipment 18
3.5.3 Underground Equipment 23
3.6 Instrument and Control 28
3.6.1 I&C for the Adjustable Cent of Gravity Lifting Fixture (ACGLF) 29
3.6.2 Adjustable Center of Gravity Lifting Fixture Control Console 29
3.6.3 I&C for the TRUDOCK 6-Ton Capacity Cranes 30
3.6.4 I&C for the TRUDOCK Vent Hood System 31
3.6.5 TRUDOCK Vacuum System Panels 31
3.6.6 I&C for the Transfer Vehicle 31
3.7 System Interfaces WH02 31
3.7.1 Primary Interfaces 32
4.0 OPERATION 33
4.1 Normal Operations – CH TRU Waste Handling 33
4.2 Support Operation 33

4.3 Recovery of CH TRU Waste 33
4.4 Decontamination of Waste Shipping Packages and Containers 34
5.0 SYSTEM LIMITATIONS, SET POINTS, AND PRECAUTIONS 34
5.1 Radiation Limits 34
5.2 Operating Limits 34
5.3 Set Points and Alarms 34
5.4 Interlocks 34
5.5 Precautions 35
6.0 OFF-NORMAL EVENTS AND RECOVERY 36
7.0 MAINTENANCE 36

List of Figures

Figure WH I-II-1 - Emplacement Area Arrangement 37
Figure WH I-II-2 - Typical Emplacement Flow 38
Figure WH I-II-3 - Flow of CH TRU Waste to the Underground 39
Figure WH I-II-4 - Facility Pallet 40
Figure WH I-II-5 - Adjustable Center-of-Gravity Lift Fixture 41
Figure WH I-II-6 - Standard Waste Box Lift Fixture Adapter 42
Figure WH I-II-7 - Ten-Drum Overpack Lift Fixture Adapter 43
Figure WH I-II-8 - Transfer Vehicle with Drums and Facility Pallet 44
Figure WH I-II-9 - TRUDOCK Exhaust System 45
Figure WH I-II-10 - CH Underground Transporters 46
Figure WH I-II-11 - Typical Push-Pull Attachment 47
Figure WH-I-II-12 - Super Sack 48
Figure WH I-II-13 - Waste Containers 49
Figure WH I-II-14 - 85-Gallon and Ten-Drum Overpacks 50
Figure WH I-II-15 - Super Sack Emplacement on Waste Stack 51
Figure WH I-II-16 - SWB Forklift Fixture 52
Figure WH I-II-17 - Vent Hood Containment Chamber 53
Figure WH I-II-18 - Radiation Assessment Filter Assembly 54
Figure WH I-II-19 - Four-Pack Lift Fixture Adapter 55

List of Tables

Table I-II-1 - I&C Equipment for WH02 1 28

Part I, Chapter II

Subsystem WH02, CH TRU Waste Handling Equipment Requirements, Design, and Operation

1.0 PRIMARY FUNCTIONS

Refer to Chapter G for the general primary functions.

2.0 DESIGN REQUIREMENTS

2.1 General Design Requirements

Refer to Chapter G for the general design requirements.

2.2 System General Requirements

2.2.1 WH02 General Requirements

2.2.1.1 The CH waste handling equipment shall be designed for use on CH TRU waste containers having a surface dose rate no greater than 200 mrem/hr, and free of surface contamination.

2.2.1.2 Any TRUPACT-II shipping package found to be carrying a surface contaminated waste container that exceeds the limits specified in 10 CFR Part 835, Appendix D and is less than 100 times those limits and less than or equal to 6 ft2, shall be decontaminated at the location where the contamination was found. If the radioactive contamination exceeds these limits; it may be decontaminated locally, returned to a DOE generator site, sent to a third-party contractor, or emplaced in the underground.

2.2.1.3 If a waste container is breached during the handling process at the WIPP, it shall be isolated and overpacked or decontaminated as needed at the point where the container was breached.

2.2.1.4 Where surface decontamination is impractical, equipment shall be provided for overpacking 55 gallon waste containers (drums) into larger overpacking containers. Overpacks for SWBs, 85-gallon drums, and 100-gallon drums shall also be available.

2.2.1.5 CH waste handling equipment and facilities shall have the capacity to handle and emplace site-derived waste.

2.2.1.6 Six-ton forklifts trucks equipped with push-pull attachments shall be provided to lift and move waste containers on the surface and in the underground facility. Waste containers may be seven-packs of 55-gallon drums, SWBs, TDOPs, 4-packs of 85-gallon drums, or 3-packs of 100-gallon drums. The push-pull rack unit-forklift combination shall have the capacity to handle

7,500-pound loads, which may be waste containers stacked one or two layers high. SWB forklift fixtures capable of moving individual SWBs without using slipsheets shall also be provided.

2.2.1.7 TRU waste is to be delivered to the WIPP site in containers which comply with the criteria listed in the Waste Acceptance Criteria (WAC); included are 55-gallon drums, 85-gallon drums, 100-gallon drums, Standard Waste Boxes, and Ten Drum Overpacks. Individual 55-gallon drums which require overpacking after receipt shall be overpacked using either an 85-gallon drum, a SWB, or a TDOP.

2.2.2 WH02 Surface Requirements

2.2.2.1 The material handling operations dealing with the Contact Handled packages or with the CH waste containers are designated pre-engineered production lifts as described in the DOE STANDARD-HOISTING and RIGGING (DOE-STD-1090, latest revision). Examples of typical containers are seven packs of drums, four packs of drums, three packs of drums, Ten Drum Overpacks (TDOP), and Standard Waste Boxes (SWB).

2.2.2.2 The environment within HalfPACT and TRUPACT-II ICVs shall be kept isolated from the environment of the WHB until a radiation assessment gas filter and smear survey samples show that surface contamination is within regulatory limits on the waste containers. If contamination is present, and falls within the criteria for small area "spot" decontamination (i.e., less than or equal to 100 times the limits specified in 10 CFR Part 835, Appendix D and less than or equal to 6 ft2 [0.56m2]), the shipping package or the waste container will be decontaminated locally.

2.2.2.3 Thirteen-ton capacity forklift trucks shall be provided which have the capability to unload HalfPACTs and TRUPACT-IIs from their transportation trailers (or rail cars) and move them through the WHB airlocks to support stands located in the pockets of the TRUDOCKs in the CH Bay of the WHB.

2.2.2.4 HalfPACT/TRUPACT-II staging stations, called TRUDOCKs, shall be provided where HalfPACTs and TRUPACT-IIs can be opened, unloaded (waste containers removed), cleaned, and reassembled for reuse. Each TRUDOCK shall have the following:

- Work stations capable of accepting two HalfPACTs, TRUPACT-IIs, or one of each type.
- Provision to have 360° access for personnel around each TRUPACT-II.
- Six-ton overhead bridge cranes to remove the OCA and ICV lids of the HalfPACT/TRUPACT-II shipping packages and remove the waste containers.

- Support stands for holding a HalfPACT or TRUPACT-II in a pocket of the TRUDOCK.

- Ventilation hoods, exhaust systems, vacuum systems, radiological survey systems (RM04), and tools needed to open the HalfPACT/TRUPACT-IIs (WH01) in a safe manner. Industrial grade HEPA type, pre filters to mitigate any release of radioactive contamination. Both the exhaust and vacuum systems shall be directly connected to discharge to the CH Bay HEPA filter exhaust system of HV00.

- Provision for storing the short and long legs of the Adjustable Center of Gravity Lift Fixture (ACGLF).

2.2.2.5 Facility pallets shall be provided to support the contents of two TRUPACT-IIs (two sets of two-high seven-packs of waste containers, two sets of two-high SWBs or two ten drum overpacks) or two HalfPACTs (two sets of single unit seven-packs, four packs, or SWBs). The facility pallets are used to move waste containers within the WHB and to the cage loading room (provided by system CF00) using the 13-ton battery powered forklifts.

2.2.2.6 A transfer vehicle shall be provided to transport a loaded facility pallet onto the waste hoist equipment platform.

2.2.2.7 A general purpose 3-ton battery powered utility forklift shall be provided to lift and move components, stands, and other miscellaneous items.

2.2.3 WH02 Underground Requirements

2.2.3.1 Underground transporters (diesel-powered articulated tractor trailers) shall be provided. The transporters are used to remove a loaded facility pallet from the waste hoist and transport the pallet to an underground storage room or to the facility pallet platform. The transporters shall be provided with automatic/manual fire suppression systems, rupture resistant fuel tanks, and reinforced fuel lines to minimize the potential for a fire involving the fuel system. The transporters are used to return the empty facility pallets to the waste hoist.

The underground waste handling equipment automatic/manual fire suppression system provides a dry chemical fire suppressant to extinguish vehicle fires associated with fuel line leaks and the vehicle engine. The system is comprised of electric powered detection capability, and a compressed nitrogen gas cartridge that, when actuated, fluidizes the fire suppressant powder and forces the powder to the distribution network. The system is equipped with a control module that includes system status lights to indicate normal and trouble conditions, and a provision to test the status lights. The system automatically actuates when the detection circuit shorts

due to heat generated by fire causing current to a squib. The squib is an electrically actuated component containing a small charge of powder which forces a pin to puncture the cap/seal on the compressed nitrogen gas cartridge. The gas is directed via tubing to the fire suppressant container where the suppressant is fluidized and dispersed into the distribution piping. The system also has a manual capability that bypasses the squib such that the manual actuator forces the pin to break the cap/seal on the compressed gas nitrogen cartridge. The control module includes status lights that indicate that the system is not discharged and that the detection circuit is functioning properly. The control module is mounted such that the operator of the waste handling equipment can see the system status indication.

The underground waste handling equipment automatic/manual fire suppression system is designed, installed, tested, and maintained according to the National Fire Protection Association (NFPA) Standards NFPA 17, Standard for Dry Chemical Extinguishing Systems. The automatic/manual fire suppression system on underground waste handling equipment is credited in the DSA. The fire suppression system on the WASTE HANDLING EQUIPMENT selected for use SHALL be OPERABLE. An OPERABLE fire suppression system consists of the following elements: **[TSR LCO 3.1.2]**

- A charged fire suppressant system;
- Detection circuit is IN-SERVICE.

Each Shift, the fire suppression system on the WASTE HANDLING EQUIPMENT selected for use is verified to have not discharged. **[TSR SR 4.3.2.1]** Fire suppression system trouble lights are verified to not be illuminated, using the following procedures: **[TSR SR 4.3.2.3]**

- WP 05-WH1412, CH Waste Handling Toyota Forklifts
- WP 05-WH1603, CH TRU Underground Transporter, 52-H-008A, B, & C

Semiannually, the fire suppression system controls on the WASTE HANDLING EQUIPMENT are tested using WP 12-FP0060, Semi-Annual Test of Automatic Fire Suppression for Diesel Powered Waste Handling Equipment. **[TSR SR 4.3.2.2]**

2.2.3.2 The WH02 subsystem shall provide the facilities and equipment to emplace pre-packaged backfill material as described in the applicable regulatory documents.

2.2.3.3 Magnesium oxide (MgO) will be used as backfill, and will be provided in super sacks, which are shown in Figure WH I-II-12, and are defined in specification D-0101. The super sack will be a hexagonal container which is nominally 61 in. across the flats and 25.5 in. high.

2.2.3.4 A platform shall be provided and located in the underground to support a facility pallet loaded with waste containers. The purpose of the platform (called the facility pallet platform) is to provide a station where a forklift can directly access and lift waste containers from either end of the facility pallet and move them to their assigned emplacement/storage positions.

2.3 Operational Requirements

Refer to Chapter G for the general operational requirements. The following are subsystem WH02 specific operational requirements.

2.3.1 If containers of CH waste are to be recovered, they shall be individually examined for structural soundness and the absence of surface contamination. Those CH waste containers which are determined to be unsatisfactory will be overpacked in a suitable manner before being brought to the surface.

2.3.2 Figure WH I-II-1 shows the locating dimensions for the stacks of waste containers in the underground emplacement areas, and also illustrates one possible arrangement of waste containers in these stacks. The location dimensions will provide a minimum of 8 in. of space between the sidewall and the waste containers, and will also provide room to allow any waste containers to be placed on any location. Waste containers will be emplaced in the order they are received. Typical stacks of waste containers include seven-packs, SWBs, TDOPs, 3-packs, and 4-packs as illustrated in Figures WH I-II-13 and WH I-II-14. Different stack configurations may result from the order of shipment receipts. The restrictions on the stacks are as follows:

1) TDOPs will only be placed on the bottom layer.

2) 4-packs of 85-gallon drums, or 3-packs of 100-gallon drums will be placed on top of assemblies of the same type or placed on the top row for stability.

This stacking pattern also makes provision for the emplacement of an occasional single 55-gallon drum of site-derived waste or a single 85-gallon drum overpack along the rib. Figure WH I-II-2 illustrates the typical emplacement flow, with an intersection.

The waste containers shall be free of external active contamination exceeding the limits specified in 10 CFR 835, Appendix D. However, should there be any contamination exceeding the limits, two options are available. If the contamination falls within the criteria for small area "spot" decontamination (i.e., less than or equal to 100 times the limits specified in 10 CFR Part 835, Appendix D and less than or equal to 6 ft2 [0.56 m2]), the shipping package or the waste container shall be decontaminated at the location where the contamination was found.

For large area contamination, the waste shall either remain in, or be returned to, the TRUPACT-II and the shipping container shall be resealed and a suitable disposition shall be determined.

2.3.3 Backfill

A waste stack may consist of several waste container packages (i.e., three SWBs, three seven-packs, a TDOP with a seven-pack on top of it, etc.) with one super sack on the top. Typical super sack emplacement is shown in Figure WH I-II-15. Additional supersacks may be provided in rooms as needed and may be placed in racks or on the ground. Other configurations may result as listed in Section 2.3.2. The super sack may be placed on the last waste container package to go in the stack, and the two items placed in the waste stack as a unit, or the two items may be emplaced separately. See Figure WH I-II-15.

Normal operations for receipt and emplacement of seven-packs of drums containing CH TRU waste do not include removal of empty drums received as dunnage in the seven-pack. Seven-packs consisting entirely of empty drums will be dispositioned in the most cost efficient manner (returned to the generator site, scrapped, etc.)

2.4 Structural Requirements

Refer to Chapter G for the general structural requirements.

2.4.1 The WH02 equipment designated to hold their load in place in the event of a Design Basis Earthquake (DBE) is as follows:

- TRUDOCK 6-ton bridge cranes
- Facility Pallet Stands

2.4.2 The functional classification for the SSCs identified in this system shall be performed and documented in accordance with WP 09-CN3023 Functional Classification procedure and the functional classification section of the General Plant Design Description (GPDD). The process for establishing functional classification is contained in the DSA. Documentation of the Functional Classification analysis shall be in accordance with WIPP Configuration Management procedures.

2.5 General Arrangements and Essential Features

Refer to Chapter G for general arrangements and essential features.

2.6 Maintenance Requirements

Refer to Chapter G for the general maintenance requirements.

2.6.1 HEPA type roughing filters provided by the WH02 subsystem shall be designed for contact-handling and bagging during filter replacement.

2.7 In-Service Inspections

Refer to Chapter G for the general in-service inspections.

2.8 Instrumentation and Control Requirements

Instrumentation and control equipment including operating stations and panels shall be provided to operate Subsystem WH02 equipment. Specific requirements for Subsystem WH02 are:

2.8.1 Operator controls and indicators shall be provided to operate the TRUDOCK ventilation exhaust systems, vacuum systems, gates, ACGLFs, and 6-ton overhead bridge crane.

2.8.2 Operator controls and indicators shall be provided to operate the transfer vehicle in the cage loading room and conveyance hoist.

2.8.3 Operator controls and indicators shall be provided for the forklifts and the underground transporter as part of the commercially procured equipment.

2.9 Interfacing System Requirements

Refer to Chapter G for the primary and secondary interfacing requirements.

2.10 Quality Assurance Requirements

Refer to Chapter G for the proper quality assurance requirements.

2.11 Codes and Standards

Refer to Chapter G for the codes and standards.

2.12 Reliability assurance Requirements

Refer to Chapter G for general reliability requirements.

Where appropriate, equipment used to handle CH TRU waste shall have spare backup equipment and/or alternate handling processes to assure that waste processing operations are not adversely impacted by the mechanical breakdown of any one tool or handling device.

3.0 DESIGN DESCRIPTION

This section provides a detailed description of the CH TRU waste handling system (Subsystem WH02) components, arrangements, performance characteristics, instrumentation and control, and system interfaces.

3.1 Summary

The CH TRU waste handling system provides the equipment to handle and emplace as well as recover waste containers received in shipping packages from various government sites. The waste handling system includes provisions for emplacing backfill containers in the underground emplacement areas.

Specific pieces of equipment of the CH TRU waste handling system are credited with preventing or mitigating accidents analyzed in the Documented Safety analysis (DSA). The following CH TRU waste handling system equipment (WH02) is credited with specific design features within the DSA.

- TRUDOCK Cranes **[TSR DF 6.4]**
- Facility Pallet **[TSR DF 6.5]**
- Underground Liquid-fueled Vehicles **[TSR DF 6.6]**
    - Underground Transporters (WH02)
    - 6-Ton Capacity Diesel-Powered Forklift (WH02)
    - 7.5-Ton Capacity Diesel-Powered Forklift (WH02)
- Battery-Powered Waste Handling Equipment **[TSR DF 6.7]**
    - 13-Ton Capacity Forklift (WH02)
    - 6-Ton Capacity Forklift (WH02)
    - 3-Ton Capacity Forklift (WH02)

3.2 Detailed System Description

Subsystem WH02 provides, fixtures and equipment to perform the following:

- Remove shipping packages from the delivery vehicles in the yard and transport them into the WHB.
- Provide physical support for the shipping packages and provide a working surface for waste handling operators during the opening and unloading operations.

- Contain and control contamination through the use of a vent hood system during the opening process.

- Transport waste containers within the WHB between the unloading area and the Waste Hoist Collar. Also provide transport between the Waste Hoist Station and the emplacement location in the underground.

- Provide for the overpacking of contaminated and/or damaged waste containers, and the safe handling and transportation of overpack containers.

- Relocate equipment or components as required.

CH TRU waste is transported to the WIPP site by means of HalfPACTs and TRUPACT-IIs (shipping packages) transported by special tractor/trailer combinations. The HalfPACT/TRUPACT-II payload (waste containers) is removed and processed through the CH waste handling area and moved to its ultimate storage location underground. Figure WH I-II-3 shows the flow of CH TRU waste from the receipt of a HalfPACT or TRUPACT-II loaded trailer to the Waste Hoist Shaft. Rail facilities are available for CH Waste, but there are no current plans for their use.

CH waste handling begins by unloading the Contact Handled shipping packages (HalfPACTs and TRUPACT-IIs) from the transportation shipping trailers. Forklifts move the shipping packages into the WHB, through the airlocks, and place them on shipping package support stands located in the TRUDOCK pockets. Forklifts are also used to move HalfPACTs, TRUPACT-IIs, and facility pallets (loaded or unloaded) within the WHB.

The TRUDOCKS are structural elevated platforms for inspection, dose rate and contamination surveys, HalfPACT, TRUPACT-II, and waste container lifting and handling. Each TRUDOCK has:

- Two work stations

- Two 6-ton bridge cranes

- ACGLFs used in conjunction with each 6-ton bridge crane

- Suitable lifting fixtures including SWB lift fixture adapters, TDOP lift fixture adapters, and four-pack lift fixture adapters

- Two sets of stands (WH01) to support the outer and inner HalfPACT/TRUPACT-II lids

- A vent hood system for confinement of potential contamination

- A vacuum system to assist lid removal
- A set of tools for opening and closing the TRUPACT-IIs

The vent hood system and vacuum systems both exhaust into a common TRUDOCK filtered exhaust system which, is ducted to the WHB HEPA filtered exhaust system (HV01).

Facility pallets support waste containers removed from the HalfPACT/TRUPACT-IIs for conveyance to the underground and are continually cycled between the surface and underground. The loaded facility pallets are:

- Transported to the waste shaft conveyance by the transfer vehicle
- Moved underground by the waste shaft conveyance
- Off-loaded onto the diesel-powered transporter
- Transported to the emplacement area and unloaded

Battery powered 6-ton capacity forklifts are available for use in both the WHB and underground. Diesel powered 6-ton capacity forklifts are available for use underground. The electric forklifts are equipped with push-pull attachments which can handle both waste containers and backfill super sacks. A 6-ton-capacity diesel powered forklift with push-pull attachment is available and is capable of emplacing backfill super sacks on top of the waste stacks. A 3-ton-capacity battery-powered forklift is provided for general utility in the WHB.

The underground facility pallet platform is available to permit a forklift with an appropriate fixture to access, lift, and transfer waste containers from the platform to their emplacement location.

A CH Payload Recovery Bar is provided in the underground to facilitate removal of SWBs and TDOPs from the facility pallet if a fiberboard slip sheet tab fails. It is used in conjunction with the push-pull attachment and a synthetic web sling with a minimum rating of 3.5 tons.

The 6-ton diesel forklifts with the 8,500-lb capacity push-pull attachments may be used to emplace waste containers in the waste stacks, and to emplace backfill super sacks on the top of the waste stack. The 6-ton battery powered forklifts with the 7,500-lb capacity push-pull attachments may be used to emplace waste containers in the waste stacks.

TRUPACT-III waste handling equipment details will be added as design details are finalized.

3.3 System Performance Characteristics

The CH TRU waste handling subsystem shall exhibit the following system performance characteristics:

3.3.1 CH waste handling equipment and facilities shall have the capacity to handle and emplace site-derived waste.

3.3.2 The expected average throughput rate is 250,000 ft^3/yr, which requires handling approximately 9.7 TRUPACT-II packages per day for 250 days per year to emplace 34,000, 55-gallon drums per year.

3.4 System Arrangement

All incoming and outgoing waste package shipments to and from the WIPP site are handled in an area on the south of the WHB. All waste processing and handling operations on the surface are performed in the WHB. Figure G-1 shows the surface waste handling system arrangement for the WHB and the CA.

The CH TRU waste is received and handled in the west end and the RH TRU waste in the east end of the WHB. Both waste handling operations feed into the waste shaft conveyance to move the waste containers and canisters to the underground for emplacement and storage.

3.4.1 Surface Waste System Arrangement

3.4.1.1 CH Waste Area

Refer to Figure G-1. On the north side of the CH Bay, there are seven areas. From west to east, these are:

- Room 108 in which are:

  - Associated airlocks
  - 7.5-ton crane (WH01)

- The anti-contamination clothing room and airlock

- Waste handling operations tool room

- Unassigned rooms (109, 110, 111, and 112) in which are:

- The liquid waste collection sump (not used)
- The anti-contamination clothing room and airlock (not used)
- The Waste Handling tool room (not used)

- The main personnel airlock hall (Room 114)
- The conveyance loading room (Room 116)
- The waste shaft entry room (Room 117)

There are two TRUDOCK stations located in the CH Bay. The two TRUDOCK stations are positioned parallel to each other. These are the stations at which the CH TRU waste containers are unloaded from the HalfPACT and TRUPACT-II shipping packages.

A collection sump pit is located approximately 15 ft below the floor level in Room 112. See Figure G-1 for location. The sump is designed to collect all liquids which could be released in the CH Bay or the floor above. Liquids could include fire suppression water, rain water, and other sources.

3.4.2 Underground Waste Storage

Figure WH I-II-1 shows a typical underground disposal storage area. After the CH TRU waste containers are lowered to the underground horizon on the waste shaft conveyance, the waste packages are moved to predesignated locations in the underground for emplacement.

3.5 Component Design Descriptions

3.5.1 CH Bay Equipment

3.5.1.1 13-Ton Capacity Forklifts

There are three heavy duty industrial 13-ton capacity forklifts. These forklifts are used to unload the HalfPACT and TRUPACT-IIs from their transportation trailers (or rail cars), move them through the WHB airlocks to support stands located in the pockets of the TRUDOCKs in the CH Bay of the WHB. They are also used to move and transfer facility pallets with or without a load of waste containers.

Each of the 13-ton capacity forklifts has the following features:

Hydraulic Fluid Ignition Temperature .....exceeds 400 degrees

Lifting Capacity .....26,000 lb at a 54.0-in. load center

Lift Height (maximum).....90.0 in.

Fork Size .....84.0 in. long
.....8.5 in. wide
.....3.5 in. thick

Fork Spacing .....60.0 in. (centerline to centerline)
Fork Positioner (optional).....8.5 to 72 in. (center to center)
Side-shifter (optional) .....± 6 in. (L to R)

Weight with Battery (maximum).....47,000 lb

All components located in the hydraulic compartment are designed to operate at a temperature below 135 degrees F. All sources of ignition are separated from combustibles. Batteries are separated from hydraulic components. Forklift battery terminals are covered to protect them from electrical shorting by falling objects. These characteristics are credited in the DSA. The battery-powered CH WASTE HANDLING EQUIPMENT is designed and maintained with their cables and connections insulated or protected to prevent electrical shorting and to operate at a low temperature which reduces the frequency of the equipment to initiate fires. **[TSR DR 6.7]**

The forklift construction is robust with heavy steel plating on sides and rear and forklift carriage on the front that protect the forklift components from damage in case of a collision.

The forklift drive units use DC motors which are battery powered. The forklifts can operate for one shift before the batteries have to be recharged. Each forklift has a high volume pump unit that supplies the fluid power for lift, tilt and sideshift of the forks. A separate hydraulic power unit supplies fluid power for braking and steering.

3.5.1.2 Facility Pallets

The facility pallets are welded steel assemblies that are used to move waste containers within the WHB and to the underground storage area. Each pallet is approximately 156 in. long, 108 in. wide, and 9 in. high. The pallets weigh approximately 4,200 lbs., and have a rated load capacity of 25,000 lb.

The facility pallet provides a contiguous flame barrier between a fire and the WASTE loaded on the CH Transporter. **[TSR DF 6.5]**

Four full-length polyethylene skids are bolted to the bottom of each facility pallet to facilitate sliding the pallet from the waste shaft conveyance platform onto the underground transporter. There is a 1.25-in. diameter steel pin welded across a 3.5-in.-wide recess at each end of the facility pallets that is used to pull a facility pallet onto the underground transporter.

There are two pockets, each approximately 72.5 in. in diameter by 3 in. deep, in the top plate of each facility pallet. See Figure WH I-II-4. The pockets accommodate placement of two payloads, which may be either one or two layers high, and will be strapped down as shown in Figure WH I-II-8 to four holding bars recessed into the top plate of the facility pallet.

The quantity of facility pallets is tracked in the WIPP equipment register.

3.5.1.3 Transfer Vehicle (Typical)

The transfer vehicle, shown in Figure WH I-II-8, is used to move the facility pallets from the conveyance loading room onto the waste shaft conveyance platform. It is an electrically operated, front wheel drive car that moves forward or reverse between the conveyance loading room to the waste shaft entry room (east-west direction) on two rail tracks. It has an elevating deck that raises or lowers the facility pallet to transfer it on or off the waste shaft conveyance platform. Two pintles on the transfer vehicle platform, spaced to match corresponding openings in the bottom of the facility pallet, prevent the pallet from sliding or moving off the transfer vehicle.

The transfer vehicle is battery-powered, driving two or four wheels. The deck has an up-down motion and is powered by the on-board battery. The car has the following approximate dimensions:

Vehicle length (approximately).....160 in.

Vehicle width (approximately) .....89 in.

Vehicle top surface above floor approximately .....35 in.
(with screw jacks in full up position)

3.5.1.4 6-Ton Capacity Forklift

There is one battery powered 6-ton forklift in the CH Bay of the WHB. It has a hydraulically operated side-shift positioner for shifting the load to the right or left. Either standard type forks or specially designed fixtures can be attached to the positioner for lifting different loads. The forklift has the following features:

Lifting capacity (maximum) .....13,500 lb at a 24-in. load center
With 7,500 lb. capacity attachment .....7,500 lb at a 33-in. load center

Lift height (maximum) .....118 in.

Fork size .....48 in. long, 6 in. wide, and 2 in. thick

Fork spacing (maximum).....35 in. (centerline to centerline)
Fork positioner (optional) .....(disabled – powers push-pull attachment)
Side-shifter (optional).....± 6 in. (L to R)

Forklift weight with battery (maximum).....20,000 lb

All components located in the hydraulic compartment are designed to operate at a low temperature. All sources of ignition are separated from combustibles. Batteries are separated from hydraulic components. Forklift battery terminals are covered to protect them from electrical shorting by falling objects. These characteristics are credited in the DSA. The batter-powered CH WASTE HANDLING EQUIPMENT is designed and maintained with their cables and connections insulated or protected to prevent electrical shorting and to operate at a low temperature which reduces the frequency of the equipment to initiate fires. **[TSR DF 6.7]**

The 6-ton forklift can operate for one shift before requiring a recharge of the batteries. It can be operated with different attachments as listed below:

- A 7.500 lb. capacity push-pull rack fixture to handle waste containers (seven-packs, SWBs, or TDOP) on slip sheets
- An SWB forklift fixture to lift and move individual SWBs
- Two forks for lifting loads

3.5.1.5 3-Ton Capacity Forklift

There is one 3-ton capacity forklift that is used to lift and move components, stands, and other miscellaneous items in the CH Bay of the WHB. It is equipped with a side-shift positioner for shifting the load to the right or left. It is a battery operated forklift truck with the following features:

Lifting capacity .....5,700 lb at 24 in. load center

Lift height (maximum) .....108 in.

Fork size .....48 in. long x 5 in. wide x 2 in. thick

Fork spacing .....34 in. (centerline to centerline)
Fork positioner (optional) .....5 to 33 in. (center to center)
Side-shifter (optional) .....± 5 in. (L to R)

Weight with battery (maximum) .....13,500 lb

All components located in the hydraulic compartment are designed to operate at a low temperature. All sources of ignition are separated from combustibles. Batteries are separated from hydraulic components. Forklift battery terminals are covered to protect them from electrical shorting by falling objects. These characteristics are credited in the DSA. The battery-powered CH WASTE HANDLING EQUIPMENT is designed and maintained with their cables and connections insulated or protected to prevent electrical shorting and to operate at a low temperature which reduces the frequency of the equipment to initiate fires. **[TSR DF 6.7]**

3.5.1.6 Adjustable Center of Gravity Lift Fixture (ACGLF)

There are several identical ACGLFs on site, which will allow keeping an operating unit on each TRUDOCK crane at all times. The ACGLFs are used with a TRUDOCK crane to lift the OCV and ICV lids, an empty ICV, or the waste containers consisting of seven-packs, SWBs, four-packs, three packs, and TDOPs out of the TRUPACT-IIs and HalfPACTs. The ACGLF has a lift capacity of 10,000 lb and weighs approximately 2,500 lb. See Figure WH I-II-5 for side view of ACGLF.

Each ACGLF consists of the following parts:

- A lower strongback assembly (carbon steel lifting beam structure) has three revolving joints 120 degrees apart to which are attached the lifting legs.

- Three linear actuators mounted on the underside of the lower strongback that provide the linear motion for each of the lifting leg revolving mechanisms to connect the lifting legs to the load.

- A circular upper plate assembly on which are mounted two rotating weights to balance the load being lifted. The rotating weights are attached to two counter-rotating ring gears which are independently driven by gear motors.

- Two 1/4-HP, 115-volt, single-phase gear motors to drive the counter-rotating ring gears that position the rotating weights around the circumference of the upper plate assembly to balance the load.

- Three short lifting legs to lift the OCV and ICV lids, empty ICV, SWBs (when lifted with an SWB lift fixture adapter), or one TDOP (when lifted with a TDOP lift fixture adapter) and three long lifting legs used to lift a 14-drum payload pallet. The bottom of the lifting legs are designed to engage a horizontal lifting bar in the lifting pockets of the OCV and ICV lids, SWB lift fixture adapter, TDOP lift fixture adapter and drum shipping pallet when the lifting leg is rotated into position by its linear actuator. The four-pack lift fixture is mounted directly to the ACGLF using 3 pins and lifts four-packs up to two high.

- Two tilt sensors mounted on the top of the upper plate assembly at 90 degrees to each other to provide X and Y axis tilt indication from the horizontal plane of the ACGLF.

- Two balance weight position sensors (encoder type) to continuously provide the position of each of the two rotating weights.

- A single point lifting shackle in the center of the ACGLF for attachment to the crane.

- One control console (portable with 4 wheels) providing operator controls and indication to monitor the balance condition of the load and to compensate, if necessary, for load imbalance by repositioning the two rotatable weights.

3.5.1.7 SWB Lift Fixture Adapter

The SWB lift fixture adapter is used when lifting one SWB or two SWBs strapped together. Figure WH I-II-6 shows the SWB lift fixture adapter.

The SWB lift fixture adapter is a tubular steel frame with three latch assemblies for attaching directly to the lifting lugs of the SWB. Three lifting pockets are provided on the top of the SWB lift fixture adapter assembly for engaging the ACGLF legs or, when appropriate, the non-adjustable center-of-gravity lift fixture legs.

An overhead crane, normally one of the TRUDOCK cranes, is used to raise and lower the ACGLF with the SWB lift fixture adapter and its load. The SWB lift fixture adapter has a rated lifting capacity of 7,500 lb and a weight of approximately 350 lb. Figure WH I-II-6 shows the SWB lift fixture adapter.

3.5.1.8 TDOP Lift Fixture Adapter

The TDOP lift fixture adapter is a tubular steel frame with three latch assemblies for attaching directly to the lifting clips of the TDOP. Three lifting pockets are provided on the top of the TDOP lift fixture adapter assembly for engaging the ACGLF or non-ACGLF legs.

An overhead crane, normally one of the TRUDOCK cranes, is used to raise and lower the ACGLF with the TDOP lift fixture and its load. The TDOP lift fixture adapter has a rated lifting capacity of 7,000 lb and a weight of 300 lb (TDOP maximum gross weight is 7,000 lb). Figure WH I-II-7 shows the TDOP lift fixture adapter.

3.5.1.9 Four-Pack Lift Fixtures

Four-pack lift fixtures are provided in the CH Bay of the WHB. They are used with a TRUDOCK crane to lift the 4-pack drum arrangement out of the TRUPACT-II. The 4-pack lift fixture has a lift capacity of 10,000 lb. and weighs approximately 800 lb. See Figure WH I-II-19.

3.5.1.10 SWB Forklift Fixture

One SWB forklift fixture is provided in the CH Bay area of the WHB to lift and move SWBs with a 6-ton battery-powered forklift truck. Figure WH I-II-16

shows the configuration of the SWB forklift fixture. The fixture has a lifting capacity of 4,000 lb maximum and a gross weight of 360 lb.

3.5.1.11 TDOP Upender

An upender is provided to support the recovery of a damaged SWB. The overpack container for a SWB is a TDOP. The TDOP must be in the horizontal position to allow a forklift to insert the SWB. The TDOP must then be returned to vertical to bolt on the TDOP lid. The TDOP Upender provides a rotation of 90 degrees through the use of a mechanical chain and double reduction gear driven by an electric motor.

The upender has a rated maximum capacity of 8,000 lb and a gross weight of 5,920 lb. Based on commercial industrial equipment commonly used to rotate large rolls of sheet metal or paper, the upender has been modified with a table sized to accommodate the TDOP. The table has a urethane coated Vee block and tie down straps to prevent a TDOP from rolling while being transported on the upender. The upender is bolted to a CH facility pallet prior to use to provide for stability and to allow transporting with a 13-ton forklift on the surface, an underground transporter, or the 20-ton forklift (system WH03) underground.

A 480-VAC power source is required for upender operation. The power cord is equipped with a special four-pole plug that requires the use of a matching receptacle that is interlocked to a local breaker allowing the plug to be inserted or removed only when the breaker is open. The electrical system meets WIPP underground and surface electrical requirements. An amber warning beacon and horn mounted on the control enclosure activates 5 to 10 seconds prior to movement of the cradle. End of travel limit switches automatically stop the cradle in either the full-up or full-down positions. Overtravel limit switches, and hard mechanical stops prevent the cradle from rotation significantly beyond the full up or full down positions.

3.5.2 TRUDOCK Stations Equipment

3.5.2.1 TRUDOCKs

There are two TRUDOCK staging stations in the CH Bay of the WHB where TRUPACT-IIs can be opened, unloaded, cleaned, and reassembled for shipment offsite. Each TRUDOCK has two TRUPACT-II support stands (work station positions) with each having the capability to handle and process a TRUPACT-II. HalfPACT support stands are provided for processing of HalfPACTs and are stored in specified locations when not used.

The TRUDOCKs are made of structural steel with aluminum work platforms. Each TRUDOCK is 42 ft long and 16 ft, 6 in. wide. The unloading platform surface, where the work is done, is 56 in. above the CH Bay floor. A stairway is provided for access to the platform, and the perimeter is equipped with a

guardrail. The guardrail has gate type sections to allow placement of a TRUPACT-II or HalfPACT in the work stations. The two TRUDOCKs, two HalfPACTs, or one of each type package sit parallel to each other approximately 28 ft apart. See Figure G-1. The TRUDOCK-east unloading platform and the TRUDOCK-west unloading platform are mirror images of each other with identical equipment.

All perimeter columns of each TRUDOCK are anchored to the floor by bolts. All TRUDOCK column bases are sealed with a silicone compound to prevent waste penetration in case of a spill and to provide a smooth surface to facilitate cleanup activity following a spill.

Each TRUDOCK has two 9-foot-diameter openings (work stations) in their platforms with a removable cover floor plate. There are two floor plate gates in the platform for each work station that rotate up, by individual electrical actuators, to permit a forklift truck to place a HalfPACT or a TRUPACT-II into the work station support stand. When the gates are down, the gate plates form part of the platform working deck. The controls for raising and lowering the gates are located at each work station.

The TRUDOCK stations include and are supported by the equipment described below:

3.5.2.2 HalfPACT and TRUPACT-II Support Stands

Each individual TRUDOCK work station is provided with a TRUPACT-II support stand that sits on the floor. The four TRUPACT-II support stands and two HalfPACT support stands are made of 4-in. tubular steel with a 3/8-in. wall thickness. The corner legs of the TRUPACT-II support stands are adjustable to set the support stand platform surface 12.25 to 21.25 in. above the floor. The HalfPACT support stands have a fixed height of approximately 30 inches and mount on top of the TRUPACT-II support stands. The adjustments to the TRUPACT-II support stands can be made in 1.5-in. steps and the selected position is fixed by using a 3/4-in. diameter pin in each leg. A grounding strap is used to ground the support stand and TRUPACT-II to the TRUDOCK structure. A similar means is used when the HalfPACT stand is employed.

3.5.2.3 TRUDOCK 6-Ton Capacity Cranes

Each TRUDOCK is serviced by two 6-ton capacity overhead cranes that are used to transfer the TRUPACT-II OCV and ICV lids to their individual support stands and the payload waste containers to the facility pallet.

The TRUDOCK cranes are designed to lift loads associated with TRUPACT II and HalfPACT shipping containers and hold their load during loss of power. **[TSR DF 6.4]**

Radio Frequency (RF) control systems are provided for operational efficiency. The cranes are identical having a single girder, underhung bridge, trolley, and wire rope hoist with the following drive motor ratings and operating speeds:

DRIVE	RATING HP	OPERATING SPEED RPM	FPM	TRAVEL
Hoist	7	1,800	19	20 ft
Trolley	½	1,800	50	26 ft
Bridge	1	1,800	50	47 ft, 4 in.

Each crane is controlled by its RF transmitter or a backup individual pendant control.

3.5.2.4 TRUDOCK Vent Hood Systems

Each TRUDOCK has two vent hood systems, one for each work station, to contain the atmosphere in which the HalfPACT and TRUPACT-II ICVs are opened and to ensure that any radioactive contamination is controlled. If there is any radioactive contamination, it would be contained within the vent hood system and drawn through an industrial grade HEPA prefilter which is located just under the dock surface. From there, the effluent is directly discharged into the WHB controlled exhaust system which provides a second, nuclear grade, HEPA filtration (HV01). Figure WH I-II-9 shows the functional schematic of the vent system.

Each vent hood system consists of components in the following subsections.

3.5.2.4.1 Vent Hood Containment Chambers

The vent hood containment chamber is a wrap-around flexible sheet plastic sheath. An axially oriented full length Velcro fastener is provided for assembly/disassembly purposes. Top and bottom ends are open and include a bungee tie-cord to conform with the respective mating surfaces of either the TRUPACT-II or HalfPACT.

The top end interfaces with the TRUPACT-II/HalfPACT ICV lid; the bottom end interfaces with the TRUPACT-II/HalfPACT OCV outer surface. The vent hood is placed to hang from the lip riser on the top of the TRUPACT-II/HalfPACT ICV lid and over the OCV as the ICV lid is being removed and raised. Multiple access ports (with closure flaps) are provided in the vent hood containment chamber to allow personnel access to the TRUPACT-II/HalfPACT assembly. As demonstrated by smoke testing, there is no outflow through the access ports with the exhaust fan operating and, if opened, the access ports function as additional flow inlets to the chamber.

An attached flexible hose assembly conveys the effluent from the vent hood containment chamber to the TRUDOCK station exhaust system entry port on the top of the TRUDOCK platform. See Figure WH I-II-9 for a schematic of the TRUDOCK exhaust system including the prefilters, under-dock ductwork, exhaust fan, and vertical-run ductwork that connects to the overhead HV00 exhaust system. The vent hood is removed when radiation surveys establish there is no radioactive contamination. See Figure WH I-II-17.

3.5.2.4.2 Prefilters

The prefilter is an industrial grade HEPA filter. It is in a metal box with cylindrical ends to which the inlet and outlet flexible hose connections are made. To replace a prefilter, the complete metal box assembly with the prefilter and attached differential pressure gage is removed and disposed of as a unit.

There are two prefilter assemblies for each TRUDOCK, one for each work station. The outlet of each prefilter assembly is connected by ductwork to the TRUDOCK exhaust fan inlet.

A differential pressure gauge is connected across the industrial grade HEPA filter. The differential pressure across the inlet and outlet of a new HEPA filter assembly should be above 1.25 in. of water gauge.

3.5.2.4.3 Exhaust Fans

There is one exhaust fan for each TRUDOCK. The exhaust fan inlet is connected by ductwork to the outlet of each of the two HEPA filter assemblies. The fan then discharges its outlet air through vertical ductwork into the WHB overhead exhaust ducts of system HV00.

The TRUDOCK exhaust fan has a 6-in. inlet and a 5-in. vertical outlet. It is driven by a 1-HP, 3,600-RPM motor. The fan has shaft seals and an inlet gate damper that is manually adjustable to control total air flow.

3.5.2.4.4 Exhaust Fan Controllers

There are two TRUDOCK exhaust fan controllers (one for each TRUDOCK). Each controller consists of a motor starter and control circuits. The motor starter and control for starting and stopping the exhaust fan is installed in a panel that is mounted on the TRUDOCK railing for operation from the TRUDOCK platform deck.

3.5.2.4.5 Ductwork

Each TRUDOCK includes a ductwork system which connects the outlet of each of the prefilter assemblies to the exhaust fan. The ductwork starts with a flexible 90-degree elbow at the bottom of each of the two prefilter

assemblies, runs to a low pressure manually operated butterfly type damper that can be used to regulate and balance the air flow through the two prefilters (one for each work station), and continues underneath the TRUDOCK to a "Y" connection where the ductwork from the two work stations join. From there, the ductwork runs across the TRUDOCK to the exhaust fan inlet gate damper. Vertical ducting then takes the outlet air from the exhaust fan to the overhead exhaust duct of system HV01 from where it goes to the WHB HEPA filters.

3.5.2.5 Vacuum Systems

There are four vacuum systems. Each TRUDOCK has two vacuum systems, one for each work station.

The vacuum system is used to evacuate the TRUPACT-II/HalfPACT OCV and ICV in order to pull the outer and inner lids downward to reduce the vessel lid-to-body locking ring rotating friction so that the locking ring can be rotated manually to unlock the lid. This is done when the vessel lid and body flanges are to be secured together or when removing the vessel lid. Figure WH I-II-9 shows a functional schematic of the vacuum system.

The vacuum system inlet is connected by flexible tubing using quick disconnect fittings to the appropriate TRUPACT-II/HalfPACT ICV or OCV vent port tool (OCV vent plug removal/pressure relief tool or ICV particulate sampling tool described in Sections 3.5.4.7.2 and 3.5.4.7.3 respectively, Chapter 1, WH01). A radiation assessment filter is used only when evacuating or venting the TRUPACT-II/HalfPACT ICV.

3.5.2.5.1 Vacuum Pumps

Each work station is equipped with an oil-less rotary vacuum pump located under the TRUDOCK and driven by a 2-HP, 440-volt, three-phase, 60-Hz, 1,800-RPM motor. The pump is capable of developing a vacuum of 18 to 22 in. Hg. The vacuum pump discharges directly into the TRUDOCK exhaust system duct upstream of the exhaust fan. See Figure WH I-II-9.

3.5.2.5.2 Radiation Assessment Filters

The radiation assessment filter (RAF) is a 47-mm-diameter, 3-micron, supported membrane unit.

The filter housing is a commercially available unit, as are the quick-disconnect fittings which attach it to the ICV vent port tool and to the flexible tubing of the vacuum system. Taped and threaded joints are deemed adequate, since any potential leakage is into the vacuum system during use. Figure WH I-II-18 shows the radiation assessment filter assembly.

3.5.2.6 TRUDOCK Trainer and Simulator

There is a TRUDOCK Trainer and Simulator (TTS) in the TRUPACT-II Maintenance Facility (TMF) where Training TRUPACT-IIs can be opened, unloaded, cleaned, and reassembled. The TTS shall only be used for training and simulation purposes. The TTS has one TRUPACT-II support stand (work station position) with equipment similar to the TRUDOCKs in the CH Bay. The TTS provides a place away from the actual waste processing area for training of personnel, and simulations to aid operation or maintenance related activities.

The TTS structure, work platform, and support equipment is similar to the CH Bay TRUDOCKs. The TTS is provided with equipment to support the training simulation process.

The TTS includes a Vacuum System which consists of the Vacuum Pump, and TRUPACT-II tools. The existing TMF overhead crane is used with a standard ACGLF to remove the TRUPACT-II lids and simulated loads.

3.5.3 Underground Equipment

3.5.3.1 Underground Facility Pallet Platform

One underground facility pallet platform is provided. The platform is a structural steel framework used to support facility pallets while SWBs are unloaded from the ends of the pallets. The change to use slipsheets under the SWBs eliminated the need for this item. However, it is being retained as a back up tool should there be a slip sheet failure and as a training aid. The platform will simulate the waste hoist and allow operators to practice loading and unloading the facility pallet from the underground transporter without removing the waste hoist from service. In addition, the platform provides a staging stand for assembly of multiple pallet arrangements to support greater efficiency in the uploading of pallets and minimize impacts on other support systems.

3.5.3.2 Underground Transporters (52-H-008A &B)

There are two underground transporters with a screw drive pallet transfer mechanism. The underground transporters are four wheel drive, diesel-powered tractor trailer with an articulating frame steering system. Figure WH I-II-10 provides a pictorial type view of the transporter tractor and trailer with a detailed side view of the hook pallet mover assembly including ball nut and screw.

The underground transporters have two sections, a front section consisting of the tractor cab and diesel engine and the rear section consisting of a flat bed trailer with a ball screw driven pallet transfer system mounted in the middle of the bed. The pallet transfer system is designed to handle a load of 28,000 lb.

The underground transporters have a hydraulic power steering system, air-over-hydraulic disc brakes with a dual master cylinder and separate braking circuits for the front and rear axles. There is also a manually applied parking brake which operates on the drive lines; this brake is automatically applied if the air pressure falls below 45 psi.

The UNDERGROUND liquid-fueled vehicles (underground transporters) SHALL be designed to prevent and/or mitigate fires. The design includes fuel tanks and fuel delivery systems within the metal body of the vehicle, metal hydraulic fluid reservoirs, and reinforced hydraulic delivery systems. In addition, UNDERGROUND WASTE HANDLING EQUIPMENT contains hydraulic fluid with high ignition temperatures. **[TSR DF 6.6]**

The underground transporters have an automatic/manual fire-suppression system. **[TSR LCO 3.1.2]** A description of this system is provided in Section 2.2.3.1.

The flat bed trailer pallet mover system is powered by a ball screw drive mechanism. The roller guided pallet mover with hook is screw driven by a full length ball drive. After the hook is engaged to the facility pallet pin, operation of the ball screw is controlled from a switch in the tractor cab to rotate the ball screw. This advances the ball nut and hook to the front of the trailer sliding the facility pallet from the waste shaft conveyance on to the transporter trailer. The underground transporter is then ready to move the facility pallet to an underground storage room or the facility pallet platform.

Each Shift, liquid-fueled vehicles/equipment (underground transporters) selected for use for Waste handling are verified to have no excessive leaks (i.e., battery compartment, hydraulic lines, fuel lines), as indicated by visible flow of fluid under pressure, puddles beneath the equipment, or abnormal loss of hydraulic fluid, proper fluid levels (i.e., engine oil, transmission fluid, hydraulic fluid, and brake fluid), and lights and horn are IN-SERVICE using the following procedure: **[TSR SAC 5.1.1.2]**

- WP 05-WH1603, CH TRU Underground Transporter, 52-H-008A, B, & C

3.5.3.3 Underground Transporter (52-H-008C)

There is one underground transporter with a chain drive pallet transfer mechanism that is a four wheel drive, articulating frame steering vehicle powered by a diesel engine. It has two sections, a front section consisting of the tractor cab, engine, and the controls and instrumentation necessary for operation of the vehicle, and a rear flatbed section where the mechanical pallet transfer system is installed.

The tractor section steering is full hydraulic power type utilizing a direct drive hydraulic gear pump operating the two steering cylinders located in the articulation joint. The service brakes (axle brakes) for both sections are fully enclosed wet disk type, with a dual system, permitting separate circuitry for front and rear brakes. Should a failure occur in either circuit, the other circuit remains functional. All the instruments required to operate the vehicle are located in the operator's area.

The UNDERGROUND liquid-fueled vehicles (underground transporters) SHALL be designed to prevent and/or mitigate fires. The design includes fuel tanks and fuel delivery systems within the metal body of the vehicle, metal hydraulic fluid reservoirs and reinforced hydraulic delivery system. In addition, UNDERGROUND WASTE HANDLING EQUIPMENT contains hydraulic fluid with high ignition temperatures. **[TSR DF 6.6]**

The pallet transfer system consists of a pallet pusher frame, pallet hook, and three chains providing the motive force to transfer the pallets on and off the transporter. The chain consists of 3 separate 4-3/4 in. ANSI standard 2 in. pitch chains, 96 feet long. The chain set has a minimum ultimate strength of 100,000 lb resulting in a factor of safety of a minimum of 5:1 for a facility pallet fully loaded with CH waste. The transporter flatbed is rated for a capacity of 23,130 lb.

The underground transporter has an automatic/manual fire-suppression system. **[TSR LCO 3.1.2]** A description of this system is provided in Section 2.2.3.1.

Each Shift, liquid-fueled vehicles/equipment (underground transporters) selected for use for Waste handling are verified to have no excessive leaks (i.e., battery compartment, hydraulic lines, fuel lines), as indicated by visible flow of fluid under pressure, puddles beneath the equipment, or abnormal loss of hydraulic fluid, proper fluid levels (i.e., engine oil, transmission fluid, hydraulic fluid, and brake fluid), and lights and horn are IN-SERVICE using the following procedure: **[TSR SAC 5.1.1.2]**

- WP 05-WH1603, CH TRU Underground Transporter, 52-H-008A, B, & C

3.5.3.4 6-Ton Capacity Forklift

There is one 6-ton capacity forklift in the underground. This forklift is a standard battery powered forklift which is identical to the 6-ton forklift used in the CH Bay of the WHB described in Section 3.5.1.4.

3.5.3.5 Push-Pull Attachments

There are four sets of push-pull attachments. The push-pull attachment is either picked up by or replaces the forks on the front carriage of a 6-ton

forklift, and is used to handle containers and supersacks on slipsheets. In normal waste emplacement operations the push-pull attachment is extended to grip the edge of the slip sheet under the waste package (three, four, or seven-pack, SWB or TDOP) and pulls the load onto the platen for transport. When the destination is reached, the platen is positioned for unloading, the gripper releases the slipsheet, and the mechanism pushes the slip sheet and the waste package into position. Backfill super sacks (weighing less than 4,300 lb), are picked up, transported to the top of a waste package and placed on top of the waste package in a similar manner. In these instances, the push-pull attachment is then used to emplace the waste package/super sack combination as described above. Push-pull attachments are available 7,500 and 8500 lbs. capacities. Figures WH I-II-11 and WH I-II-15 show the push-pull attachment configuration.

There are CH Payload Recovery Bar(s) in the underground. This Recovery Bar is used to facilitate removal of SWBs and TDOPs from the facility pallet if a fiberboard slip sheet tab fails. A synthetic web sling is placed around the payload and attached to the Recovery Bar via two shackles with a minimum rating of 3.25 tons. The synthetic web sling shall have a minimum load rating of 3.5 tons.

3.5.3.6 Forklift (6-ton capacity)

There are two 6-ton capacity diesel powered forklifts in the underground, which are equipped with push-pull attachments mounted on the forks. These forklifts are used to emplace waste container packages or backfill super sacks; if required for other tasks, the attachment can be removed. The fuel tanks are rupture-resistant, or the tack is located such that the tank is unlikely to be damaged in a forklift collision to minimize the potential for a fire involving the fuel system.

The UNDERGROUND liquid-fueled vehicles (underground transporters) SHALL be designed to prevent and/or mitigate fires. The design includes fuel tanks and fuel delivery systems within the metal body of the vehicle, metal hydraulic fluid reservoirs and reinforced hydraulic delivery system. In addition, UNDERGROUND WASTE HANDLING EQUIPMENT contains hydraulic fluid with high ignition temperatures. **[TSR DF 6.6]**

Capacity (maximum) .....15,500 lb at 24-in. load center
Lift height (maximum) .....157 in.
Fork size (nominal) .....2.7 in. x 6 in. x 60 in.
Forklift truck weight (nominal).....21,000 lb

The forklift has automatic/manual fire-suppression capability.
[TSR LCO 3.1.2] A description of this system is provided in Section 2.2.3.1.

Each Shift, liquid-fueled vehicles/equipment (underground transporters) selected for use for Waste handling are verified to have no excessive leaks

(i.e., battery compartment, hydraulic lines, fuel lines), as indicated by visible flow of fluid under pressure, puddles beneath the equipment, or abnormal loss of hydraulic fluid, proper fluid levels (i.e., engine oil, transmission fluid, hydraulic fluid, and brake fluid), and lights and horn are IN-SERVICE using the following procedure: **[TSR SAC 5.1.1.2]**

- WP 05-WH1412, CH Waste Handling Toyota Forklifts

3.5.3.7 Forklift (7.5-ton capacity)

One 7.5-ton capacity diesel powered forklift is available in the underground, equipped with the capability to mount push-pull attachments on the forks. This forklift is equipped with a "System of Active Stability" including an active control rear stabilizer, automatic fork leveling control, and active mast front tilt angle control. This forklift is used to emplace waste container packages or backfill super sacks; if required for other tasks, the attachment can be removed. The fuel tank is rupture-resistant, or the tank is located such that the tank is unlikely to be damaged in a forklift collision to minimize the potential for a fire involving the fuel system.

The UNDERGROUND liquid-fueled vehicles (underground transporters) SHALL be designed to prevent and/or mitigate fires. The design includes fuel tanks and fuel delivery systems within the metal body of the vehicle, metal hydraulic fluid reservoirs and reinforced hydraulic delivery system. In addition, UNDERGROUND WASTE HANDLING EQUIPMENT contains hydraulic fluid with high ignition temperatures. **[TSR DF 6.6]**

Capacity (maximum) .....15,000 lb at 24 in. load center
Lift height (maximum) .....121 in.
Fork size (nominal) .....2 in. x 6 in. x 48/60 in.
Forklift truck weight (nominal).....22,550 lb

The capacity and load center ratings will provide support for the push-pull attachment rating of 8.500 lb at 36 in. load center.

The forklift has automatic/manual fire-suppression capability.
[TSR LCO 3.1.2] A description of this system is provided in Section 2.2.3.1.

Each Shift, liquid-fueled vehicles/equipment (underground transporters) selected for use for Waste handling are verified to have no excessive leaks (i.e., battery compartment, hydraulic lines, fuel lines), as indicated by visible flow of fluid under pressure, puddles beneath the equipment, or abnormal loss of hydraulic fluid, proper fluid levels (i.e., engine oil, transmission fluid, hydraulic fluid, and brake fluid), and lights and horn are IN-SERVICE using the following procedure: **[TSR SAC 5.1.1.2]**

- WP 05-WH1412, CH Waste Handling Toyota Forklifts

3.6 Instrument and Control

This section describes the Instrumentation and Control (I&C) and control interlocks associated with the WH02 waste handling subsystem. A summary listing of the range, accuracy, and set points of the equipment is listed below.

INSTRUMENT	RANGE	ACCURACY	SET POINT
TRUDOCK Crane Load Cell 6-Ton	0 – 99,999 lb	± 10%	N/A
Vacuum system Pressure Indicator	-30 in. Hg to 0 in. Hg	±3%	N/A
Hood Prefilter DP Indicator	0 – 3 in. WG	± 2% FS	N/A
ACGLF Tilt Indicator	0 – 15 Deg	± 0.3 Deg	N/A
ACGLF Position Indicator	0 – 360 Deg	± 2 Deg.	N/A

Table I-II–1 provides a list of the WH02 I&C equipment items:

Table I-II-1 I&C Equipment for WH02

ACGLF
- Tilt indicators
- Leg rotation limit switches (3)

TRUDOCK 6-Ton Cranes
- Main hoist up stop limit switch
- Trolley travel stop limit switches (2)
- Bridge travel stop limit switches (2)
- Hoist load cell

TRUDOCK Crane Pendant Instrument Display
- Power on display
- Emergency stop-activated display
- Travel limit display
- Destination selected display (preprogrammed locations)
- Load/Overload display

TRUDOCK Vent Hood and Vacuum System
- Hood prefilter DP indicator
- Vacuum switch
- TRUDOCK Vacuum System Control Panel
- Vacuum-pressure indicator
- Vacuum pump status light and switch

- Roughing filter DP indicators (2) (vent & vac.)
- Transfer Vehicle
- Platform stop limit switches (2)
- End of travel limit switch

3.6.1 I&C for the Adjustable Cent of Gravity Lifting Fixture (ACGLF)

Each adjustable center of a gravity lifting fixture has a set of three internal limit switches that are used to stop the rotation of the three lifting legs after they are fully engaged or disengaged and to energize indicating lights on the ACGLF control panel. When the open or closed control circuitry is actuated the lifting arms will rotate the proper number of degrees and then stop before hitting mechanical stops.

The ACGLF balance weight drive system is powered through a torque limiting clutch that will slip if excessive torque is applied to the drive system. If the weights hit either of their stops or each other the torque limiting clutch will prevent damage to the system.

There are two weight position transmitters that indicate the position of the balancing weights on the ACGLF. The position transmitters are mounted on the ACGLF and are driven by the gearing that moves the weights.

There are two-tilt sensors that indicate the degree of levelness of the ACGLF. The readout for each tilt sensor is located on the ACGLF control console.

3.6.2 Adjustable Center of Gravity Lifting Fixture Control Console

Each ACGLF has a control console with controls and indicators as described below. The power on/off switch is an indicating type switch that is energized and red when the power is on.

There is a digital readout to indicate the position for each of the balancing weights in degrees. The position of weight #1 can be varied between 318 to 40 degrees. The position of weight #2 can be varied over the full 360 degrees.

There are three green lights and three yellow lights to indicate the position of the three locking legs of the ACGLF. When the legs are fully locked the green lights are energized. As the legs leave the fully locked position the green lights go off. When the legs are fully unlocked the yellow lights energize.

There is a digital tilt indicator for each of the two tilt sensors on the ACGLF. The readouts provide a floating decimal point that can indicate from 99 to 0.00 degrees.

There are control switches on the console to position the control weights and lock/unlock the lifting legs.

3.6.3 I&C for the TRUDOCK 6-Ton Capacity Cranes

Each 6-ton capacity cranes have standard bridge, trolley, and hoist controllers mounted on the crane bridge structure floor that are powered from the 480-volt, three-phase, 60-cycle system ED00 supply.

Each 6-ton capacity crane hoist has a limit switch that prevents the hoist from being raised too high. It is a rotary limit switch that is operated by a paddle that in turn is driven by a bar that contacts the hoist block near the top of its travel. The adjustment is obtained by moving the limit switch in its mounting.

Each 6-ton capacity trolley has limit switches to stop trolley travel at each end of the bridge tracks. The limit switches are mounted on the bridge and are actuated by cams mounted on the trolley. There is one switch mounted on each end of the bridge.

Each 6-ton capacity bridge has limit switches to stop bridge travel at each end of the support tracks. The limit switches are mounted on the bridge and are actuated by cams mounted on the support tracks. There is one switch mounted on each end of travel on the bridge crane rails. The cams that operate the bridge travel limit switches are clamped to the support rails. They can be moved to limit the range of the bridge crane travel to the length of the support rails less the width of the bridge crane for a total of approximately 40 ft.

Due to the fact that there are two cranes over each TRUDOCK and that both cranes run on a common runway, additional limit switches are mounted on the cranes. These limit switches (primary and secondary) mounted on extension arms attached to the bridges are supplied to prevent crane collisions.

There is a built in load cell on each 6-ton capacity crane. The readout is in digital form and has a range of 0 to 99,999 lb. The readout from the load cell is incorporated in the scoreboard display on the crane.

3.6.3.1 TRUDOCK 6-Ton Crane Control Points

Two control points have been provided with each crane. A radio-frequency (RF) control system and a hard-wired pendant have been supplied to provide control redundancy and minimize equipment unavailability. The cranes are designed with variable frequency drives and PLC controls. The RF transmitter (RF Control) has one multi-axis joystick to control bridge and trolley motion. A separate joystick is provided for control of the hoist. Both are multi-speed, stepless controls that provide the operator with inching capabilities. An E-stop is provided for instant de-energizing of motors and

controls. The hoist mechanical load brakes provide fail-safe load management in an operator-initiated or unexpected power loss. The hard-wired pendant (backup control) is similar and has a built-in display screen showing bridge, trolley, and hoist position.

Crane position information can be derived from either the panels located on the south wall of the CH Bay (RF control) or on the hard-wired pendant (backup control). The wheels of the bridge and trolley are subject to slip so there are automatic "update" sensors provided along the bridge rails and runway. Each "update" device generates a signal which resets the position value to a known setting when the device is operated.

3.6.4 I&C for the TRUDOCK Vent Hood System

There is one indicator that indicates the differential pressure (D/P) across the prefilter used with each vent hood system located at each TRUPACT-II work station. The function of the D/P indicators is to indicate when the filters are becoming clogged and should be changed. See Figure WH I-II-9.

3.6.5 TRUDOCK Vacuum System Panels

There are four TRUDOCK vacuum system panels, one for each work station. Each panel has a vacuum indicator, an isolation valve, and a fitting for connecting the tubing from the TRUPACT-II/HalfPACT. The vacuum indicator is to show the vacuum when rotating the TRUPACT-II/HalfPACT locking rings to remove the OCV and ICV lids.

There are four vacuum pump start-stop controllers. One is installed next to each of the vacuum system panels mounted on the TRUDOCKS. In addition to the start-stop pushbuttons, the controllers each have a green light and a red light. The green light indicates power is available to run the vacuum pump. The red light indicates the contactor is closed to energize the vacuum pump. Each controller also includes a time-delay relay which is used to ensure that the pump does not reduce the internal pressure of the TRUPACT-II/HalfPACT below the value listed in Section 2.17.8 of the CH Packaging Operations Manual. See Figure WH I-II-9 for the vacuum schematic.

3.6.6 I&C for the Transfer Vehicle

There are two limit switches associated with the transfer vehicle platform to stop its travel automatically in the elevated and lowered positions. There is one photoelectric switch to automatically stop the car at end of full travel.

3.7 System Interfaces WH02

Listed below is a summary of primary and secondary interface system requirements for the WH02 subsystem.

3.7.1 Primary Interfaces

The CH TRU waste handling system requires service from the electrical system (ED00), Effluent Monitoring (EM00), the heating and ventilation system (HV00), Radiation Monitoring (RM00), the underground hoist system (UH00), Underground Ventilation (VU00), and the plant building, facilities and miscellaneous equipment system (CF00).

3.7.1.1 ED00

Provide lighting in the WHB and the OP&RR.

Provide power to the 6-ton capacity TRUDOCK cranes.

Provide power to the TRUDOCK exhaust and vacuum systems.

Provide power for the transfer vehicle.

Provide power for the ACGLFs.

3.7.1.2 EM00

Provide effluent monitoring

3.7.1.3 HV00

Provide a HEPA filtered exhaust connection to each of the TRUDOCKS.

3.7.1.4 RM00

Provide continuous air monitoring

Provide fixed air sampling

Provide shift to filtration (underground ventilation)

3.7.1.5 UH00

Provide transportation for the waste and WH02 equipment between the surface and the underground.

3.7.1.6 VU00

Provide active emplacement room ventilation

3.7.1.7 CF00

Provide WHB space for the TRUDOCKS and support equipment.

Provide space for Room 108.

Provide crane supports for the 6-ton cranes above the TRUDOCKS.

Provide crane supports for the 7.5-ton monorail crane in Room 108.

3.7.1.8 AU00

Provide space to store the CH TRU waste underground.

Secondary Interfaces

Subsystem WH02 provides services to the packaging and transportation system (PT00).

Subsystem WH02 provides the forklifts and cranes to support loading and unloading, of the TRUPACT-II and HalfPACT containers.

4.0 OPERATION

Waste handling site operation involves the receipt, handling, and emplacement of CH TRU waste containers, and backfill containers at the WIPP site. The equipment and facilities of subsystems WH01, WH02, and WH04 are utilized to support this CH TRU waste handling activity. The site operation requires the integration of equipment from various subsystems. Therefore, the sequence of operations that must be performed for the receipt, handling, emplacement and/or retrieval of CH TRU waste at the WIPP site are presented accordingly in WIPP site controlled operating procedures. The procedures address the following types of CH TRU waste handling operations.

4.1 Normal Operations – CH TRU Waste Handling

- CH Package receipt
- CH Package unloading
- Transport and emplacement of CH TRU waste
- Emplacement of MgO backfill

4.2 Support Operation

- Preparation of empty CH Package for shipment
- Loading transportation trailer

4.3 Recovery of CH TRU Waste

4.4 Decontamination of Waste Shipping Packages and Containers

5.0 SYSTEM LIMITATIONS, SET POINTS, AND PRECAUTIONS

This section describes the operating limits, set points, alarms, interlocks, and precautions as related to operation of the waste handling system. Consideration is given to general personnel safety, equipment safety and performance, and overall system performance. The information reiterates the limits, set points, and precautions imposed either implicitly or explicitly by the system operations described in Sections 4.0, 6.0 and 7.0.

5.1 Radiation Limits

The external surface dose rate of any individual CH TRU waste container shall be no greater than 200 mrem/hr.

5.2 Operating Limits

Waste containers may be mixed in each stack. TDOP shall only be placed on the floor one high. Four packs of 85-gallon overpacks shall be stacked as described in Section 2.3.2 and Figure WH I-II-14.

CH TRU waste containers are acceptable if the containers meet the following performance criteria:

- The external loose contamination limits must be in accordance with 10 CFR Part 835.
- The external contact dose rate is equal to or less than 200 mrem/hr.
- The certified data package for the waste container meets the WIPP Waste Acceptance Criteria (WAC).

5.3 Set Points and Alarms

The TRUDOCK vent hood system HEPA prefilters should be replaced when the differential pressure builds up to 2.25 in. WG.

5.4 Interlocks

The TRUDOCK vent hood system exhaust fan cannot be turned on unless the WHB ventilation system (HV01) is operating and the TRUDOCK exhaust fan inlet gate damper is open.

WHB airlock door interlocks are defined in Subsystem CF02.

5.5 Precautions

5.5.1 Maximum container weights shall not exceed:

- 1,000 lb per 55-gallon drum
- 1.000 lb per 85-gallon drum
- 4,000 lb per SWB
- 6.700 lb per TDOP

5.5.2 A maximum of one fully loaded facility pallet shall be placed in the shielded storage room.

5.5.3 The steering on the underground transporter is not functional when the circuit selector valve is in the pallet drive position.

5.5.4 Holding the hook actuation switch in the "on" position for more than three seconds can cause damage to the underground transporter.

5.5.5 When loading or unloading a pallet on the underground transporter, decrease the pallet travel speed before reaching the end-of-travel switch. Impacting the stop at full speed will cause excessive shock and potential damage to the equipment.

5.5.6 When waste containers are placed in the underground emplacement areas, the following limitations shall be maintained.

- The drum array shall not exceed three high. Drum arrays may be infinite in the horizontal directions.

- The SWB array shall not exceed three high. Box arrays may be infinite in the horizontal directions.

- TDOPs shall only be placed on the floor one high.

- Four-packs of 85-gallon overpack drums shall be handled as identified in Section 2.3.3.

5.5.7 The support leg on the TRUDOCK Bay door shall be properly recessed when raising the door, and shall be in the vertical position when lowering the door.

5.5.8 The maximum load that shall be placed on the TDOP upender shall be 8,000 lb. Exceeding this load can cause personal injury and/or damage to other equipment.

6.0 OFF-NORMAL EVENTS AND RECOVERY

Refer to Section 6.0 of Chapter G for the off-normal events and recovery scenarios which are applicable to CH TRU waste handling operations.

7.0 MAINTENANCE

Refer to Section 7.0 of Chapter G for the maintenance requirements and approach related to waste handling subsystems.

WIPP operations controlled corrective maintenance, preventative maintenance, and in-service inspection programs apply to the following subsystem WH02 CH TRU waste handling equipment:

- Forklifts (3-ton, 4-ton, 6-ton, and 13-ton)
- Facility Pallets
- Transfer Car
- Underground Transporter
- Push-Pull Attachments
- SWB Forklift Fixture
- Adjustable Center of Gravity Lift Fixture (ACGLF)
- TRUDOCK Vent Hood System and Vacuum System
- TRUDOCK 6-Ton Cranes
- TRUPACT-II Support Stands and Underground Facility Pallet Platforms
- 7.5-Ton Monorail Crane
- TDOP Upender
- SWB Lift Fixture Adapter
- TDOP Lift Fixture Adapter
- Four-pack Lift Fixture Adapter

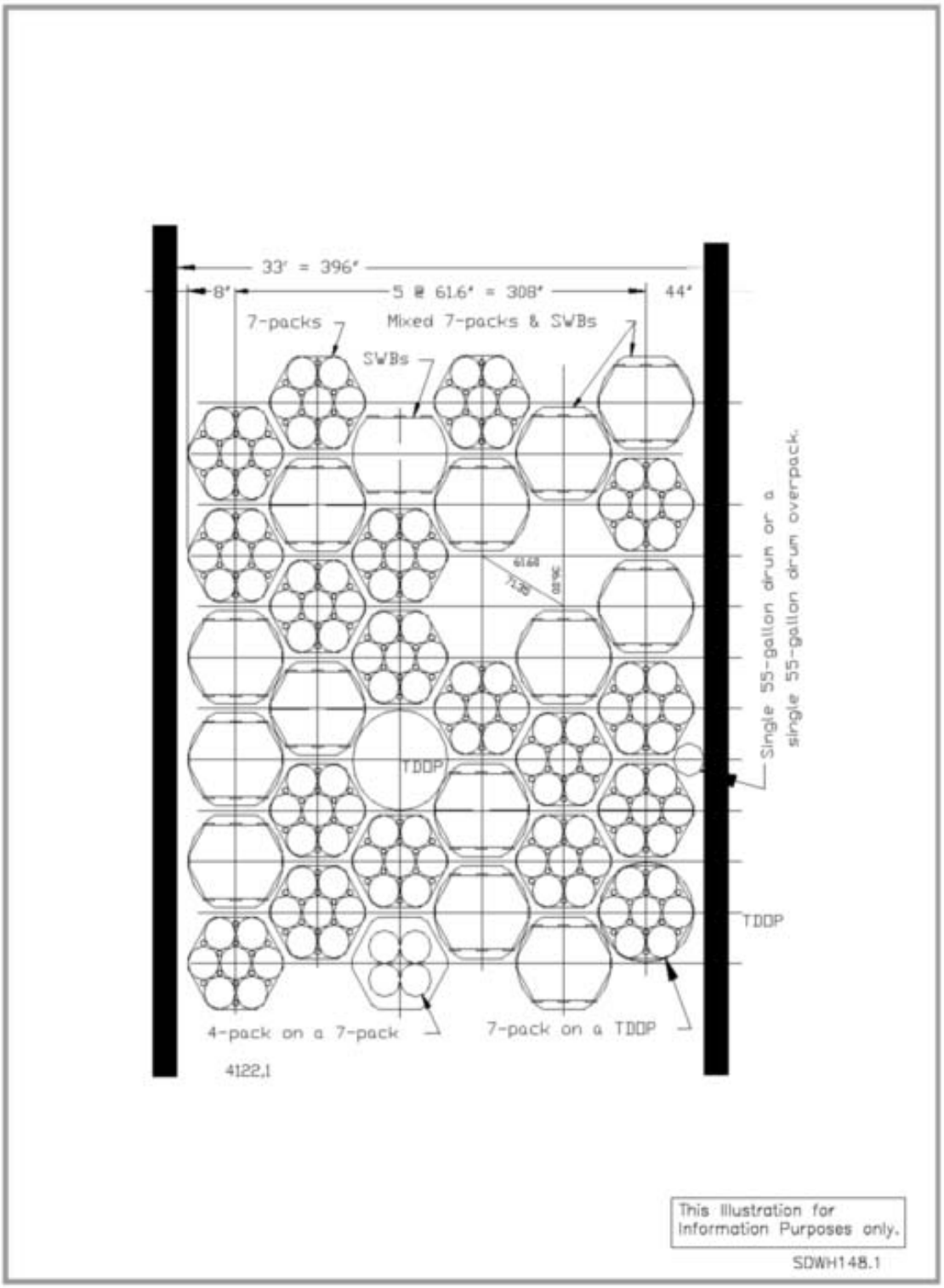

Figure WH I-II-1 – Emplacement Area Arrangement

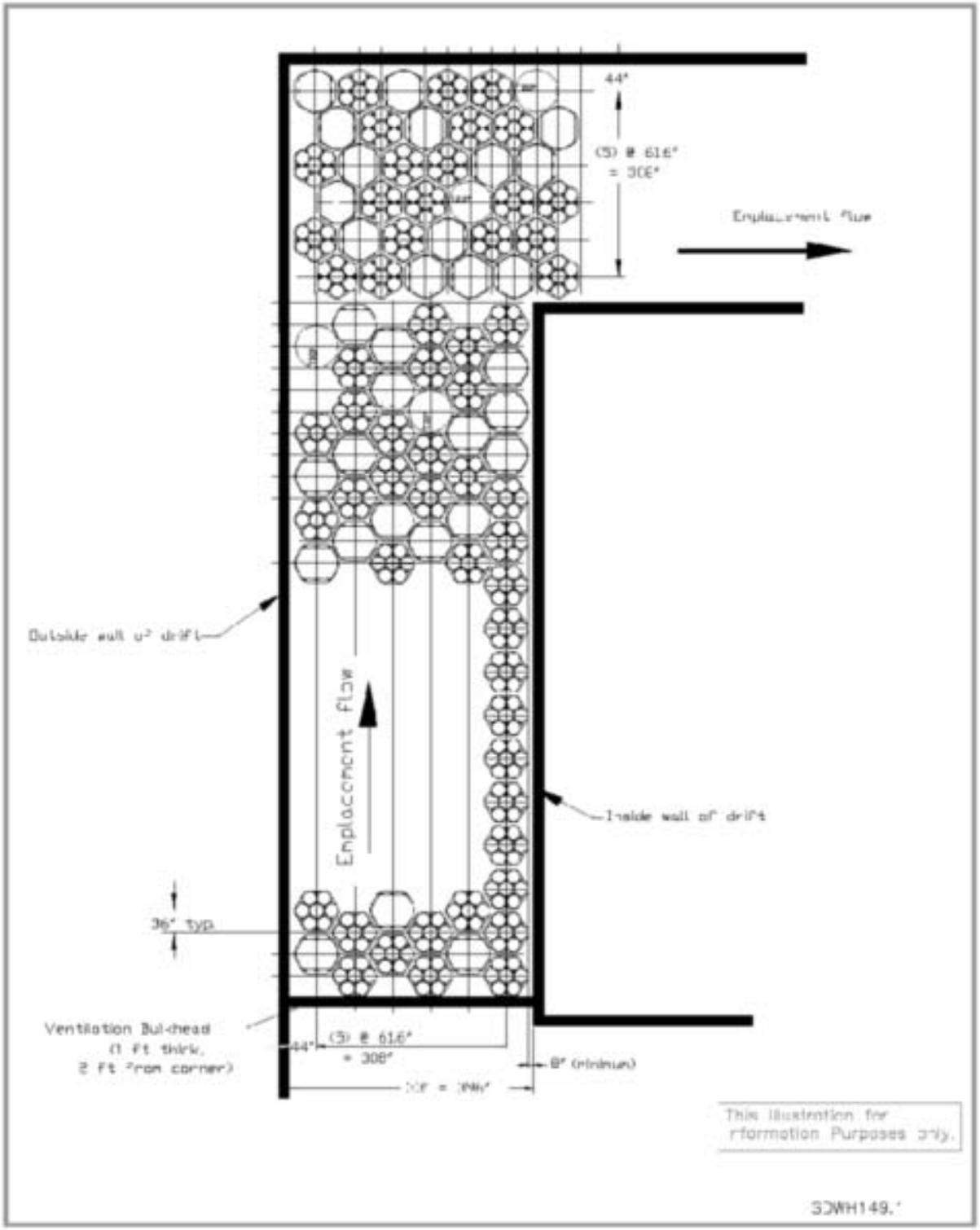

Figure WH I-II-2 – Typical Emplacement Flow

F

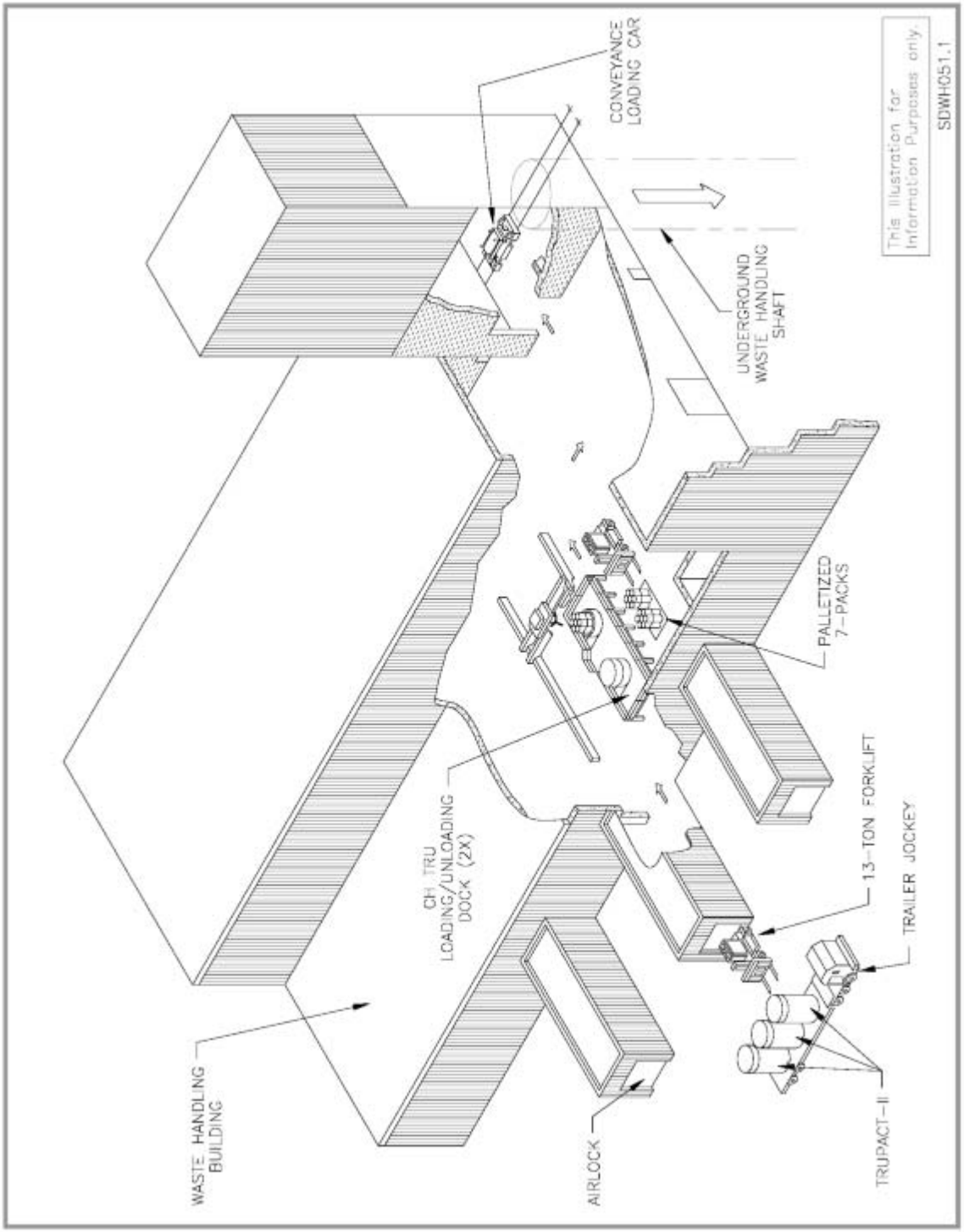

Figure WH I-II-3 – Flow of CH TRU Waste to the Underground

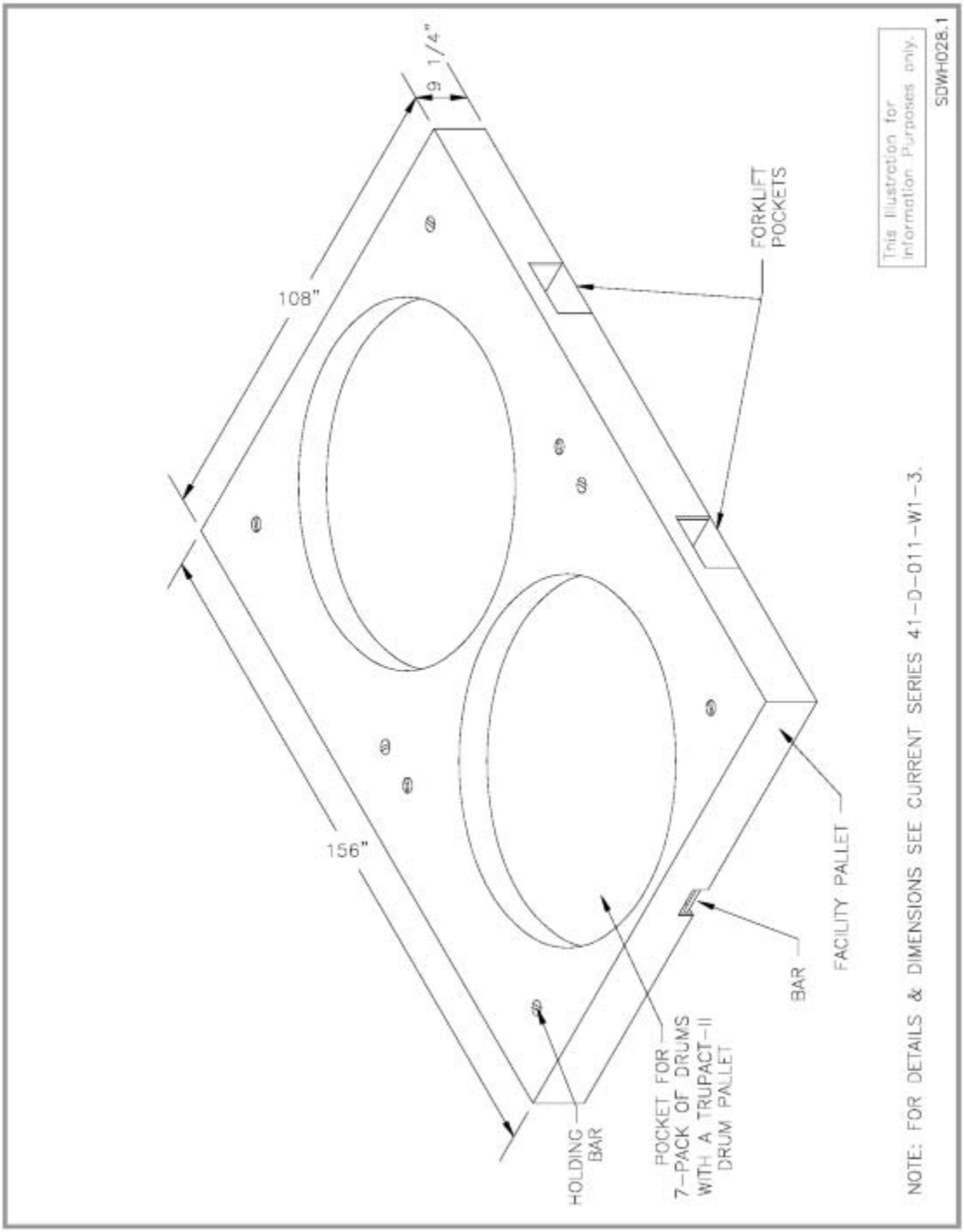

Figure WH I-II-4 – Facility Pallet

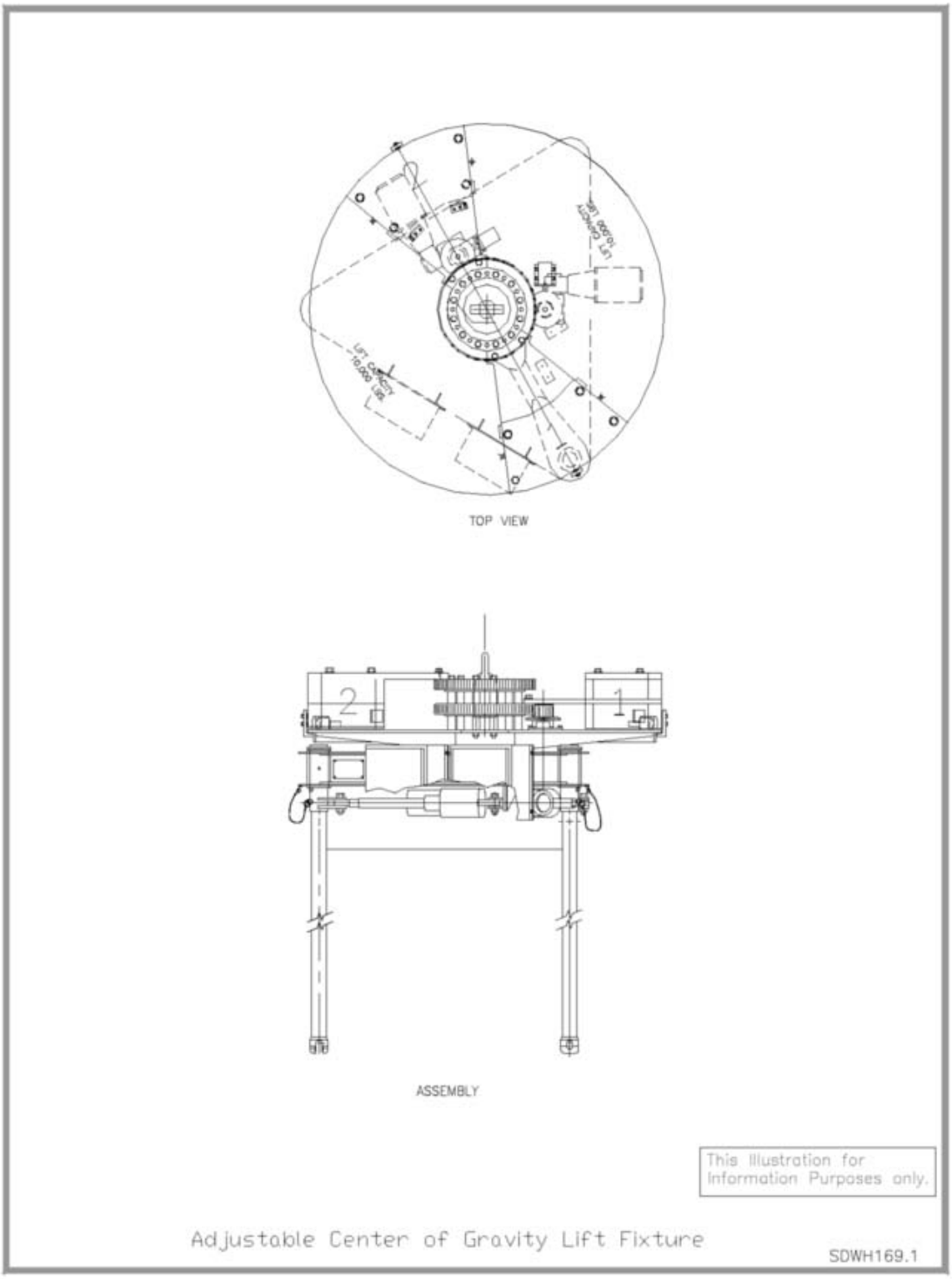

Figure WH I-II-5 – Adjustable Center-of-Gravity Lift Fixture

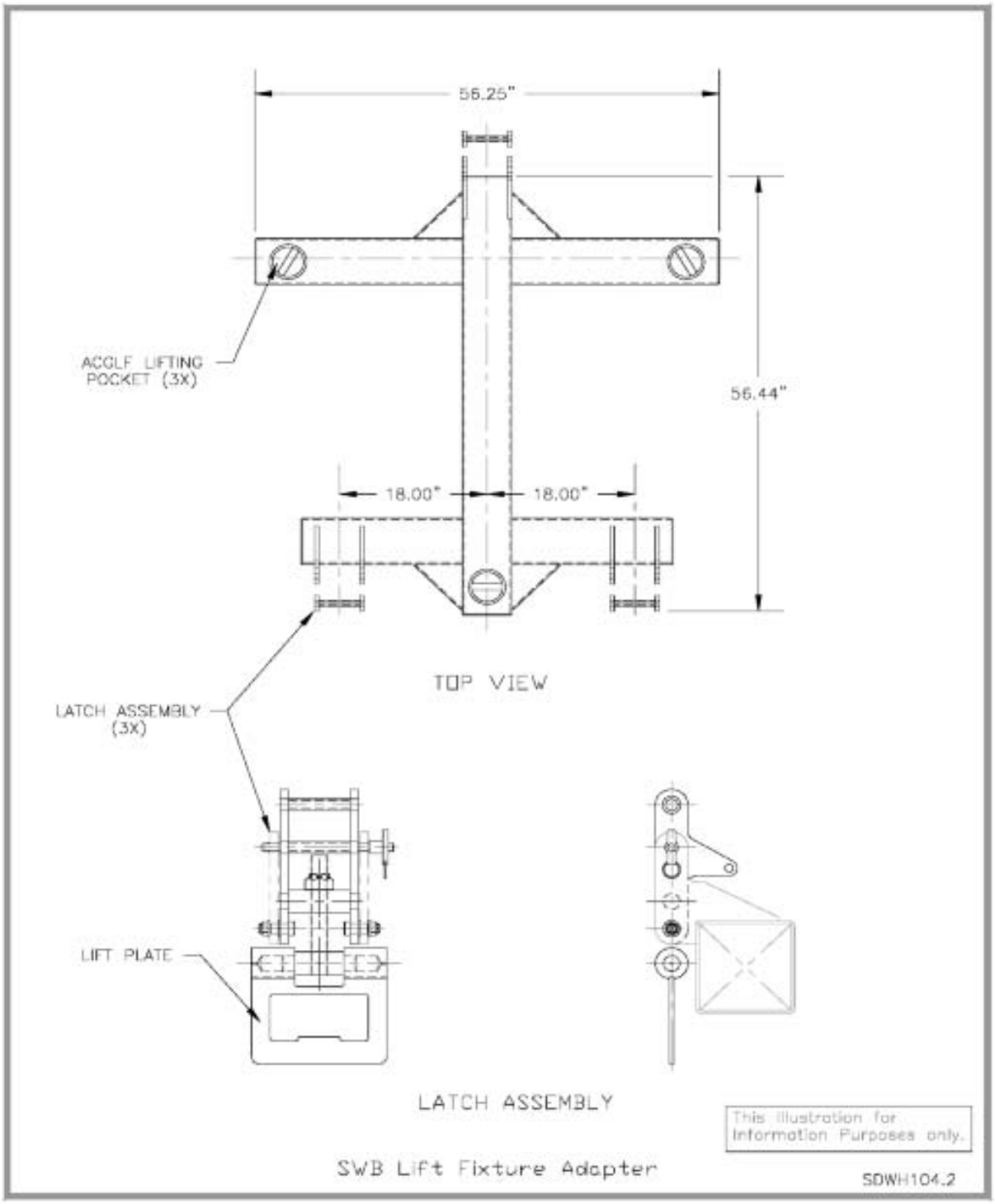

Figure WH I-II-6 – Standard Waste Box Lift Fixture Adapter

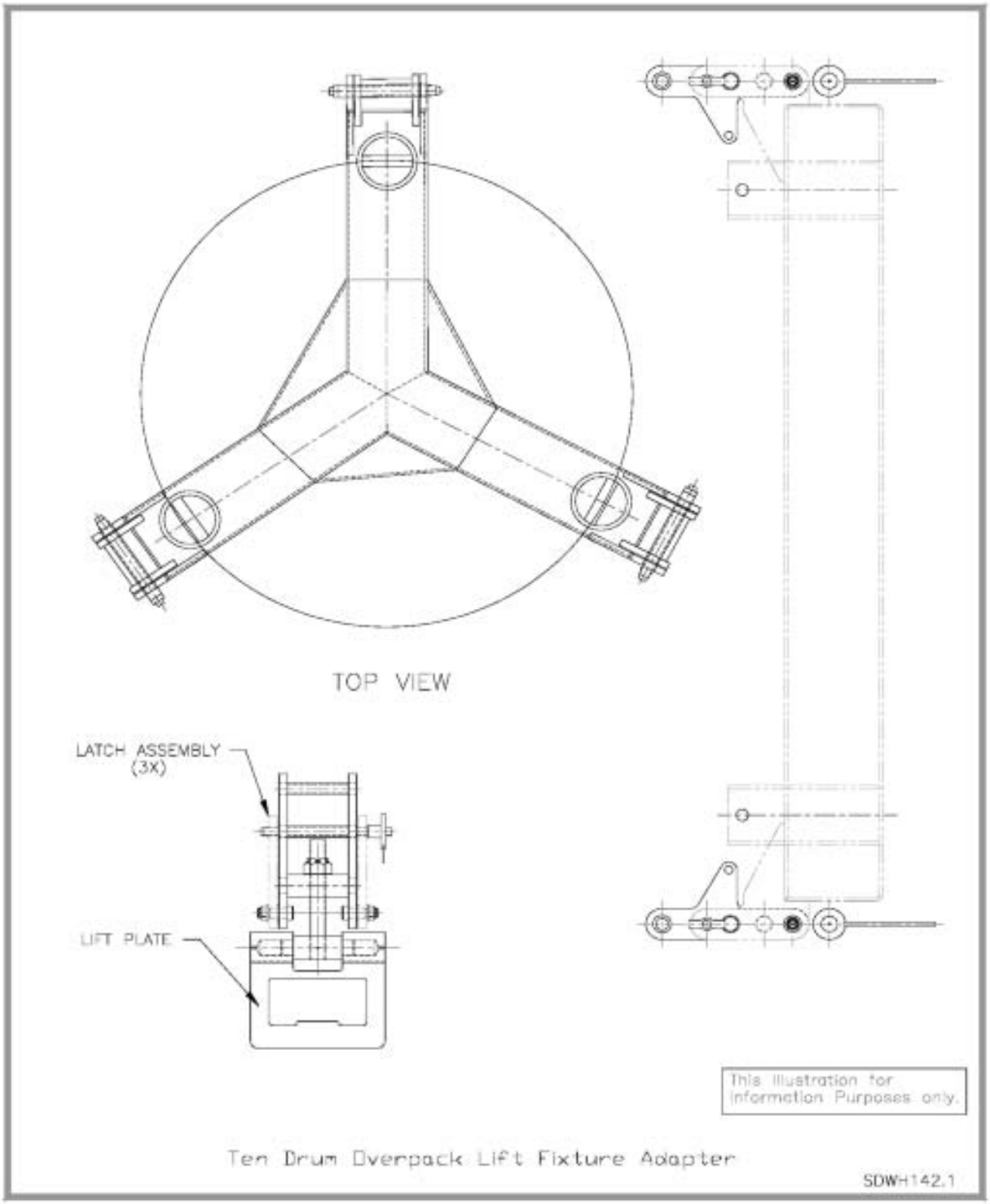

Figure WH I-II-7 – Ten-Drum Overpack Lift Fixture Adapter

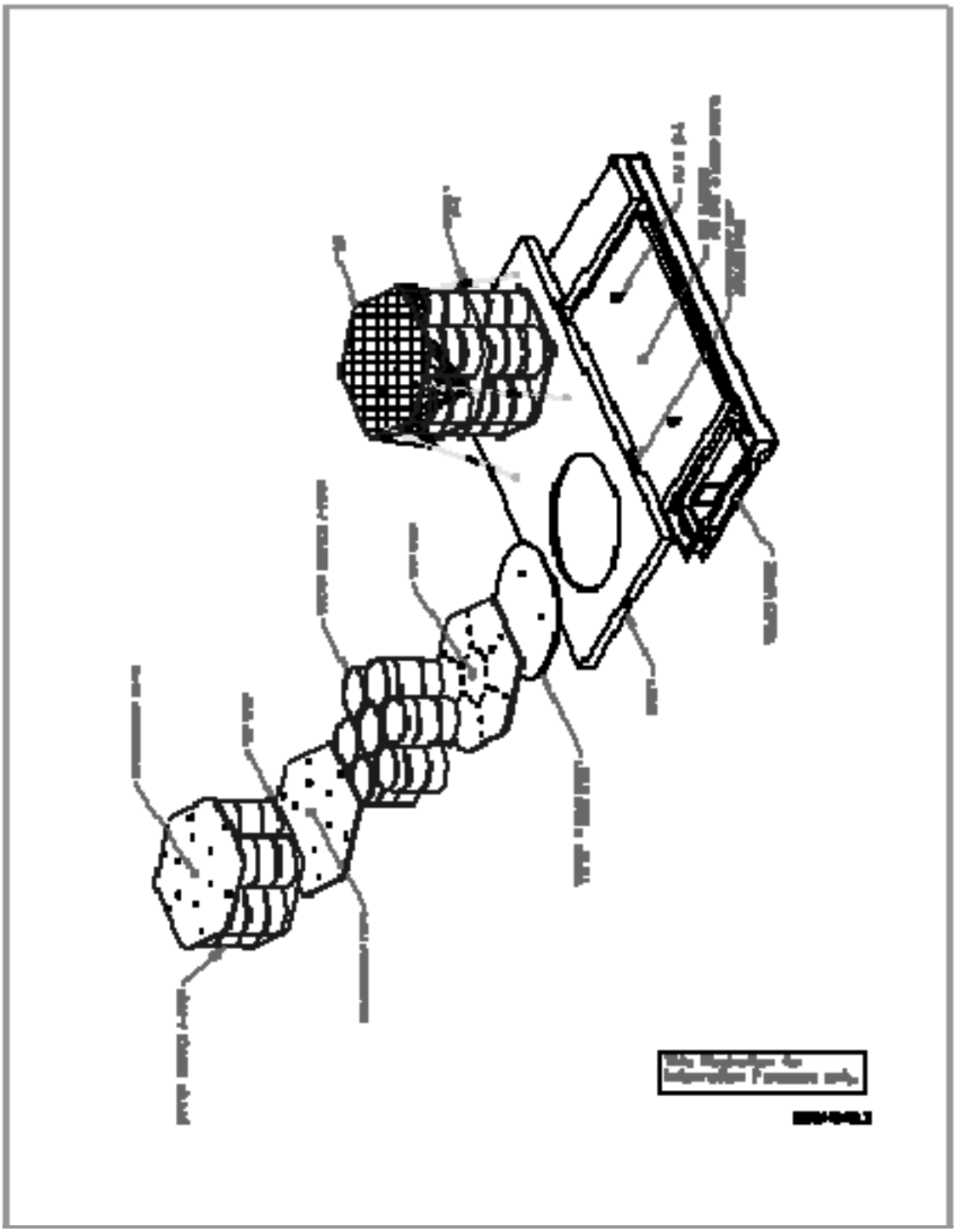

Figure WH I-II-8 – Transfer Vehicle with Drums and Facility Pallet

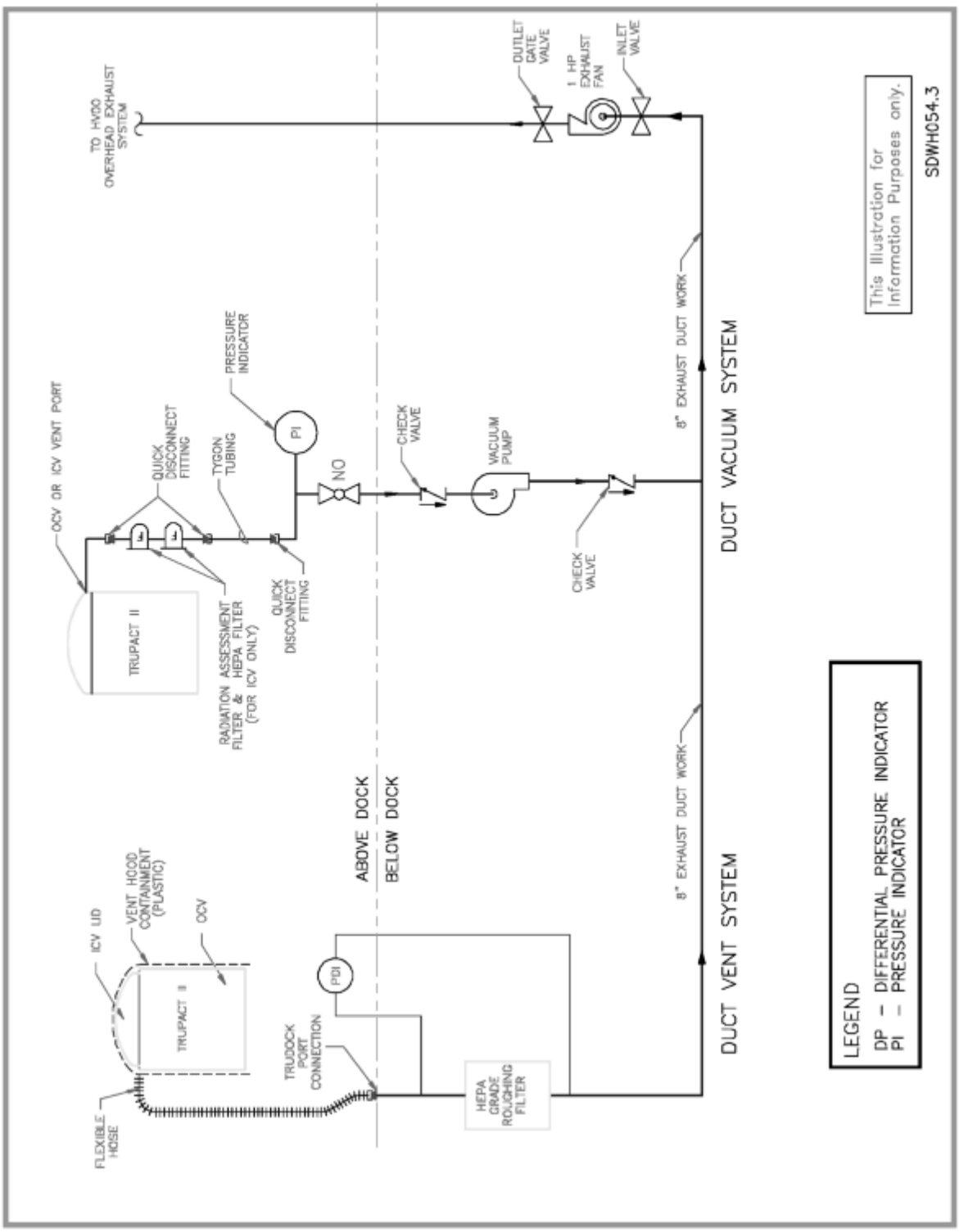

Figure WH I-II-9 – TRUDOCK Exhaust System

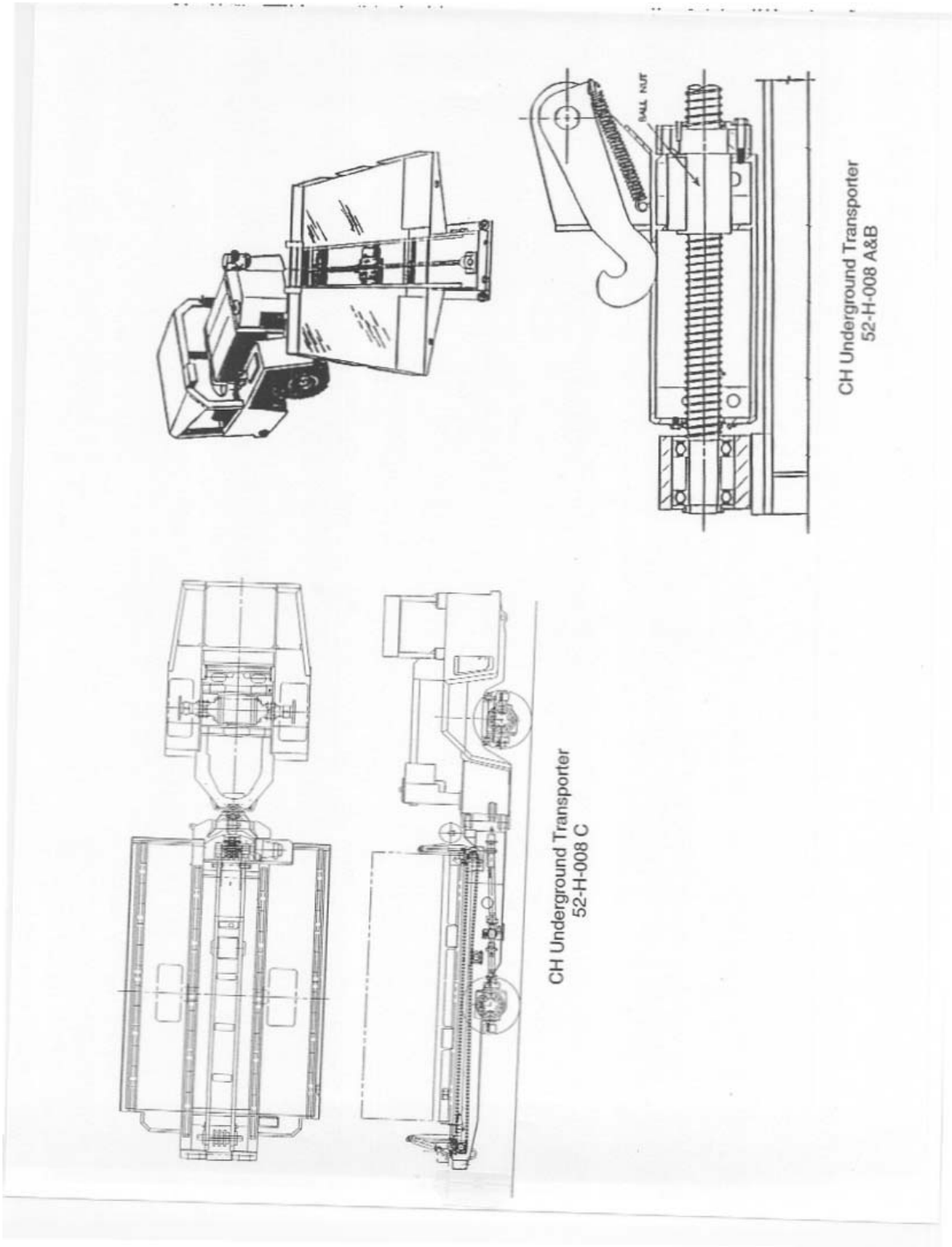

Figure WH I-II-10 – CH Underground Transporters

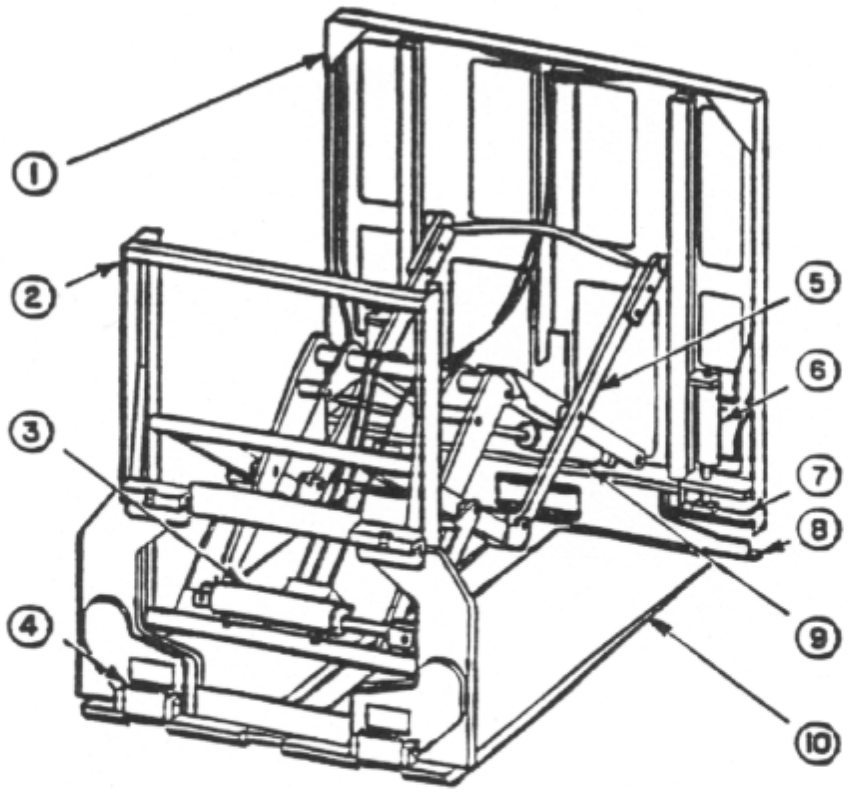

(1) Push Rack
(2) Base Assembly
(3) Side Shift Cylinder
(4) Lower Retainer
(5) Linkage Assembly
(6) Gripper Cylinder
(7) Gripper Bar
(8) Gripper Jaw
(9) Push Cylinder
(10) Platen

This Illustration for Information Purposes only.

SDWH035.1

Figure WH I-II-11 – Typical Push-Pull Attachment

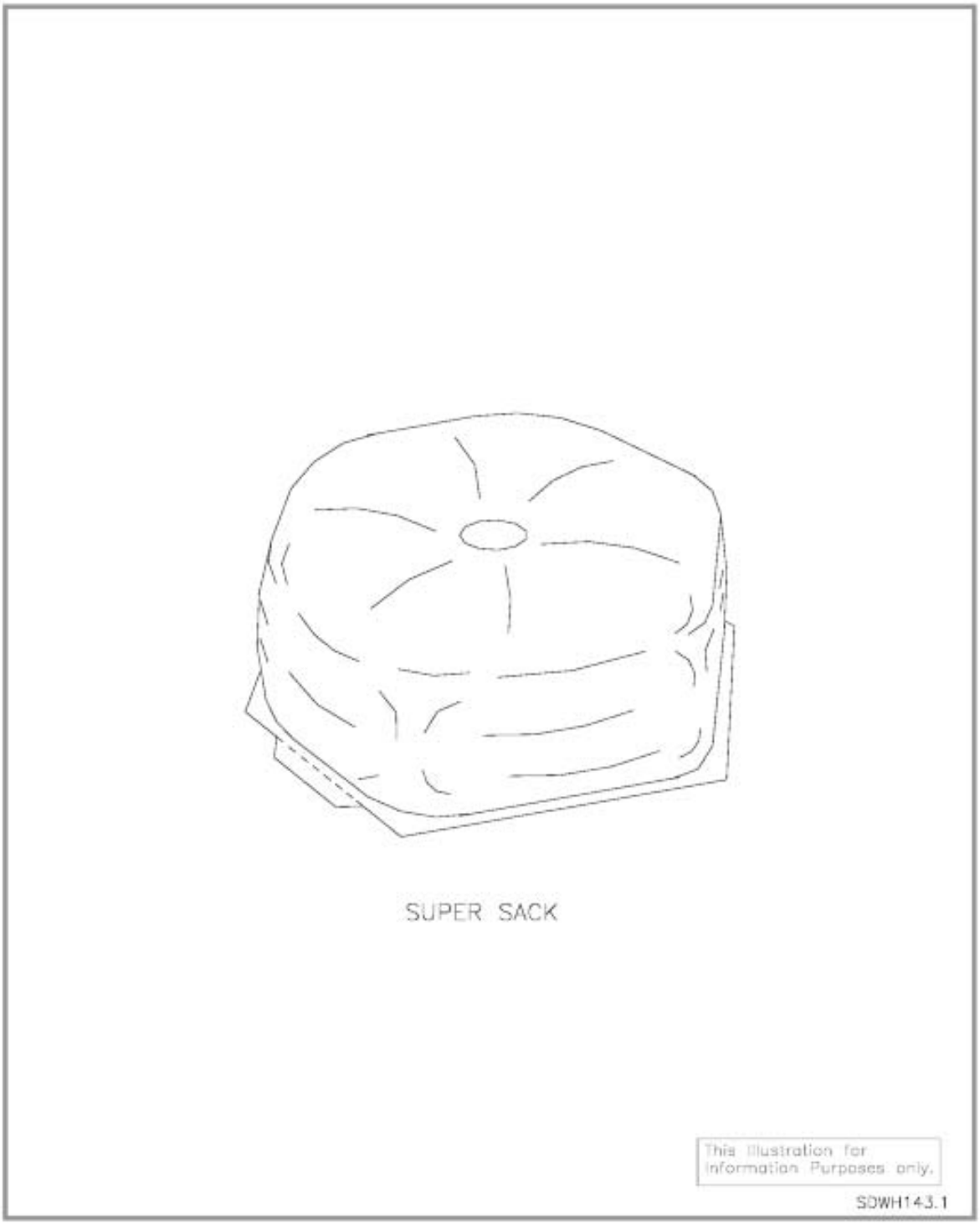

Figure WH-I-II-12 – Super Sack

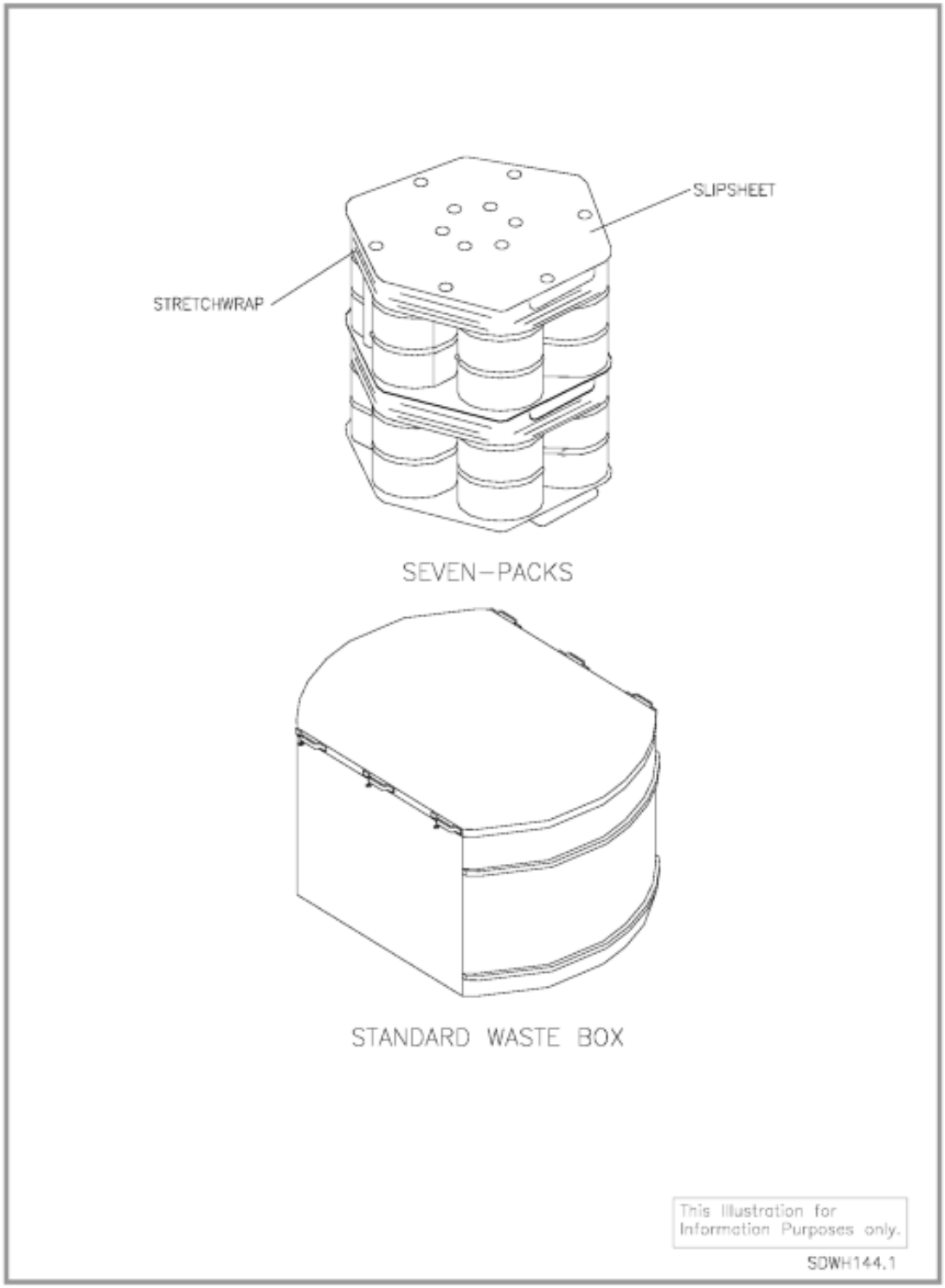

Figure WH I-II-13 – Waste Containers

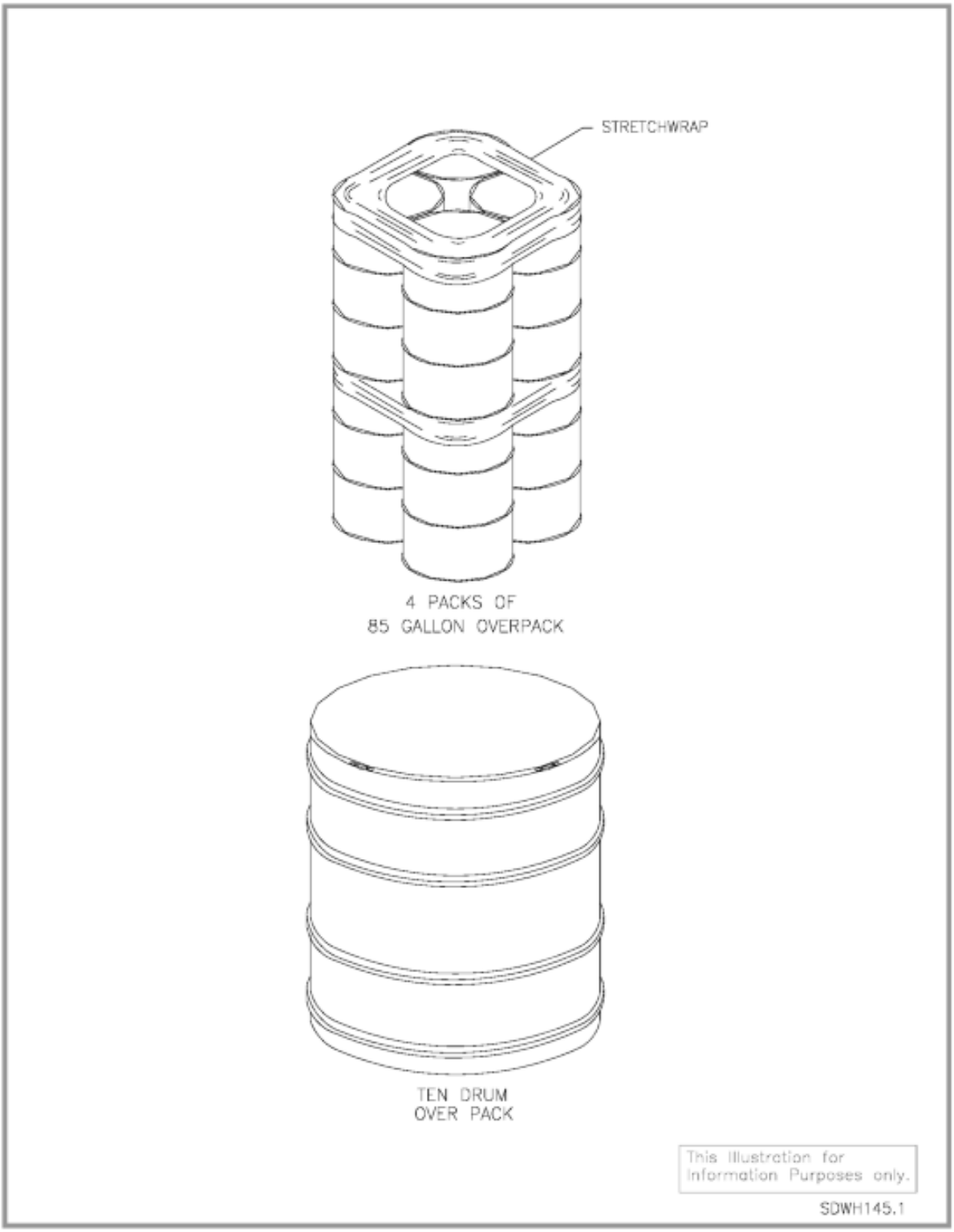

Figure WH I-II-14 – 85-Gallon and Ten-Drum Overpacks

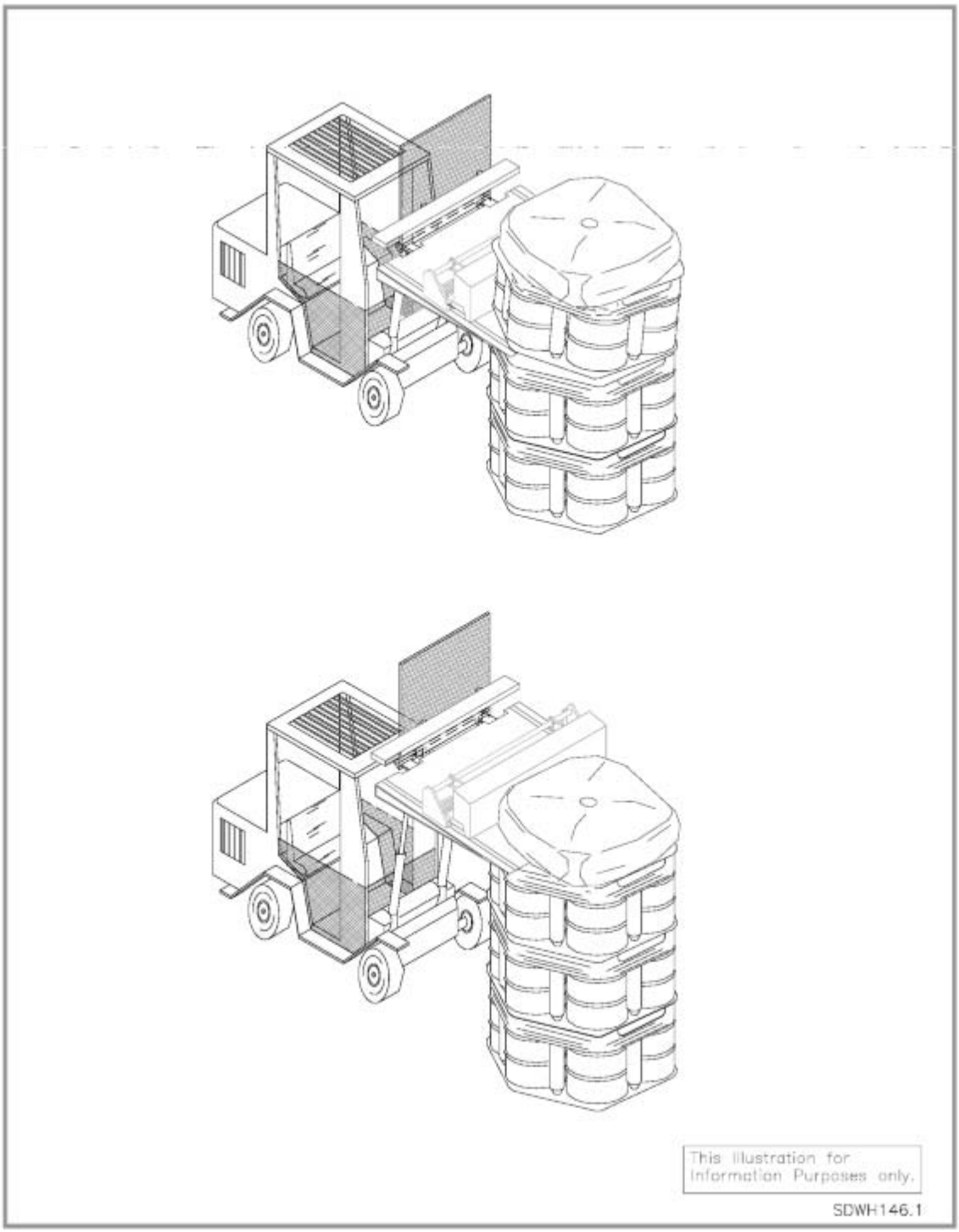

Figure WH I-II-15 – Super Sack Emplacement on Waste Stack

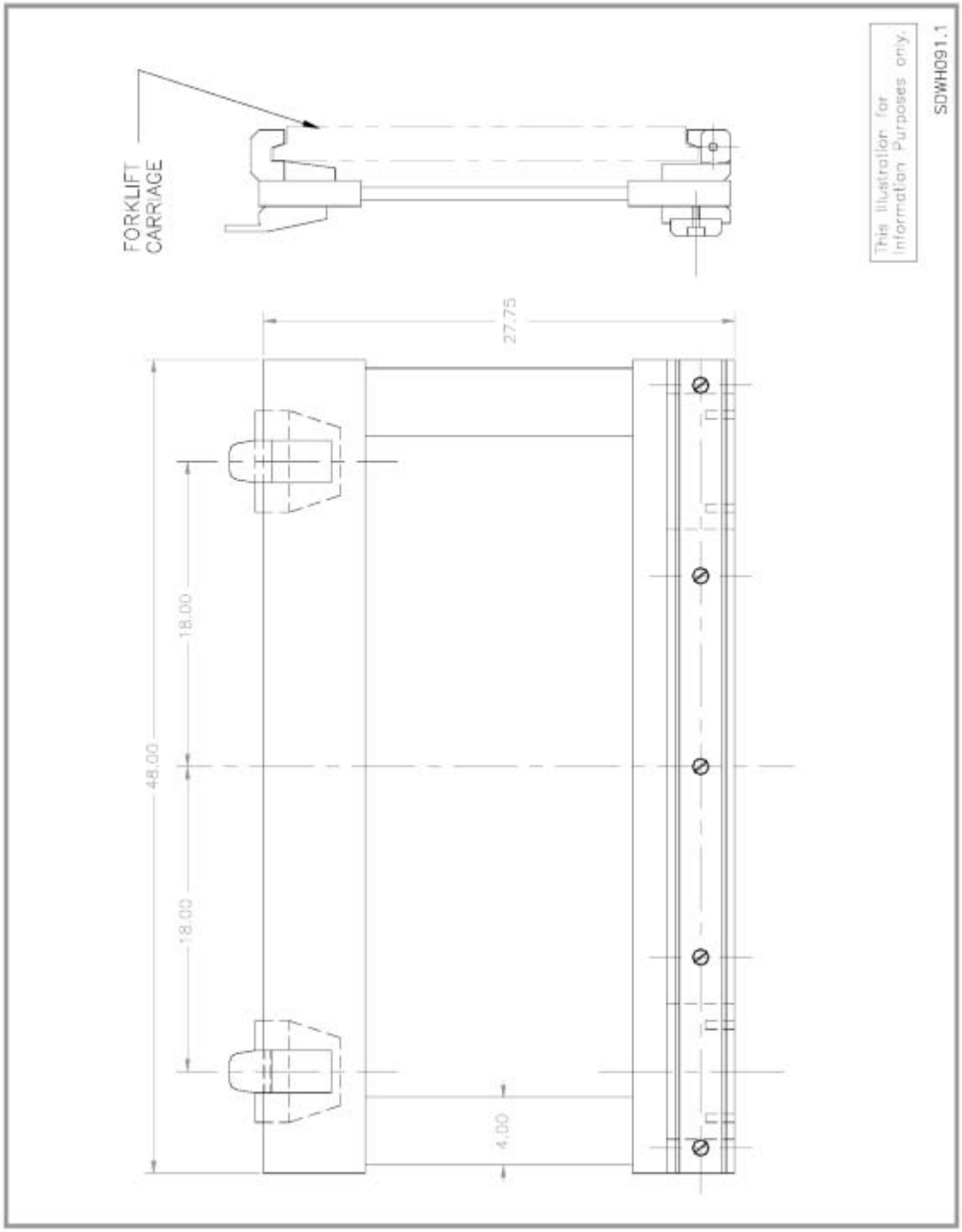

Figure WH I-II-16 – SWB Forklift Fixture

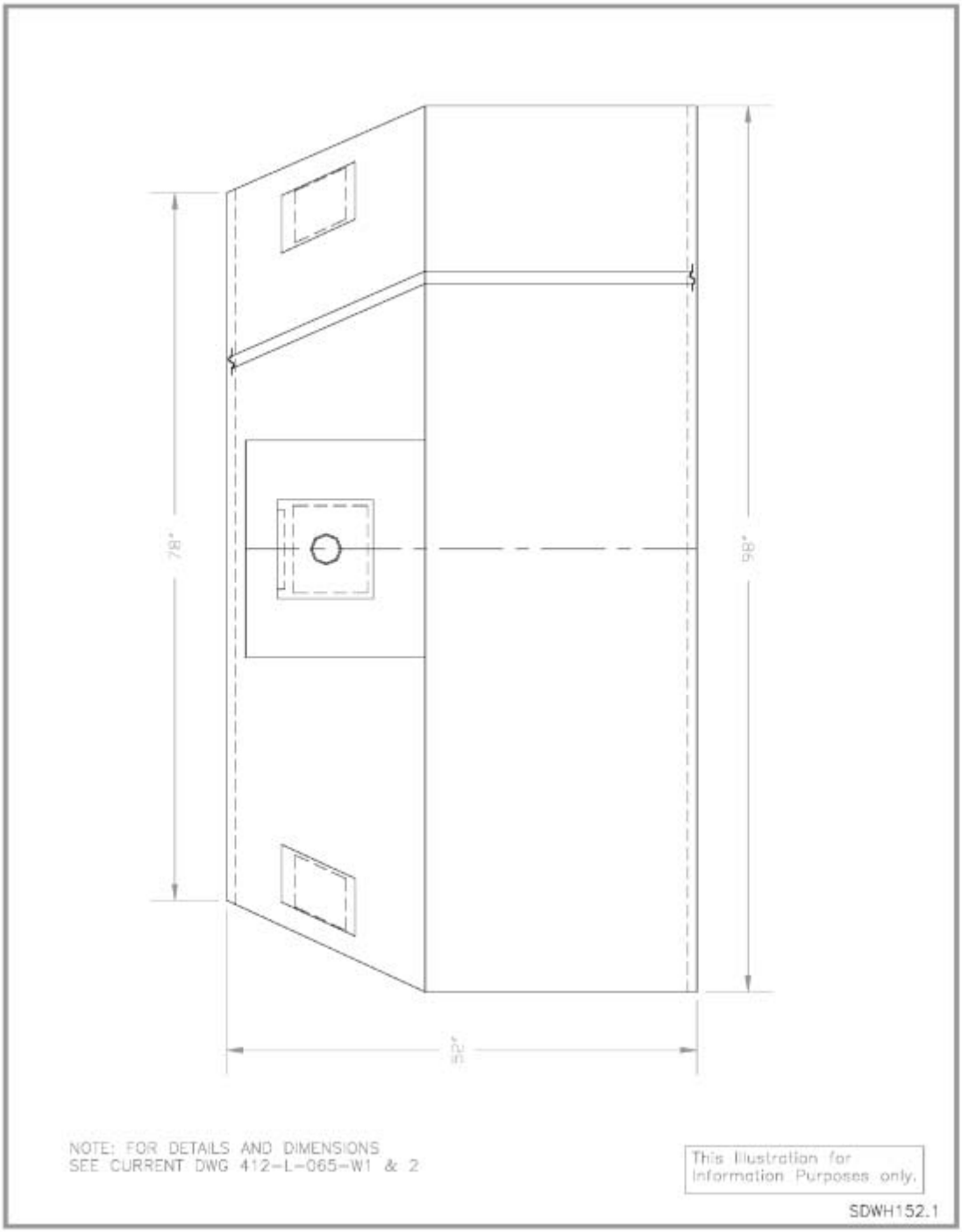

Figure WH I-II-17 – Vent Hood Containment Chamber

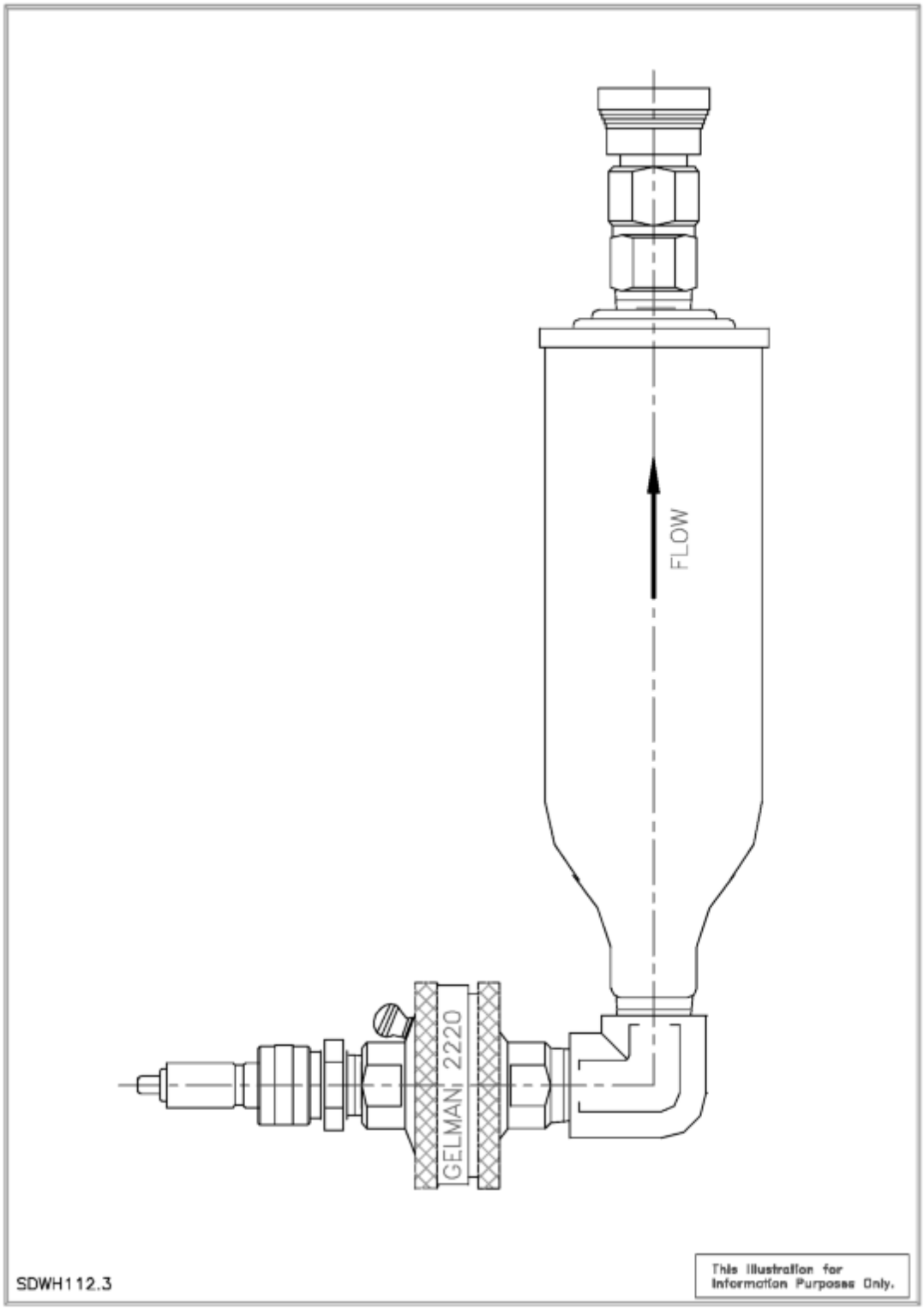

Figure WH I-II-18 – Radiation Assessment Filter Assembly

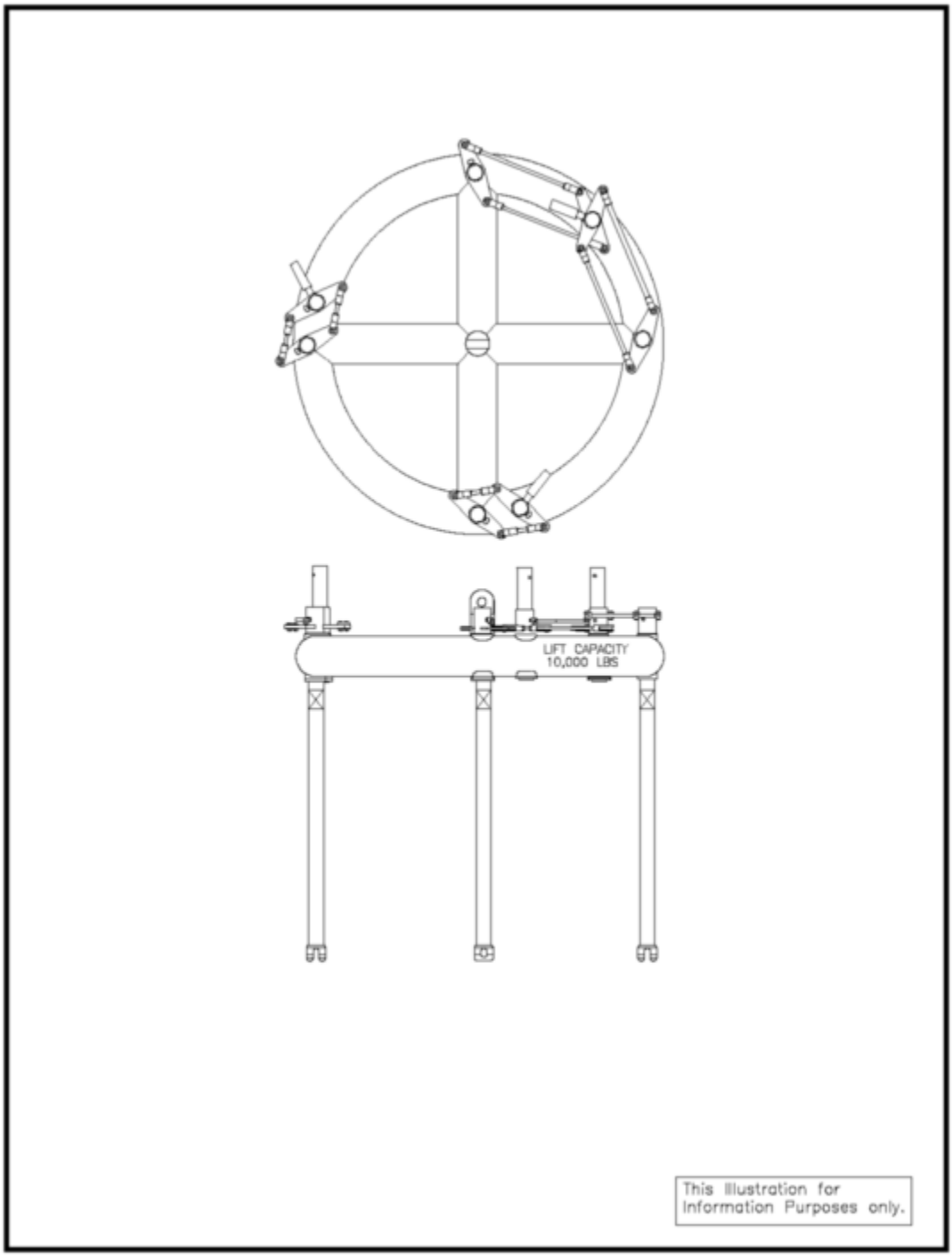

Figure WH I-II-19 – Four-Pack Lift Fixture Adapter

Part I, Chapter III
Table of Contents

Subsystem WH04, Site Derived Waste Requirements, Design, and Operations

1.0 PRIMARY FUNCTIONS 1
2.0 DESIGN REQUIREMENTS 1
2.1 General Design Requirements 1
2.2 System General Requirements 1
2.2.1 WH04 Site-Derived Waste Handling Equipment Requirements 1
2.3 Operational Requirements 2
2.4 Structural Requirements 2
2.5 General arrangements and Essential Features 2
2.6 Maintenance Requirements 2
2.7 In-Service Inspections 2
2.8 Instrumentation and Control Requirements 2
2.9 Interfacing System Requirements 2
2.10 Quality Assurance Requirements 2
2.11 Codes and Standards 2
2.12 Reliability Assurance Requirements 3
3.0 DESIGN DESCRIPTION 3
3.1 Summary 3
3.2 Detailed System Description 3
3.3 System Performance Characteristics 4
3.4 System Arrangement 4
3.5 Component Design Description 4
3.5.1 55-Gallon Drum Containers 4
3.5.2 Drum Handler Fixture 4
3.5.3 Waste Water Disposal Tank/Trailer 4
3.6 Instrumentation and Control 5
3.6.1 I&C for the Waste Water Tank/Trailer 5
3.7 System Interfaces 5
3.7.1 Primary Interfaces 6
3.7.2 Secondary Interfaces 6
4.0 OPERATION 6
5.0 SYSTEM LIMITATIONS, SET POINTS, AND PRECAUTIONS 6
5.1 Radiation Limits 6
5.2 Operating Limits 6
5.3 Set Points and Alarms 7
5.4 Interlocks 7
5.5 Precautions 7
6.0 OFF-NORMAL EVENTS 7
7.0 MAINTENANCE 7

List of Figures

Figure Page

Figure WH I-III-1 - Drum Handler Fixture 8
Figure WH I-III-2 - Waste Water Disposal Tank/Trailer 9

Part I, Chapter III

Subsystem WH04, Site-Derived Waste

1.0 PRIMARY FUNCTIONS

Refer to Chapter G for the general primary functions.

2.0 DESIGN REQUIREMENTS

2.1 General Design Requirements

Refer to Chapter G for the general design requirements.

2.2 System General Requirements

2.2.1 WH04 Site-Derived Waste Handling Equipment Requirements

2.2.1.1 The site-derived waste handling equipment shall be capable of processing and emplacing site-derived solid radwaste. The maximum projected solid radwaste generated while handling the expected average annual throughput is estimated as follows:

Source		Cubic Feet
Health Physics Laboratory		4
Solid Waste (filters, wipes, etc.)		205
Decontamination materials		200
Sweepings and other materials		8
	Total	417

2.2.1.2 SWBs and 55-gallon metal drums shall be used for the collection and isolation of site-derived solid waste.

2.2.1.3 All site-derived low-level solid waste (wipes, disposable tools that are contaminated, contaminated filters, etc.) shall be collected and placed in appropriately marked containers. These containers shall be moved to a temporary accumulation area (within the permitted area) for classification, recording, packaging, and emplacement.

2.2.1.4 The surface dose rates of filled site-derived waste containers shall be below 200 mrem/hr.

2.2.1.5 All reusable containers shall be cleaned, decontaminated, and identified before being released for reuse.

2.2.1.6 Small amounts of liquid radwaste will be collected in the appropriate containers and transported to the temporary accumulation area.

2.2.1.7 All filters used to collect radwaste particulates shall be individually sealed in a plastic bag as they are removed from their filter housings. Bagged filters shall be stacked in a sealable container and taken to the accumulation area for disposition.

2.2.1.8 Large amounts of (suspected) liquid radwaste will be collected in the sump and floor trenches provided by System CF00. A sump transfer pump is provided to transfer liquid radwaste from the waste collection sump to 55-gallon drums. The liquid waste shall be solidified in the 55-gallon drums following controlled procedures; it will then be handled as solid site-derived waste.

2.3 Operational Requirements

Refer to Chapter G for the general operational requirements.

2.4 Structural Requirements

Refer to Chapter G for the general structural requirements.

2.5 General arrangements and Essential Features

Refer to Chapter G for general arrangements and essential features.

2.6 Maintenance Requirements

Refer to Chapter G for the general maintenance requirements.

2.7 In-Service Inspections

Refer to Chapter G for the general in-service inspections.

2.8 Instrumentation and Control Requirements

Operator controls and indicators shall be provided to operate the sump transfer pump.

2.9 Interfacing System Requirements

Refer to Chapter G for the primary and secondary interfacing requirements.

2.10 Quality Assurance Requirements

Refer to Chapter G for the program quality assurance requirements.

2.11 Codes and Standards

Refer to Chapter G for the codes and standards.

2.12 Reliability Assurance Requirements

Refer to Chapter G (General Requirements) and Part I Chapter II (WH02) for reliability assurance requirements.

3.0 DESIGN DESCRIPTION

This section provides a detailed description of the Site-derived Waste Handling Equipment (Subsystem WH04) components, arrangements, performance characteristics, instrumentation and control, and system interfaces.

3.1 Summary

Solid and liquid radioactive waste (radwaste) can be derived at the WIPP facility, surface or underground. This can occur as a result of such events as accidental radioactive contamination on the surface of waste containers, inadvertent damage of a waste container, removal of HEPA filters, and activation of fire sprinklers washing down radioactive particles onto the WHB floor and into the water collection trenches and sump pit. Solid radwaste consists of such items as contaminated rags, protective clothing, smears, plastic bags, equipment parts, small tools, and spent HEPA filters. Liquid radwaste consists of liquids (mostly water) that contain radioactivity in excess of the natural background.

3.2 Detailed System Description

Site-derived TRU or TRU mixed waste is collected and transferred to a waste accumulation area in the WHB or to a temporary radwaste accumulation area in the underground. All site-derived radwaste is packaged into 55-gallon plastic lined drums and emplaced and stored in the underground as solid radwaste. Liquid radwaste is solidified using Aquaset or another approved material and then placed in disposal.

In the case of a significant amount of suspect liquid, such as water from the fire sprinkler system, flowing into the WHB sump pit, the first activity will be to analyze the liquid to determine if it is contaminated, and the type and amount of contamination. Liquid radwaste will be transferred into 55-gallon drums by the sump pump in preparation for solidification. Liquid wastes will be surveyed for radiation content, and any liquid TRU or TRU-mixed wastes will be treated and managed as site-derived wastes in accordance with applicable Waste Operations procedures. Liquid wastes that are not rad contaminated will be sampled to determine if they contain hazardous constituents, and will be managed in accordance with applicable Hazardous Waste Operations procedures.

Small tools and parts which become radioactively contaminated are disposed of as site-derived waste and replaced by new tools or parts.

3.3 System Performance Characteristics

None

3.4 System Arrangement

Refer to Section 3.4 of Chapter G and Part I-I for the related CH TRU area system arrangement.

3.5 Component Design Description

3.5.1 55-Gallon Drum Containers

Fifty-five-gallon DOT 7A drums with open tops and polyethylene liners are used to contain site-derived solid and liquid radioactive waste. The weight of a loaded drum is not to exceed 1,000 lb, and its internal volume is approximately 7.4 cubic feet. The drum is provided with a locking ring and bolt for closing and sealing the lid to the drum. There shall be a filter installed in the lid.

Aquaset or another approved material is used to solidify any liquid in the drums in accordance with approved procedures. After completing the solidification process, the drums are then handled as site-derived solid waste. Each collection drum is clearly marked with its contents, and a data package is generated and processed.

3.5.2 Drum Handler Fixture

The drum handler fixture is used to lift and move one or two drums concurrently through use of two parrot-beak type grippers which engage the top rim of the drum. A single gripper is used to lift a single 55-gallon drum. The fixture has fork guides to permit it being picked up by a 3-ton or a 6-ton forklift.

The fixture consists of one base unit and two gripper units, with an approximate total weight of 360 lb. Total carrying capacity of the unit is 4,000 lb (2,000 lb per gripper). Figure WH I-III-1 shows the drum handler configurations.

3.5.3 Waste Water Disposal Tank/Trailer

One waste water disposal tank trailer is provided, as shown in Figure WH I-III-2, for the collection and temporary storage of water which is not radioactively contaminated but which has not been proven to be clean (may contain hazardous waste constituents).

The waste water tank is made of polypropylene plastic and has a capacity of 1,000 gallons. The trailer on which the water tank sits is designed with a dual axle capable of carrying the load of a full tank of water and the associated equipment. The trailer is designed for a maximum speed of 35 miles per hour on paved and gravel roads. It is equipped with electric brakes that are actuated by the towing vehicle and has the capacity to safely stop the fully loaded trailer.

A pump is mounted on the front end of the trailer with piping, fittings, and valves to pump the water into and out of the tank. In addition, 100 ft of 1-1/2-in. hose is provided for connection to the discharge side of the pump and 35 ft of 1-1/2-in. noncollapsible hose for the suction side.

The pump has the following performance characteristics:

- Pump rating — 130 gpm
- Pump head (minimum) — 15 ft
- Pump inlet/outlet (port threads) — 1-1/2-in. NPT piping
- Pump motor — 2 HP, 115/230v, single-phase, 60 Hz, 3450 RPM

3.6 Instrumentation and Control

This section describes the I&C and control interlocks associated with the waste handling system. Subsystem WH04 has no instruments requiring range, accuracy, and set points.

3.6.1 I&C for the Waste Water Tank/Trailer

The waste water disposal tank/trailer is equipped with a battery and a pull switch to activate the electric brakes. The trailer mounted battery provides the power to activate the brakes. The pull switch cable is connected to the towing vehicle. If the trailer becomes separated from the towing vehicle, the steel cable pulls the safety switch connecting the power to the brakes to stop the trailer.

3.7 System Interfaces

Listed below by subsystem is a summary of primary interface requirements for the WH04 system.

3.7.1 Primary Interfaces

The site-derived waste handling system requires service from the Plant Building, Facilities and Miscellaneous Equipment System CF00 and the Electrical System ED00.

3.7.1.1 CF00

Provide the space and collection trenches and sump in the WHB for the liquid site derived waste.

Provide space in the WHB for storage of drums containing site derived waste.

3.7.2 Secondary Interfaces

System WH04 provides services to the following systems:

3.7.2.1 CF00

Should liquid from any source (i.e., firewater, rainwater) be released in the WHB, System WH04 provides the disposal capability.

4.0 OPERATION

For the handling and processing of site derived waste refer to WIPP site controlled waste handling operating procedures.

5.0 SYSTEM LIMITATIONS, SET POINTS, AND PRECAUTIONS

This section describes the operating limits, set points, alarms, interlocks, and precautions as related to operation of the waste handling system. Consideration is given to general personnel safety, equipment safety and performance, and overall system performance.

The information reiterates the limits, set points, and precautions imposed either implicitly or explicitly by the system operations described in Sections 4.0, 6.0, and 7.0.

5.1 Radiation Limits

The external surface dose rate of any individual CH TRU waste container shall be no greater than 200 mrem/hr.

5.2 Operating Limits

5.2.1 Containers used for site-derived waste must meet DOT Type A requirements.

5.2.2 All waste container filters must conform to DOE/WIPP-069, with a porous carbon/carbon composite construction.

- Drums (55-gallon or 85-gallon) shall have one filter.
- SWBs shall have two filters, with vacant ports plugged
- TDOPs have nine filters, with the vacant port plugged (filters are to be installed from the inside)

5.2.3 All waste water in the WHB shall be sampled for radioactive and hazardous constituents before disposal.

5.3 Set Points and Alarms

None

5.4 Interlocks

None

5.5 Precautions

None

6.0 OFF-NORMAL EVENTS

Refer to Section 6.0 of Part I, Chapter II, for CH TRU waste handling off-normal events.

7.0 MAINTENANCE

Refer to Section 7.0 of Chapter G for the maintenance requirements and approach related to waste handling subsystems.

WIPP site controlled corrective maintenance, preventative maintenance, and in-service inspection procedures apply to the following Subsystem WH04 Site Derived Waste Handling equipment.

- Waste water disposal trailer
- Drum handler fixtures

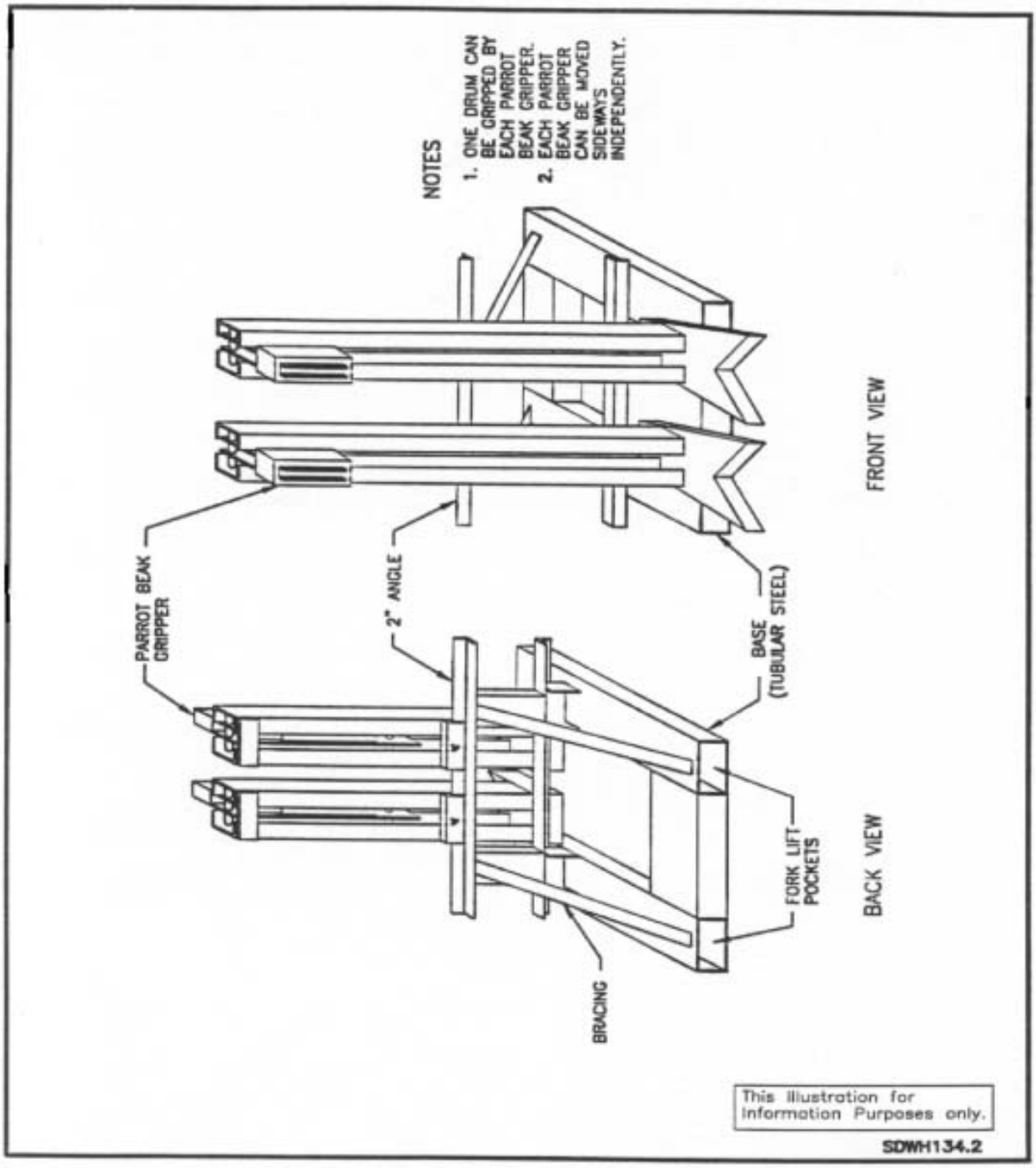

Figure WH I-III-1 – Drum Handler Fixture

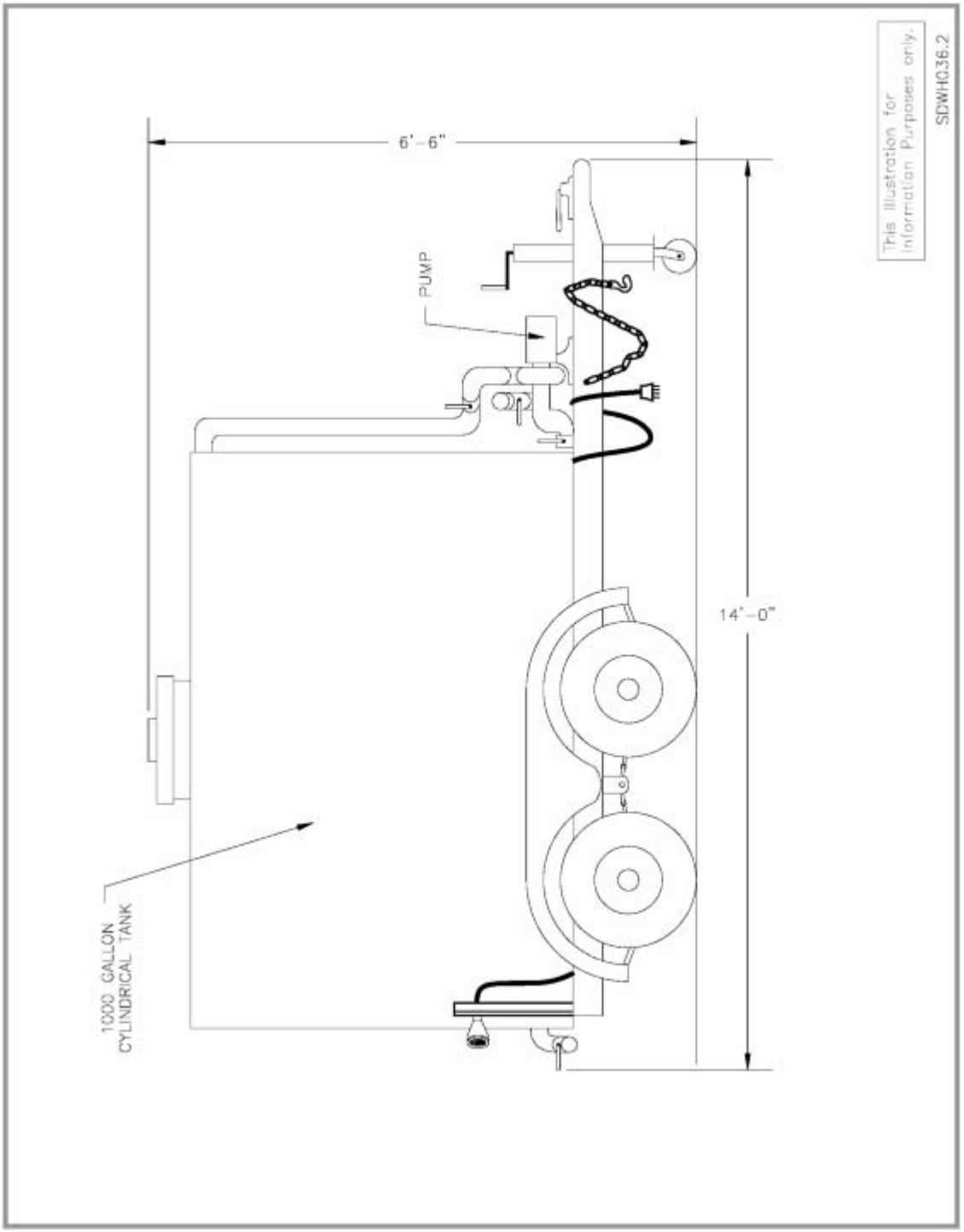

Figure WH I-III-2 – Waste Water Disposal Tank/Trailer

Part II, Chapter I
Table of Contents

Subsystem WH03, RH TRU Waste Handling Equipment Requirements
Design and Operation

1.0 PRIMARY FUNCTIONS 1
2.0 DESIGN REQUIREMENTS 1
2.1 General Design Requirements 1
2.2 System General Requirements 1
2.3 Operational Requirements 5
2.4 Structural Requirements 6
2.5 General Arrangements and Essential Features 6
2.6 Maintenance Requirements 6
2.7 In-Service Inspections 6
2.8 Instrumentation and Control Requirements 6
2.9 Interfacing System Requirements 8
2.10 Quality Assurance Requirements 8
2.11 Codes and Standards 8
2.12 Reliability Assurance Requirements 8
3.0 DESIGN DESCRIPTION 8
3.1 Summary 8
3.2 Detailed System Description 9
3.3 System Performance Characteristics 12
3.4 System Arrangement 12
3.4.1 Surface System Arrangement 12
3.4.2 Underground Disposal Arrangement 13
3.5 Component Design Descriptions 14
3.5.1 RH Bay Equipment 14
3.5.2 Cask Loading Room Equipment 22
3.5.3 Underground Equipment 32
3.6 Instrumentation and Control 42
3.6.1 I&C for the 140/25-Ton Capacity Overhead Bridge Crane 46
3.6.2 I & C for the Cask Preparation Station 2-1/2 Ton Jib Crane 46
3.6.3 I&C for the Road Cask Transfer Cars 47
3.6.4 I&C for the Cask Loading Room 47
3.6.5 I&C for the Horizontal Emplacement and Retrieval Equipment (HERE) .. 55
3.7 System Interfaces WH03 56
3.7.1 Primary Interfaces 56
3.7.2 Secondary Interfaces 58
4.0 OPERATION 58
5.0 SYSTEM LIMITATIONS, SET POINTS, AND PRECAUTIONS 59
5.1 Radiation Limits 59
5.2 Operating Limits 59
5.3 Set Points and Alarms 60
5.4 Interlocks 60
5.4.1 Canister Transfer System Interlocks 60

5.4.2 HERE Control System Interlocks 66
5.4.3 HERE Tilt Mismatch/Change Interlocks 74
5.5 Precautions..... 74
6.0 OFF-NORMAL EVENTS AND RECOVERY..... 75
7.0 MAINTENANCE 75

List of Figures

Figure Page

Figure WH II-I-1A, Hot Cell Complex Layout 76
Figure WH II-I-1B, RH Bay Equipment Layout 77
Figure WH II-I_2 - 10-160B Road Cask 78
Figure WH II-I-3 - 14025-Ton Bridge Crane 79
Figure WH II-I-4 - Shielded Road Cask 80
Figure WH II-I-5 - Removal of Impact Limiter Collar 81
Figure WH II-I-6 - Impact Limiter Support Stands 82
Figure WH II-I-7 - Rotating Shielded Road Cask 83
Figure WH II-I-8 - Lifting Shielded Road Cask 84
Figure WH II-I-9 - Lowering Road Cask Onto Transfer Car 85
Figure WH II-I-10 - Cask Preparation Station Assembly 86
Figure WH II-I-11 - Cask Preparation Station Jib Crane 87
Figure WH II-I-12 - Elevated Work Platform 88
Figure WH II-I-13 - Hand Operated Torque Multiplier 89
Figure WH II-I-14 - Road Cask Transfer Car in Cask Unloading Room 90
Figure WH II-I-15 - 72B Road Cask Transfer Car 91
Figure WH II-I-16 - 10-160B/72B Road Cask Transfer Car Configured for 10-160B Casks 92
Figure WH II-I-17 - 10-160B/72B Road Cask Transfer Car Configured for 72B Casks . 93
Figure WH II-I-18 - 72B Cask Outer Lid Tool / Ultralight 72B Cask Outer Lid Tool 94
Figure WH II-I-19 - 72B Cask Outer Lid Storage Stand 95
Figure WH II-I-20 - Inner Lid Lift Fixture 96
Figure WH II-I-21 - RH 72B Cask Inner Lid Alignment Tool 97
Figure WH II-I-22 - 72B Cask Inner Lid Storage Stand 98
Figure WH II-I-23 - 72B Cask Storage Racks and Extensions 99
Figure WH II-I-24 - Impact Limiter Storage Rack 100
Figure WH II-I-25 - Facility Cask 101
Figure WH II-I-26 - Facility Cask Transfer Car 102
Figure WH II-I-27 - Facility Cask Rotating Device 103
Figure WH II-I-28 - 6.25-Ton Grapple Hoist 104
Figure WH II-I-29 - Grapple Hoist Drive 105
Figure WH II-I-30 - Facility Grapple 106
Figure WH II-I-31 - Telescoping Port Shield 107
Figure WH II-I-32 - Shield Bell and Block 108
Figure WH II-I-33 - Facility Cask Turntable 109
Figure WH II-I-34 - CTS Main Operator Control Panel (Upper Section) 110
Figure WH II-I-35 - Cask Loading Room Operator Control Console (Lower Section) . 111
Figure WH II-I-36 - Alignment Fixture 112
Figure WH II-I-37 - Alignment Fixture with Shield Collar 113
Figure WH II-I-38 - Waste Transfer Machine 114
Figure WH II-I-39 - Leveling Platform 115
Figure WH II-I-40 - Staging Platform 116
Figure WH II-I-41 - Transfer Carriage 117
Figure WH II-I-42 - Transfer Mechanism and Grapple Override Features 118

Figure WH II-I-43 - Grapple 119
Figure WH II-I-44 - Shield Plug Carriage 120
Figure WH II-I-45 - Steel Shielding Layer 121
Figure WH II-I-46 - Control Console Panel Arrangement for the Waste Transfer Machine 122
Figure WH II-I-47 - Transport Equipment 123
Figure WH II-I-48 - Waste Canister AND Shield Plug Installation 124
Figure WH II-I-49 - Shield Plug Supplemental Shielding Ring 125

List of Tables

Table Description Page

Table II-I-1 - I&C Equipment for WH03 1 44

Part II, Chapter I

Subsystem WH03, RH TRU Waste Handling Equipment Requirements
Design and Operation

1.0 PRIMARY FUNCTIONS

Refer to Chapter G for the general primary functions.

2.0 DESIGN REQUIREMENTS

2.1 General Design Requirements

Refer to Chapter G for the general design requirements.

2.2 System General Requirements

RH waste handling equipment is capable of processing RH TRU waste shipping casks. RH TRU waste containers shall be transported to the WIPP in U.S. Nuclear Regulatory Commission (NRC) certified type B shielded road casks, shall be examined in either the shielded hot cell or in the transfer cell and shall be moved from there to the underground disposal position in a shielded facility cask. Only shielded road casks shall be used to transport RH TRU waste containers to WIPP. Special over-the-road trailers shall be used to ship the road casks; however, shipments by rail can also be accommodated. The RH TRU waste shipping package (road casks containing the containers with the RH TRU waste) is delivered into the RH Bay of the WHB provided by subsystem CF02.

2.2.1 The RH waste handling equipment shall be designed to remotely handle RH TRU waste containers having a surface dose rate greater than 200 mrem/hr. The maximum surface dose rate of RH TRU waste canisters shall not exceed 1,000 rem/hr.

2.2.2 The material handling operations dealing with RH waste handling equipment, RH TRU road casks, and RH waste containers are designated pre-engineered production lifts as described in the DOE STANDARD, HOISTING and RIGGING (DOE-STD-1090, latest revision).

2.2.3 72B-RH TRU waste canisters shall have a maximum outside diameter of 26 in., a maximum length of 121 in. and shall be provided with a pintle for axial lifting.

2.2.4 Facility canisters shall have a maximum outside diameter of 28 in., a maximum length of 123 in., and shall be provided with a pintle for axial lifting.

2.2.5 An overhead bridge crane with a main 140-ton capacity hoist and an auxiliary 25-ton capacity hoist shall be provided for lifting loads in the WHB RH Bay.

2.2.6 Equipment shall be provided to remove and support the impact limiters collars from the road casks before they are removed from the trailer.

2.2.7 A lifting yoke shall be provided for use with the RH Bay overhead bridge crane. The lifting yoke shall provide the capability to rotate and lift vertically the 72B road cask, with the impact limiters removed, from the transport vehicle and place it in a road cask transfer car. The lifting yoke will also be used to transport empty 72B road casks from the road cask transfer car to the road cask storage racks.

2.2.8 A cask preparation station or work station is provided for preparing casks to be unloaded and returned to generator sites. The cask preparation station includes a jib crane and an elevated work platform.

2.2.9 The cask preparation station jib crane has adequate rated capacity (5,000 pounds), height and configuration to remove 72B road cask lids and place them on lid stands. The crane is located near the elevated work platform and transfer car rails.

2.2.10 The cask preparation station elevated work platform provides access to cask lids, vent ports and leak check ports. It provides capacity for operators and their tools and has stairways for access to the decks which are located by the transfer car rails.

2.2.11 Rail mounted, self-propelled road cask transfer cars shall be provided to support road casks in the vertical position, for access to the cask closure heads at the cask preparation station. The transfer cars shall also transport a road cask from the RH Bay, through the cask preparation station and into the cask unloading room.

2.2.12 For the RH 72B Road Cask, an outer closure (OC) lid lift fixture, an inner vessel (IV) lid lift fixture, an IV lid alignment tool, and lid storage stands shall be provided to disengage and store the road cask outer closure and inner vessel lids. The IV lid alignment tool is mounted on the 72B IV lid at the cask preparation station for use in the transfer cell.

2.2.13 A shielded facility cask shall be provided to move an RH TRU waste canister from the WHB cask loading room to its disposal location underground. The loaded weight of the facility cask shall not exceed 37.5 tons. The overall length of the facility cask shall not exceed 165 in. and the overall height shall not exceed 98 in.

2.2.14 The facility cask is provided with shield valves at both ends that are motor operated with manual overrides. The motor operated mechanism shall be

designed to open and close the shield valves at a nominal rate of 4 FPM. The valves are designed to support the full weight of a canister when they are closed and the cask is vertical. For surface operations, air is provided by subsystem CA01 and used to release the shield valve locking pins to permit the valves to be opened. In the underground, a compressor is used to supply air to the lock pins.

2.2.15 The facility cask is designed to be loaded and unloaded in either the vertical or horizontal position.

2.2.16 The facility cask has a strongback frame and lift guides to permit horizontal handling by a forklift.

2.2.17 The facility cask maintains shielding integrity when dropped to a concrete floor in a horizontal orientation from a height of 102 in. The equivalent impact load is 1g horizontal and 13g vertical.

2.2.18 The facility cask is designed to provide sufficient shielding for an RH TRU waste canister such that the cask surface dose rate is less than 200 mrem/hr when the canister surface dose rate is 7,000 rem/hr. However, the maximum canister surface dose rate allowed for shipment to WIPP is 1,000 rem/hr.

2.2.19 The facility cask shall be capable of handling the following RH TRU waste canisters:

- RH TRU waste canister (welded lid)
  26-in.-diameter, painted carbon steel, 121 in. maximum length, including lifting pintle, maximum loaded weight (55 gal. drums) 5,980 lb, maximum loaded weight (direct loaded) 5,250 lb

- RH TRU waste canister (removable lid)
  26-in.-diameter, painted carbon steel, 120 in. maximum length, including lifting pintle, maximum loaded weight 4,240 lb

- Facility canister
  28-in.-diameter, painted carbon steel, 123 in. maximum length, including lifting pintle, 5,000 lb maximum weight

2.2.20 A self-propelled facility cask transfer car shall be provided to transport the facility cask between the cask loading room, the waste hoist, and the underground waste hoist station area. The combined weight of an RH TRU waste canister, facility cask, and the facility cask transfer car shall not exceed the 45-ton payload limit of the waste hoist, subsystem UH06.

2.2.21 The cask loading room shall be provided with the following equipment and related controls:

- 6.25-ton overhead fixed hoist equipment with a canister grapple, toggle block, alignment sheave, and shield bell
- Floor-mounted telescoping port shield
- Canister transfer cell shield valve (controls only) - see subsystem WH05
- Rotating Platform (Turntable)
- Facility Cask Rotating Device (FCRD)
- Canister Transfer System Main Control Panel

2.2.22 A turntable shall be provided to allow redirecting the facility cask transfer car (with a fully loaded facility cask if necessary) to the RH Receiving Bay for maintenance. The turntable shall normally remain aligned to direct the facility cask transfer car to the waste hoist equipment platform. An air-operated lift is included with the turntable (air provided by subsystem CA01).

2.2.23 Horizontal emplacement and retrieval equipment (HERE) shall be provided to emplace an RH TRU waste canister and shield plug into a horizontal disposal borehole and to retrieve a waste canister and its shield plug from a borehole.

The HERE provides a Waste Transfer Machine Assembly (WTMA) that consists of an alignment fixture, waste transfer machine, shield plug carriage, and a control console.

The following design requirements shall apply to the HERE:

- The waste canister that can be handled, emplaced, and retrieved shall be limited to 28 in. outside diameter, and 123 in. overall length, and a weight of 10,000 lb. A weight of 5000 lbs. is currently the maximum but the HERE is capable of handling 10,000 lb.
- The HERE is designed to limit the equipment surface dose rate during waste canister emplacement and retrieval operations to 200 mrem/hr for canisters with a surface dose rate of 7,000 rem/hr.
- The HERE is designed to accommodate a three percent slope in the emplacement room floor. Retrieval is capable with a borehole misalignment from horizontal of up to one degree.

2.2.24 The following borehole related components shall be provided to facilitate use of the HERE:

- A borehole drill (subsystem AU04) to prepare the horizontal holes for sleeve installation and waste canister emplacement.
- A shield collar, part of the Alignment Fixture Assembly (AFA), is provided to limit the dose during permanent emplacement of waste canisters into boreholes.
- Shield plugs to be inserted into the borehole after emplacement of the waste canister to limit the borehole radiation surface dose rate.
- Supplemental shielding plates will be installed over the shield plug, if needed, to meet shielding requirements.

2.2.25 The following support equipment shall be provided for the HERE operation:

- A 6-ton capacity forklift to load and transport the shield plug carriage.
- A 20-ton capacity diesel powered forklift to move the alignment fixture and waste transfer machine between boreholes.
- A 41-ton capacity diesel powered forklift to lift the facility cask from the facility cask transfer car, carry it to the desired underground location, and place it on the WTMA, and to move the waste transfer machine between boreholes.
- Waste machine towing equipment consisting of removable rigid and removable steering type wheel assemblies used to tow the waste transfer machine from room to room.
- Portable plug-in power cable to connect the HERE to a 480-volt, 3-phase, 60-cycle underground power supply with a 50-ampere minimum capacity.

2.2.26 Shielded rooms (CF02) shall be provided with handling equipment, viewing equipment, accesses, and shielding when needed for processes that require preparing RH TRU waste canisters for disposal underground.

2.3 Operational Requirements

Refer to Chapter G for the general operational requirements.

2.4 Structural Requirements

Refer to Chapter G for the general structural requirements.

2.4.1 The 140/25-ton Bridge Crane shall be designed to hold its load in place in the event of a DBE.

2.4.2 Functional Classification

The functional classification for the SSCs identified in this system shall be performed and documented in accordance with WP 09-CN3023 Functional Classification procedure and the functional classification section of the General Plant Design Description (GPDD). The process for establishing functional classification is contained in the DSA. Documentation of the Functional Classification analysis shall be in accordance with WIPP Configuration Management procedures.

2.5 General Arrangements and Essential Features

Refer to Chapter G for general arrangements and essential features.

2.6 Maintenance Requirements

Refer to Chapter G for the general maintenance requirements.

2.7 In-Service Inspections

Refer to Chapter G for the general in-service inspections.

2.8 Instrumentation and Control Requirements

Instrumentation and control equipment including operating stations and panels shall be provided to operate WH00 functionally operating equipment. Specific requirements for subsystem WH03 are:

2.8.1 Operator controls and indicators shall be provided to remotely operate the road cask transfer car, and the Cask Preparation Station (CPS).

2.8.2 Operator controls, indicators, and remote viewing shall be provided for the facility cask loading room to operate the following:

- Facility Cask Motor Operated Shield Valves
- Cask Loading Room 6.25-Ton Overhead Fixed Hoist and Grapple
- Canister Transfer Cell to Cask Loading Room Shield Valve
- Canister Shuttle Car Positioning
- Telescoping Port Shield
- Facility Cask Rotating Device

- Swipe Robot
- Detension Robot

Operator controls and indicators shall be provided to operate the Facility Cask Transfer Car.

Operator controls shall be provided to operate the Facility Cask Transfer Car Turntable.

2.8.3 The HERE facility cask control systems shall be designed to include the following requirements:

- A single failure shall not result in an unsafe operation.
- Making or breaking electrical connections shall not result in the condition of inadvertent operation of any mechanical device.
- Controls and interlocks shall be designed into the equipment to prevent unsafe operation and to protect personnel.
- Wiring shall be color coded and/or marked with identifying wire numbers.
- Low-level instrument signal wiring shall be shielded and/or separated from power and control cables to prevent electrical interferences where necessary.
- Cable connectors, if used, shall be provided with weatherproof locking type disconnects, connectors, or clamps.
- Fuses and/or circuit breakers shall be provided as required.
- Grounding shall be used to protect personnel and minimize electrical circuit interference.
- 115-volt, single-phase power shall be used for the control and instrumentation with 480-volt, three-phase power for the shield valve motors.
- The "on-off" power switch shall be key operated.
- Position of the shield valves shall be shown by indicating devices.

2.8.4 Manually initiated override operations shall be interlocked to prevent any operationally unsafe condition or automatic sequencing actions.

2.8.5 Operator controls and indicators shall be provided to operate the RH Receiving Bay 140/25-ton crane.

2.9 Interfacing System Requirements

Refer to Chapter G for the primary and secondary interfacing requirements.

2.10 Quality Assurance Requirements

Refer to Chapter G for the program quality assurance requirements.

2.11 Codes and Standards

Refer to Chapter G for the codes and standards.

2.12 Reliability Assurance Requirements

Refer to Chapter G for general reliability assurance requirements.

3.0 DESIGN DESCRIPTION

This section provides a detailed description of the RH TRU waste handling system (Subsystem WH03) components, arrangements, performance characteristics, instrumentation and control, and system interfaces for satisfying the Subsystem WH03 functional and design requirements.

3.1 Summary

The RH TRU waste handling system provides the equipment to handle and emplace in the Hazardous Waste Disposal Unit (HWDU) underground, as well as recover the RH TRU waste canisters received in shipping casks from various government sites.

Specific pieces of equipment of the RH TRU waste handling system are credited with preventing or mitigating accidents analyzed in the Documented Safety Analysis (DSA). The following RH TRU Waste Handling Equipment (WH03) is credited with specific design features within the DSA.

- Facility Cask **[TSR DF 6.3]**
- Underground Liquid-Fueled Vehicles **[TSR DF 6.6]**
  - 41-Ton Capacity Forklift (WH03)
  - 20-Ton Capacity Forklift (WH03)
  - 6-Ton Forklift (WH03)

3.2 Detailed System Description

Initially, RH TRU waste will be shipped to WIPP in either a 72B shielded road cask or a 10-160B shielded road cask. Inside the 72B cask is a single waste canister which holds up to three 55-gallon drums of RH TRU waste. The RH TRU waste processes for handling the 72B shipping cask is shown in Figure WH II-I-1. The RH TRU waste processes for handling the 10-160B shipping cask is described in this SDD up to unloading the shipping cask. SDD WH05 describes the Hot Cell operations for processing the contents of the shipping cask. The following system description does not discuss the interlocks in detail. They are available to provide the operator with indications that proper shielding configurations are present. All interlocks credited in Section 2.4.2 must be functioning to perform the associated activities described in this section.

The intent of the 72B process is to perform a shipping cask to facility cask transfer such that the waste canister is shielded throughout the waste handling process. Similarly, the intent of the 10-160B process is to take waste shipped in 55-gallon drums and place the drums in a facility canister that, once in the Transfer Cell, follows a process similar to that of a waste canister shipped in a 72B transportation cask.

Following shipping cask inspections after arrival at the WIPP site, the trailer carrying the shipping cask is moved into the RH Bay where the unloading process begins. The impact limiter(s) are removed from the shipping cask while on the trailer. The shipping cask is lifted from the trailer using the RH Bay overhead 140/25 ton bridge crane and placed on a road cask transfer car. Either cask is moved to the CPS in the RH Bay where it is prepared for lid removal and subsequent waste transfer.

The 72B cask is prepared by performing radiological surveys and removing the outer lid from the shipping cask. The 10-160B cask, prior to detensioning and removing the 10-160B lid bolts, has the internal cask atmosphere sampled for airborne contamination by use of a magnetically attached vent tool and assessment filter assembly. The assessment filter is the same as used in CH waste processing and described in paragraph 3.5.2.5.2 of WH02.I-II, Radiation assessment filters. After lid bolt removal, the lid remains in place for shielding. The 10-160B cask transfer car next moves to the Cask Unloading Room, where the handling processes take different paths.

72B Process - Within the Cask Unloading Room, a 25-ton overhead bridge crane lifts the 72B cask clear of the transfer car and positions the cask over a shielded port in the floor of the Cask Unloading Room, which connects to the Transfer Cell. The shuttle car is positioned under the shield valve port. The shield valve over the port is opened and the 25-ton crane lowers the cask into a shuttle car positioned under the port to receive the cask. The cask is unhooked from the crane, the hook is raised

clear of the Cask Unloading Room cell shield valve, and the shield valve is closed. The road cask transfer car can be moved back into the RH Bay. The shuttle car next positions the cask at a de-tensioning station in the transfer cell where the inner lid bolts are de-tensioned (the bolts remain with the lid). The shuttle car then moves the cask to below the Transfer Cell shielded port to the Cask Loading Room.

At this point in the process, a shielded facility cask must be aligned over the port in the Cask Loading Room above the Transfer Cell to provide a shielded path for the canister to be moved from the Transfer Cell to the facility cask. The facility cask is carried on a facility cask transfer car, which in conjunction with the facility cask rotating device, allows the facility cask to be positioned on the car in either a vertical or horizontal position. To receive a waste canister, the facility cask is positioned over the floor port in the vertical position. A 6.25-ton hoist with its shield bell and grapple centered over the facility cask, mates to the upper portion of the facility cask. The grapple is used to raise a canister from the Transfer Cell into the facility cask.

Additionally, the shield valve in the ceiling of the Transfer Cell covering the port to the Cask Loading Room must be opened; the telescoping shield in the floor of the Cask Loading Room must be extended, and the shield valves at either end of the facility cask must be opened.

Continuing the 72B process, the facility grapple is lowered through the facility cask that is positioned over the port to the Transfer Cell and removes the inner lid of the cask. A swipe robot swipes the lid bottom and the canister top. The transfer cell shield valve closes and the shuttle car repositions to allow the facility grapple to lower the inner cask lid to a storage location on the shuttle car after the transfer cell ceiling shield valve re-opens. Once the grapple is clear, the transfer cell shield valve closes and the shuttle car again positions the cask under the port. The transfer cell shield valve opens, the grapple engages the canister pintle, and the transfer of the RH waste canister from the road cask into the facility cask begins. The facility grapple engages the pintle on top of the waste canister and lifts the waste canister into the facility cask. The lifting of the canister will pause at various locations to allow swipes to be collected by a robot for contamination evaluation. If the canister is clean or has been cleaned to eliminate loose contamination, the canister is further raised into the facility cask until it clears the lower shield valve of the facility cask. At this point the Transfer Cell shield valve closes, the lower shield valve of the facility cask is closed, and the telescoping port shield retracts. The canister is lowered to allow the canister to rest on the lower shield valve. The grapple is disengaged from the canister and raised such that the upper shield valve on the facility cask is closed. The shield bell and grapple are raised clear of the facility cask. The telescoping port shield is lowered. The facility cask is now ready to be rotated for subsequent transfer to the underground.

10-160B Process - After the lid bolts are removed at the CPS the transfer car carrying the 10-160B cask is moved into the Cask Unloading Room. The shield door isolating the Hot Cell complex from the RH Bay is closed and the hot cell floor shield plugs are removed. Unloading the waste drums from the 10-160B cask and processing them in the Hot Cell is covered in SDD WH05. Once the 10-160B cask payload is removed, two empty baskets will be placed in the cask. The cask lid will be lowered down from the Hot Cell into the Cask Unloading Room and set on the cask. The shield plugs will then be reinstalled in the floor of the Hot Cell. The 140-ton shield door can then be opened and the empty cask processed for shipment to the generator site.

Once the waste is canisterized in the Hot Cell, the waste canister is lowered into the shuttle car. Except for lid removal (the shielded insert used in the shuttle car for the 10-160B would not have a lid installed) and swipes, the processes are similar to that removing the canister from the 72B cask.

After the waste canister has been enclosed in the shielded facility cask with the end valves shut, the cask is rotated back to the horizontal position, and then moved by the self-propelled facility cask transfer car to the waste hoist at the shaft collar for lowering to the underground horizon. The shielded facility cask is then lowered to the underground while on the facility cask transfer car, lifted from the facility cask transfer by a 41-ton capacity forklift, carried to the waste disposal location, and placed on the waste transfer machine assembly.

The WTMA is a part of the HERE. A 41-ton capacity forklift and a 20-ton capacity forklift are used to transport the HERE assemblies between boreholes except for the WTMA which can be placed on its own transport equipment and towed.

The waste canister is emplaced and the shield plug is installed by the HERE. The HERE has the following features:

- An alignment fixture to align the waste canister with the horizontal borehole
- The WTMA to transfer the waste canister from the facility cask into the borehole
- A shield plug carriage to allow transport of the shield plug to the HERE for insertion after the emplacement of the waste canister.

3.3 System Performance Characteristics

The WH03 subsystem shall provide equipment to allow the safe receipt, unloading, inspection and shipping of RH TRU shipping packages (RH 72B Casks) and the handling, emplacement and retrieval of RH TRU waste containers (WIPP canisters). All operations shall maintain adequate shielding between operating personnel and the waste containers.

The shielding requirement for the WH03 subsystem equipment is to maintain the dose rates at accessible equipment surfaces to less than 200 mrem/hr with a canister surface dose rate of 7,000 rem/hr.

An additional shielding requirement for the emplacement and retrieval equipment is to limit levels in all areas accessible to whole body exposure from a reference canister to less than 100 mrem/hr during emplacement and retrieval operations. The reference canister is defined as a canister containing RH TRU waste with a radiation level at the canister surface of 100 rem/hr. The WAC allows no more than 5 percent of the RH canisters received at the WIPP to have dose rates greater than 100 rem/hr up to a maximum of 1,000 rem/hr. Prior approval by the WIPP is required before RH-TRU canisters having dose rates greater than 100 rem/hr may be shipped to the WIPP. Additional exposure controls shall be instituted when emplacing canisters with surface dose rates greater than 100 rem/hr.

The emplacement configuration shall provide shielding to limit radiation dose rates in areas accessible to whole body exposures from an emplaced reference waste canister to a maximum of 5 mrem/hr.

The WH03 subsystem equipment shall have the capacity to receive, unload, inspect and return the shipping packages to the transportation system at the rate of one per 9 hour shift.

3.4 System Arrangement

Refer to Chapter G for general system arrangement as it applies to system WH00 and subsystem WH03.

3.4.1 Surface System Arrangement

Located directly north of the RH Bay is the hot cell complex. The hot cell complex includes the shielded rooms and cells where the RH TRU waste canister is unloaded from the road cask, handled, inspected, placed in a canister shuttle car, and transferred to the cask loading room where it is loaded into a shielded facility cask for emplacement in underground disposal.

Figure WH II-I-1 shows the arrangement of the hot cell complex which includes the following rooms and cells:

- Cask unloading room
- Hot cell
- Canister transfer cell
- Facility cask loading room
- Manipulator repair room
- Crane maintenance room
- Hot cell operating gallery (not shown for clarity)

The rooms and cells have 48-in.-thick concrete shield walls. The hot cell, manipulator repair room, and the hot cell operating gallery are located at the second floor level. The canister transfer cell is located in the basement and the crane maintenance room is located on the third floor. The road cask unloading room and the facility cask loading room are both at the ground level. A large concrete shield door is located at the south end of the road cask unloading room to shield the RH Bay when unloading an RH TRU waste payload from a 10-160B road cask into the hot cell.

System HV00 exhaust ventilation fans with HEPA filters are located in a first floor vault to provide a controlled containment atmosphere for the hot cell complex rooms and cells. The operating controls and monitoring instruments are located in the second floor operating gallery near the hot cell viewing shield windows except for the cask loading controls which are located in a protected shielded area with a viewing window in the northeast corner of the cask loading room.

3.4.2 Underground Disposal Arrangement

After the RH TRU waste canister or facility canister inside the facility cask is lowered to the underground horizon on the waste shaft conveyance, it is moved to a predesignated location in the underground for emplacement. Figure WH II-I-48 shows the underground disposal configuration for a canister in a horizontal borehole in the wall of a disposal room or access drift.

3.5 Component Design Descriptions

Subsystem WH03 provides the equipment for processing and handling a shielded road cask containing an RH TRU waste canister from its receipt in the WHB RH Bay, to transfer of the road cask into the shuttle car in the transfer cell for removal of the waste canister into a shielded facility cask, and emplacement in the underground. The WH03 RH TRU waste handling equipment is listed and described below for each of the following areas:

- RH Bay
- Cask Loading Room
- Underground

3.5.1 RH Bay Equipment

An overview of the hot cell equipment is shown in Figure WH-II-I-1A and RH Bay equipment is shown in Figure WH-II-I-1B.

A detailed description of the shielded road cask which is used to transport RH TRU canisters is in a subsection of the PT00 System.
Figure WH II-I-4 showing the conceptual design of the RH 72B road cask is provided to allow understanding of the interfaces for handling the cask and payload.

The RH 72B cask is a double containment shielded cask designed for over-the-road or rail transportation of one RH TRU waste canister. During transport, it is supported primarily by the transport trunnions, with additional stability provided by the handling trunnions. Foam filled impact limiters on each end must be removed during cask handling activities at WIPP prior to removing the 72B road cask from trailer. Containment is provided by an inner vessel surrounded by an outer cask. The outer cask provides lead and steel shielding. The outer cask lid (outer lid) and the inner vessel lid (inner lid) utilize o-ring seals to provide a boundary against leakage. The impact limiters and the lids are held in place by bolts arranged in circular patterns. The impact limiters are provided with lifting lugs, allowing the use of rigging for handling. The lids have "bayonet" openings in the outside center of each lid for insertion of handling fixtures. RH 72B road casks are also provided with threaded holes for insertion of lifting bolts or eyes. Each lid has special purpose port assemblies for venting, sampling, backfilling, and leak testing.

3.5.1.1

A detailed description of the 10-160B road cask which is used to transport RH TRU payloads is in a subsection of the PT00 System.
Figure WH I-I-2 showing the conceptual design of the 10-160B road cask is provided to allow understanding of the interfaces for handling the cask and payload. The 10-160B shipping cask consists of a steel and lead

cylindrical shipping cask transported in the upright position with steel encased rigid polyurethane foam impact limiters on the top and bottom.

The cask body consists of a 1-1/8-in. thick carbon steel (A516) inner shell, a 1-7/8-in. thick lead gamma shield, and a 2-in. thick carbon steel outer shell. The inner and outer shells are welded to a 5-1/2-in. thick carbon steel bottom plate. The cask cavity has an optional 12-gauge stainless steel liner. A 12-gauge stainless steel thermal shield surrounds the cask outer shell in the region between the impact limiters. The impact limiters are secured to each other around the cask by 8 ratchet binders.

The cask lid is nominally 78 in. in diameter, 5-1/2-in. thick carbon steel plate, and has a 31-in. diameter opening equipped with a secondary lid. The primary lid is sealed with a double O-ring and 24 equally spaced 1-3/4-in. diameter bolts. The secondary lid is 46 in. in diameter, is centered within the primary lid and is sealed to the primary lid by a double silicone O-ring and 12 equally spaced 1-3/4-in. diameter bolts. The spaces between the double O-ring seals are provided with test ports for leak testing the primary and secondary lid seals.

The package is equipped with four tie-down lugs welded to the cask outer shell, and two lifting lugs which are removed during transport. The lid is equipped with three lifting lugs which are covered by the top impact limiter and rain cover during transport.

The maximum quantity of material per package is as follows: Type B quantity of radioactive material not to exceed 2,000 times a Type A quantity. Decay heat not to exceed 100 watts. Total weight of contents, shoring, secondary containers, and optional shield insert not to exceed 14,500 lb. Contents may include fissile materials provided the mass limits of 10 CFR §71.53 are not exceeded. Plutonium content not to exceed .74 Tbq (20 curies).

3.5.1.2 Overhead 140/25-Ton Capacity Bridge Crane

The RH Bay is serviced by an overhead 140/25-ton capacity bridge crane. See Figure WH II-I-3 for an outline view of the crane.

The 140/25-ton crane provides horizontal and vertical handling of loads by the following crane movements:

- Hoisting
- Lowering
- Trolley north
- Trolley south
- Bridge east
- Bridge west

The crane has the following design and operating characteristics:

Main Hoist	
Load	140-ton
Span	67 ft
Lifting height	41 ft
Hoist speed	4.6 FPM max.
Trolley speed	50 FPM max.
Bridge speed	50 FPM max.
Hoist motor	60 HP
Trolley	10 HP
Bridge motor (2)	10 HP
Power supply	480V, 3-phase, 60 Hz.

Auxiliary Hoist	
Load	25-ton
Lifting height	42 ft
Hoist speed	23 FPM max.
Hoist motor	60 HP
Power supply	480V, 3-phase, 60 Hz

The crane is controlled from radio controls or a pendent control box operated from the floor of the RH Bay.

3.5.1.3 Impact Limiter Collars and Support Stands for RH 72B Cask

Two impact limiter collars are provided to protect the shielded road cask during shipment. An impact limiter collar is installed over each end of the road cask. See Figure WH II-I-4.

The impact limiter collars are removed from the shielded road cask while the cask is on the shipping vehicle using the 140/25 ton overhead bridge crane. See Figure WH II-I-5. Upon removal, the impact limiter collars are each set on separate support stands in the RH Bay.

Support stands for impact limiters are contoured to hold an impact limiter securely. The stands have roller assemblies that can be placed under the impact limiter, allowing it to roll in place for access to all areas and inspection. Impact limiters weigh approximately 2,500 pounds each, and each stand weighs 1,000 lb. See Figure WH II-I-6.

3.5.1.4 Cask Lifting Yoke for RH 72B Cask

The cask lifting yoke is used with the 140/25-ton RH Bay crane to rotate and lift the shielded road cask to a vertical position from the transport vehicle. The road cask with its payload waste canister is then moved from

the transport vehicle and placed in the road cask transfer car. See Figures WH II-I-7, WH II-I-8, and WH II-I-9.

The cask lifting yoke is a lifting fixture designed to rotate and lift the road cask by engaging the handling trunnions of the road cask. It is rated for 45,000 lb lifting capacity (cask weight is up to 40,000 lb with impact limiters removed) and it weighs about 1,500 lb gross, excluding any additional rigging.

3.5.1.5 Cask Preparation Station

The cask preparation station includes a jib crane and an elevated work platform and a hydraulic wrench system. It provides the facility and equipment needed to perform the following operations with 72B casks:

- Vent outer and inner containment vessels
- Check for contamination on cask exterior and under the outer lid
- Remove outer lid of loaded casks
- Install inner lid lift fixture and inner lid alignment tools
- Remove and install inner and outer lids of empty casks

Transfer cars carrying casks can travel through the station when going from the RH Bay to the cask unloading room. Figure WH II-I-10 shows the cask preparation station assembly.

3.5.1.6 Jib Crane

The jib crane is located east of the road cask transfer car rails and just north of the access envelope for the 140/25 ton crane. From this location it can service the cask preparation station and areas north of the work platforms where the cask lid stands are located. The crane is used to remove cask outer and inner lids, move lids to and from their storage stands and place lids back on casks. Crane operating modes include:

- Hoisting
- Lowering
- Jib rotation clockwise (or left facing crane)
- Jib rotation counterclockwise (or right facing crane)
- Trolley in
- Trolley out

The jib crane has the following design and operating characteristics:

Hoist Load	2-1/2 tons
Jib beam Span	17"
Lifting Height	15-1/2" with hook 4' from floor
Power Supply	480V, 3-phase, 60 Hz

Driver	Rating (HP)	Operating Speed	Travel
Hoist	4	20 FPM	16'
Trolley	¼	60 FPM	17'
Jib Rotation	¼	½ RPM	300 degrees

The crane is operated by a pendant control box. There are two pendants; one is at floor level and the other is on the elevated work platform. On the jib beam, an arm extends to one side for a tool balancer. See Figure II-I-11.

3.5.1.7 Elevated Work Platform

The elevated work platform consists of two decks that are approximately 6' wide by 12' long on the east and west sides of the transfer car rails. Load rating for the platforms is 125 lb per square ft. Receptacles supply 120 volt power for hand tools. Shelves and work surfaces are provided at working height for storage, radiation control tools, and instruments.

Each deck is about 10 ft high so operators can reach the 72B cask lids. Stairs provide access to each deck. In addition, a 4 ½ ft wide by 12 ft long insert is available when the 72B cask is in position to allow 360˚ access to all lid bolts. The insert is removed when the cask is moved through the elevated work platform. See Figure WH II-I-12.

The elevated work platform consists of two elevated decks, and a stairway. One of the elevated decks is stationary and the other is height adjustable. The stationary deck (lid stand platform), is set approximately 121 in. high, with the inner and outer lid stands attached facilitates 72B road cask lid storage and inspection. The moving platform has two working heights and one clearance height. The working heights will be approximately 72 in. and 121 in. for performing work on the respective road casks. The moving platform will have a removable doughnut-like insert to accommodate the different cask diameters. The clearance height will allow both road casks to enter and exit the station. The stairway will be located on the west side of the moving platform. Airlines and 120 volt receptacles are provided for powered hand tools. See Figure WH II-I-12.

3.5.1.8 Nut Runners

Hand operated torque multipliers are provided for manipulating the bolts attaching the 72B Impact Limiters and the shipping cask lid bolts. The torque multipliers operate at a maximum of 90 psi input air line pressure. Torque accuracy and repeatability is verified through a transducer mounted on the tool and electronic monitoring circuitry shutting the tool off at a predetermined and programmed torque value. Operating air is provided by plant air system CA01. The air is double filtered and regulated. Accuracy can be maintained within 1% of the programmed value. See Figure WH II-I-13.

3.5.1.9 Road Cask Transfer Cars

There are two road cask transfer cars:

- The RH 72B road cask transfer can only be used with 72B casks.
- The 10-160/72B transfer car can be used with either the 10-160B or 72B casks.

Both cars are self-propelled, rail guided and made of structural steel. Transfer of 72B road casks and 10-160B road casks from their delivery trailer to the road cask transfer car is done with the RH Bay 140/25-ton overhead bridge crane.

Both cask transfer cars have rectangular frames made of structural shapes. Each frame corner has a bracket where a standardized wheel box assembly is installed to move the car on the rails:

- At the front (or north) there are two drive wheel box assemblies.
- At the back (or south) there are two idler wheels box assemblies.

The drive wheel boxes have a direct drive electric motor with a disc brake. A power cable reel attached to the north wall of the cask unloading room holds the power and control cable for operating the car. See Figure WH II-I-14.

Only one road cask transfer car can operate on the rails at a time. Transfer cars may be removed from the rails when not in use.

- The main control console is near the southwest corner of the cask unloading room door.

Road cask transfer car rail tracks are located in the east side of the RH Bay. The north end of the rails start in the cask unloading room. The

rails run south about 80 ft, ending near the firewater trench by the south wall of the RH Bay.

3.5.1.10 RH 72B Road Cask Transfer Car

This car has two A-Frame supports with saddles at the top where 72B cask main trunnions rest. A positioning fixture near the bottom of the car locates and holds the bottom of a cask to secure it in the vertical position. This car has a load capacity of 40,000 lb and weighs about 3,500 lb empty. See Figure WH II-I-15.

3.5.1.11 10-160B/72B Road Cask Transfer Car

This transfer car can be used with either 10-160B casks or 72B casks and has a load capacity of 62,500 lb.

When the car is configured for 10-160B casks, angled guides are bolted on top of the frame. Two guides can be used at the north end or four guides can be used, with two at the north end and two at the south end. The guides center the beveled bottom of a 10-160B cask on the car. In this configuration, the car weighs about 3,000 lb. See Figure WH II-I-16.

For use with 72B casks, two A-Frame supports are bolted on top of the car frame in place of angled guides for 10-160B casks. These A-Frames are similar to ones on the other car. The main difference is that guides were added for 72B cask lower handling trunnions. The trunnions fit into the guides as the cask is being lowered onto the car, to center the cask. When the cask is resting on the car with the main trunnions in the saddles, these guides capture the lower handling trunnions to secure the cask in a vertical position. This eliminates the need for a positioning fixture like the 72B transfer car has and allows the car to be used with either type of cask. A-Frames have a load capacity of 40,000 lb and the car weighs about 4,000 lb with them installed. See Figure WH II-I-17.

3.5.1.12 RH 72B Cask Outer Lid Lift Fixtures

Two outer lid lift fixtures are provided for use with either the cask preparation station jib crane or the 25-ton hook of the overhead 140/25-ton bridge crane to remove the outer lid from the shielded road cask while it is sitting in a vertical position on the road cask transfer car. One fixture is designed for use with the jib crane and has a lower profile. The other has a taller profile and can be combined with slings for use with the 25 ton crane. The fixtures are configured for use in the RH Bay cask preparation station. It can be lowered onto the lid either with a crane or by hand. The bottom of the fixture is configured to engage the bayonet socket in the lid where it is rotated 60 degrees to engage the bayonet attachment. Two spring loaded pins on the fixture are then released into threaded holes (for lifting bolts) in the road cask outer lid prior to lifting the

lid. The pins prevent inadvertent rotation of the fixture and disengagement of the bayonet attachment. The outer lid fixture is rated to lift 4,000 lb and it weighs about 60 lb. Figure WH II-I-18 shows the road cask outer lid with the outer lid lift fixture.

3.5.1.13 RH 72B Outer Lid Storage Stand

The outer lid storage stand is used to support and store the shielded road cask outer lid after it has been removed from the road cask. The storage stand is designed to protect the road cask outer lid seal surface and to facilitate O-ring inspection and replacement.

The outer lid weighs about 1,700 lb. Figure WH II-I-19 shows the outer lid storage stand.

3.5.1.14 RH 72B Cask Inner Lid Lift Fixture

An inner lid lift fixture is provided for use with the cask loading room grapple. This allows remote removal of the lid while the cask is in the transfer cell shuttle car. Operators place the fixture on the inner lid at the cask preparation station after the outer lid is removed. The inner lid lift fixture attaches to the inner lid in the same manner that the outer lid lift fixture attaches to the outer lid. The inner lid fixture is rated to lift 4,000 lb and it weighs about 60 lb. Figure WH II-I-20 shows the road cask inner lid with the inner lid lift fixture.

3.5.1.15 RH 72B Cask Inner Lid Alignment Tool

The 72B cask inner containment vessel has a range of rotational and axial movement inside the outer containment vessel. In order for the inner lid bolt detensioning robot to locate the lid bolts, it has to know how the inner containment vessel is oriented within the outer containment vessel.

Machine vision equipment is provided for the robot to locate the bolts. The robot calculates locations of the inner lid bolts relative to reference positions in the machine vision reference frame.

A lid alignment tool is installed on the inner vessel lid and the outer vessel while the road cask is at the CPS. This tool consists of two parts that are installed together at the preparation station:

- The arm is temporarily bolted in the inner lid. It fits in only one orientation and extends out to fit into the guide.

- The guide is temporarily bolted to the outer vessel after the arm is bolted to the lid. Location of the guide is determined by location of the arm.

After the inner lid is removed remotely in the transfer cell, it may rotate slightly before it is placed back on the cask. In order to align holes in the lid with alignment pins on the cask, the two parts of the tool fit together to center and rotate the lid. To do this, the arm on the lid follows the guide as the lid is lowered. Figure WH II-I-21 shows the road cask inner lid with the inner lid lift fixture and the robot laser and 72B inner lid alignment tool.

3.5.1.16 RH 72B Cask Inner Lid Storage Stand

The inner lid storage stand is similar to the outer lid storage stand. Like the outer lid stand, it is used to support and store the inner lid for inspection or minor maintenance operations and it protects the road cask inner lid seal surface. It is sized for the smaller diameter of the inner lid which weighs approximately 1,400 lb. Figure WH II-I-19 shows the inner lid storage stand.

3.5.1.17 Cask Storage Racks

Racks are provided to store 72B casks with the impact limiters removed. The racks are designed to be used with extensions for more efficient space utilization. Saddles at the top support the main cask trunnions and hold casks in a vertical position. Guides below the saddles capture the lower trunnions as casks are lowered onto the rack. This secures the casks in a vertical position to prevent them from rotating. Racks are rated for 40,000 lb. Figure WH II-I-23 shows the cask storage racks and extensions.

3.5.1.18 RH 72B Cask Impact Limiter Storage Racks

Racks are provided to store impact limiters for casks that are on the storage racks. These are similar to the impact limiter support stands, but each rack holds two impact limiters (one cask's worth) and there is no provision to rotate the impact limiters for inspection. Impact limiters weigh about 2,500 lb. Figure WH II-I-24 shows the impact limiter racks.

3.5.1.19 RH 72B Cask Impact Limiter Storage Pallets

Pallets are also provided to store impact limiters. Pallets are similar to racks, with the difference that a pallet is smaller, lighter and holds only one impact limiter (for portability).

3.5.2 Cask Loading Room Equipment

3.5.2.1 Facility Cask

The facility cask is used to transfer the RH waste canister from the hot cell complex to emplacement underground. Figure WH II-I-25 provides an overview of the configuration of the facility cask.

The facility cask is cylindrical with powered gate shield valves at each end.

The cask body consists of two concentric steel cylinders with the annulus between them filled with lead. The inner cylinder has a 30-in. diameter and ½-in. wall thickness. The outer cylinder has an external diameter of 41-3/4 in. with a wall thickness of 5/8 in. The lead annulus is 4-3/4-in. thick. The approximate weight of the facility cask is 67,000 lb unloaded and 75,000 lb loaded (with a maximum weight waste canister of 8,000 lb).

The steel cylinders are welded to heavy end plates which form the valve housings. The valves are 8.61-in.-thick steel blocks which have guide rollers mounted along both sides to guide the blocks as they travel in their housings. Motion is achieved by an electrically driven ball screw and a fixed ball nut. Air cylinder operated lockpins are provided to lock each block in the closed position.

The cask body has two trunnions that are used to support the facility cask and two pivot pins at the top shield valve housing. The pivot pins are used in rotating the cask from a vertical to horizontal position or to upright a cask to the vertical position. There are also two sets of forklift pockets built into the cask body which are used to move the facility cask when underground with a 41-ton forklift.

The Facility Cask is credited as a design feature in the DSA. The facility cask SHALL be designed to provide a contiguous barrier between flame and WASTE containers. The design of the facility cask SHALL prevent its puncture or rupture from internally or externally generated missiles, impacts, fires, and explosions, such that WASTE remains confined within the cask during any design basis event. The robust design of the facility cask minimizes radiation exposure to the immediate worker.
[TSR DF 6.3]

3.5.2.2 Facility Cask Transfer Car

The facility cask transfer car is a self propelled, rail car. See Figure WH II-I-26 for side view of the facility cask transfer car. The facility cask transfer car:

- Operates in the cask loading room for loading a waste canister from the shuttle car into the facility cask.
- Moves onto the waste shaft conveyance.
- Is transported underground by the waste shaft conveyance.
- Proceeds away from the waste shaft conveyance underground station for facility cask pickup by a 41-ton forklift.

Waste canister loading of the facility cask from the shuttle car is accomplished with the cask vertical over the telescoping shield port. The facility car has two A-frame structures, each with a trunnion saddle to support the cask weight.

The facility cask transfer car transports the facility cask in the stable horizontal position (stable because of center of gravity relationships). It also allows rotation of the facility cask on its trunnions to the vertical position, by the facility cask rotating device. The transfer car has brackets that engage lock pins on the rotating device to prevent movement of the car while the facility cask is being rotated.

The facility cask transfer car is powered by a 7-1/2 HP, 1,750 RPM, 220-volt, 3-phase, 60-Hz motor driving the front wheels. The two front wheels are gear driven by a common shaft connected to a gear reducer that is driven by the motor. An electrical connector is provided at each end of the transfer car to connect the power and control cables. The cables are provided in reels on the east and north walls of the cask loading room. Normal facility cask transfer car operation uses the cable reel on the east wall. If the transfer car needs to be removed from the cask loading room for servicing, it can be turned 90 degrees by the turntable and moved in a north-south direction into the RH Bay using the cable reel on the north wall. The transfer car is operated from a pendent type control box that is hung on the car when not used.

The facility cask transfer car has the following operating characteristics:

- Car Speed - 0 to 30 FPM
- Electric Power Supply - 480-volt, 3-phase, 60-Hz
- Gear Reducer - 70.6 to 1
- Brake - 110-volt DC, 1 amp
- Total weight of car - 8440 lb (approx.)

The facility cask transfer car does not possess sufficient horsepower to overcome the lock pins on the facility cask rotating device.

3.5.2.3 Facility Cask Rotating Device

The FCRD rotates the facility cask from its horizontal (stable) position to an upright vertical position for cask loading from the shuttle car and back down to its horizontal position. The FCRD is shown in Figure WH II-I-27.

The FCRD is a steel framed, hydraulically operated machine mounted on the floor of the cask loading room surrounding the cask loading port. It consists of two lift arm support towers located on the north and south sides of the telescoping port shield, just outside of the rails for the facility cask transfer car. A connecting section bridges and stabilizes the two towers on the east end. The FCRD consists of the following major subassemblies:

- Hydraulic Power Unit
- Saddle
- North and South Lift Arms
- North and South Support Towers

The hydraulic power unit includes the following sub-components:

- Hydraulic oil reservoir with an integral, internally mounted electric motor driven hydraulic pump
- Manual hydraulic pump
- Hydraulic oil sight gauge and thermometer
- Low oil level sensor
- High-pressure supply and return filters with visual indicators and remote transmitters
- Single-pressure remote compensator

The hydraulic power unit is mounted on a skid with an integral oil catch pan, forklift pockets and an electrical enclosure. Quick disconnect hoses and electric cables allow the hydraulic power unit to be disconnected from the FCRD. A special jumper connector and hose allow the hydraulic power unit to be run independently from the FCRD for maintenance.

The hydraulic power unit electrical enclosure contains the main disconnect, the motor fuses, the motor contactor and overloads, a power-on pushbutton, and an emergency stop pushbutton. The 480VAC power to the FCRD is supplied via a power cable through the hydraulic power unit electrical enclosure.

Three hydraulic hoses connect the hydraulic power unit to the FCRD: a supply high pressure hose, a return high pressure hose and a return low pressure hose.

The saddle is a steel assembly that fits tightly against the facility cask top shield valve housing. It has a round opening that is large enough to

accommodate the shield bell during canister transfer operations. Two hydraulic cylinder activated rotating latch assemblies engage and hold the facility cask rotating trunnions on the top shield valve housing, locking the saddle to the facility cask. Proximity sensors on the rotating latches provide remote indication of the condition of the latches.

The saddle is connected to the north and south lift arms by connecting links which allow for the differential movement of the lift arms and the end of the facility cask caused by the difference in their center of rotation. The lift arms are supported on the west ends by the support towers. Rotational movement is allowed by bronze bushing lined bearings in the ends of the connecting links and the lift arms. Hydraulic cylinders, housed within the support towers, operate the lift arms allowing the facility cask to rotate through a full 90 degrees. Proximity sensors on the support towers provide remote indication of the full up or full down condition of the lift arms.

The lift arm support towers consist of three main subassemblies. Subassemblies A support the tower cross-connection and the saddle when the FCRD is full down (horizontal). Subassemblies B support the center trunnions on the lift arm hydraulic cylinders. Subassemblies C support the west end of the lift arms. Also housed within the bases of subassemblies C are the two facility cask transfer car lockpins and associated hydraulic cylinders. Limit switches integral to the lockpin cylinders provide remote indication of the position of the lockpins. The lockpins prevent facility cask transfer car movement during cask rotation.

An electrical enclosure mounted on the north support tower contains the master safety relay which is activated by four emergency stop pushbuttons. Indicating lights for the condition of the latches, lockpins, lift arms, filters, oil level, and power are located on the face of this enclosure, as well as a power-on pushbutton and an emergency stop pushbutton. The enclosure is positioned so that the operator at the cask loading room control panel can monitor the indicators through the shield window.

Normal operation of the FCRD is from the cask loading room control panel with sequence and interlock logic provided by the programmable logic controller.

Off-normal operation of the FCRD may result from a loss of electric power or a hydraulic component failure. A manual hydraulic pump and a manual control valve for the lift arm cylinders are provided for off-normal recovery actions required to place the FCRD and facility cask in a stable (full up or full down) condition. The electric solenoid operated control valves for the trunnion latches and the facility cask transfer car lockpins also have manual override features. In the event of a failure of one of the two lift arm cylinders or hydraulic circuits, the failed cylinder may be bypassed by operating the two associated float valves. The FCRD design allows for

holding the facility cask in place or recovering the facility cask to a stable condition using a single lift arm cylinder. Bypassing both lift arm cylinders by operating all four float valves may result in an uncontrolled rotation of the facility cask; therefore, the float valves shall be locked under administrative control. Adjustable velocity fuse valves are incorporated into the hydraulic lines to both sides of the lift arm cylinders to prevent uncontrolled, high speed movement of the lift arms. If the hydraulic oil flow through an adjustable velocity fuse valve exceeds a preset rate, as would be the case in a hose failure, the valve closes, effectively locking the cylinder in place.

When the facility cask transfer car, loaded with the facility cask, is driven into the FCRD, a proximity switch detects presence of the car frame and automatically stops the car. When the operator at the cask loading room control panel places and holds the FCRD control joystick in the raise position, the following sequence of operation occurs: a warning horn and beacon activates for approximately 5 seconds; the hydraulic power unit pump starts; the latches rotate closed around the facility cask rotating trunnions; the lockpins engage holes in the frame of the facility cask transfer car; and approximately 5 seconds later cask rotation starts as the hydraulic lift cylinders raise the lift arms. Cask rotation automatically stops when the cask reaches full up (vertical) or the operator releases the joystick. Placing and holding the joystick in the lower position causes the following sequence of operation: the warning horn and beacon activates for approximately 5 seconds, the hydraulic power unit pump starts, cask rotation starts as the hydraulic lift cylinders lower the lift arms, after the cask reaches full down (horizontal), cask rotation automatically stops, the latches rotate open to release the facility cask rotating trunnions, and the lockpins retract, disengaging the facility cask transfer car.

The FCRD has the following operating characteristics:

- Electric Power Supply - 480 Volts, 3-phase, 60 Hz
- 40-gallon capacity hydraulic reservoir
- 15 GPM pump with a 20 HP electric motor
- Nominal operating pressure -3000 psi @ 7GPM
- ISO 32 Grade Anti-wear Hydraulic Oil

3.5.2.4 6.25-Ton Grapple Hoist

The 6.25-ton grapple hoist is used to hoist the RH TRU waste canister from the shuttle car into the facility cask and includes equipment described in the following subsections and illustrated on Figure WH II-I-28.

3.5.2.4.1 Grapple Hoist

The grapple hoist is mounted on the ceiling of the facility cask loading room as shown on Figure WH II-I-28. It consists of a drive motor, cable drum, gear box, and electric brake. See Figure WH II-I-29.

The grapple hoist is rated for 6.25 tons. The cable drum sheave has an 18-in. outside diameter and is sized for single revving of 7/8-in. diameter cable. The hoist is gear driven by a two-speed, 15-HP, 120-RPM, 440-volt, three-phase, 60-Hz induction motor for operation at 8 and 24 FPM. A torque monitoring/control system is provided to indicate output torque of the motor in percent of load and to furnish a signal to shut the hoist down if the load is excessive.

3.5.2.4.2 Stationary Alignment Sheave

The stationary alignment sheave is a single cable pulley anchored to the ceiling of the cask loading room above the cask loading station. See Figure WH II-I-28.

The function of the stationary alignment sheave is to convert the horizontal travel of the hoist cable to vertical travel of the facility grapple. The cable passes over the pulley and down to the block in the top of the shield bell. The cable then extends back to the ceiling where it is attached to the tension load cell assembly which is anchored to the ceiling of the cask loading room. This arrangement provides an accurately positioned vertical lift to the facility grapple even though there is a lateral shift of the cable on the hoist drum.

3.5.2.4.3 Electric Cable Reel

The electric cable reel is a cable reel and sheave assembly that is anchored to the ceiling of the cask loading room above the cask loading station. See Figure WH II-I-28.

The cable reel provides 60 ft of 12-conductor wire for remote control operation of the facility grapple. The cable passes through the shield bell and is connected to the top of the facility grapple. An automatic spring actuated take-up rewinds the cable back on the reel.

3.5.2.4.4 Tension Load Cell and Limit Switch

A tension load cell monitors the load being lifted by the facility grapple.

A limit switch prevents the facility grapple from being raised too high.

Both the tension load cell and the limit switch are mounted and installed as a part of the stationary alignment sheave as shown on Figure WH II-I-28 and as discussed below.

The tension load cell covers a range of 0 to 20,000 lb. The tension load cell assembly is anchored to the ceiling of the cask loading room. The load cell is mounted to be readily removable for calibration or test checks through the use of removable pins.

The limit switch is mounted on a bracket attached to the pulley housing of the stationary alignment sheave. The limit switch is positioned to sense the upper travel limit of the shield bell.

3.5.2.5 Facility Grapple

The facility grapple is a special lift fixture that is designed to engage a standard WIPP pintle which has an outer diameter of approximately 9-1/8 in. and is approximately 1-½ in. tall. The grapple rated lift capacity is 21,000 lbs. See Figure WH II-I-30.

The facility grapple has an axially mounted actuator that will rotate a drive gear through a limited travel. The gear will drive three lifting lugs into or out of engagement under the circular pintle. The drive shaft has an auxiliary bevel gear which allows the grapple to be manually operated from the upper service room with a special grapple override tool if the electrical actuator fails to operate. In normal operation, the grapple must have pintle contact to open or close the grapple lift dogs.

3.5.2.6 Telescoping Port Shield

The telescoping port shield has four basic components:

- Upper ring which has an outside diameter of 95 in.
- Lower ring which has an outside diameter of 72 in. and suspended from the upper ring.
- Motor driven ball screw jacking system which raises and lowers the traveling shield ring. Integral limit switch within the ball screw jacking system provides a “Fully Up” indication at the main CTS control panel.
- Traveling shield ring which is 27 in. deep, and has an outside diameter of 54 in., and an inside diameter of 36 in., through which the waste canister passes.

The telescoping port shield is shown in Figure WH II-I-31. It is mounted in the floor of the cask loading room and centered over the shuttle car.

3.5.2.7 Shield Bell and Block

The shield bell and block are shown in Figure WH II-I-32. The shield bell is a heavy-walled steel casting that is used to shield the waste canister when the facility cask top shield valve is open. When lowered the bell rests on the facility cask in the cask loading room. See Figure WH II-I-28.

The shield bell has internal cavities to house the facility grapple and the grapple support block. The grapple cavity is 18.25 in. in diameter. The block cavity is a modified tee-shaped cavity, nominally 6 in. wide, to house the single pulley block and provide a path for the grapple electrical cable to pass through to the grapple. There are three penetrations with bronze bushings through the top of the bell to facilitate the passing of the 7/8-in. diameter wire rope and electric cable travel through the penetrations. When the shield bell is not resting on the facility cask, it rests on the top of the grapple support block.

The block is a single wire rope pulley sheave with an extended housing that forms a yoke to support the lifting lug of the facility grapple. The block and grapple, when pinned together, can pass down through the bell and facility cask to engage a waste canister and draw it up into the cask.

During transfer of the waste canister from the shuttle car to the facility cask, shielding integrity is maintained by the sequential operation of the following:

- Shield Bell
- Telescoping port shield ring
- Transfer cell shield valve (WH05)
- Facility cask shield valves.
- Interlocks are provided to indicate shielding configuration

When the facility cask is in position over the port, the jacking system raises the telescoping port shield ring to contact the bottom of the cask. This provides a shielded path from the canister shuttle car into the cask through which the waste canister can be moved. The telescoping port shield and transfer cell shield valve provide the interface between the facility cask in the cask loading room and the shuttle car in the transfer cell. The transfer cell shield valve, and actuator are described in Section 3.5.1.3.4 of WH05 (Part II Chapter II).

3.5.2.8 Facility Cask Turntable

The facility cask turntable is a section of rail that rotates to guide the facility cask transfer car to the RH Bay or the waste hoist shaft from the cask loading room. See Figure WH II-I-33.

The facility cask turntable is mounted on a circular platform that is supported by four air bearings recessed into the floor of the cask loading room. When the air bearings are activated, the turntable and cask transfer car can be rotated 360 degrees by hand to change the direction of travel for the car.

3.5.2.9 Control Console

The overall operation of transferring a waste canister out of the road cask or shielded insert into the facility cask is performed at the control console located in a shielded area with a viewing window in the northwest corner of the cask loading room. See Figure WH II-I-33.

The cask loading room operator control console is a floor mounted console with operator control switches, indicators, and a TV monitor. See Figure WH II-I-34 and WH II-I-35.

The controls, indicators, and TV monitor enable the operator to perform the following functions:

- Position the shuttle car under the cask unloading room floor shield valve for receiving the RH 72B road cask or the shielded insert.
- Position the shuttle car under the Hot Cell port for receiving a canister from the Hot Cell into the shielded insert or positioning the 72B Road Cask for loosening the RH 72B road cask inner lid bolts by the detensioning robot.
- Position the shuttle car under the telescopic shield port in preparation for removing the RH 72B road cask inner lid and a waste canister.
- Position the shuttle car lid platform under the telescoping shield port in preparation for storing or retrieving the RH 72B road cask inner lid.
- Rotate the facility cask to the vertical position using the facility cask rotating device.
- Lower the shield bell and block onto the top of the facility cask.
- Raise or lower the shield ring of the telescoping port shield .
- Open and close the facility cask top and bottom shield valves.
- Raise or lower the facility grapple.

- Open or close the transfer cell shield valve (WH05).
- Engage or disengage a waste canister pintle with the facility grapple.
- Initiate the detensioning robot to de-tension the 72B Road Cask inner vessel lid bolts.
- Initiate the swipe robot to perform lid and canister swipes.

3.5.3 Underground Equipment

3.5.3.1 Horizontal Emplacement and Retrieval Equipment

When assembled, the HERE is used to transfer an RH TRU waste canister from a shielded facility cask into a horizontal underground borehole. The HERE also has the capability to retrieve an emplaced waste canister and the borehole shield plug. The HERE includes the waste transfer equipment and the borehole related components as listed and described below:

Waste Transfer Equipment	Borehole Related Components
● Alignment Fixture	● Supplemental Shielding Rings
● Shield Collar	● Shield Plug
● Leveling Platform	● Stop Bar
● Staging Platform	
● Transfer Carriage	
● Shield Plug Carriage	
● Strongback	
● Control Console	
● Portable Power Cable	
● Transport Equipment	

The waste transfer machine, facility cask, and alignment fixture assembly are hydraulically coupled and move basically as one piece.

3.5.3.1.1 Alignment Fixture Assembly

The alignment fixture assembly (AFA) consists of the alignment fixture and shield collar.

3.5.3.1.1.1 Alignment Fixture

The alignment fixture provides a reference plane for aligning the waste transfer machine with respect to the borehole to allow waste canister and

shield plug installation and retrieval. Figure WH II-I-36 shows the alignment fixture.

The alignment fixture is a welded carbon steel structure consisting of a base plate with three hydraulic jacks, and a vertical face plate with holes for attaching and bolting the shield collar. There are two forklift pockets for moving the fixture. The horizontal base of the fixture serves to support the front end of the waste transfer machine. The two alignment pins are located to ensure that the waste transfer machine and shield collar line-up.

The leveling hydraulic jacks are used to realign the alignment fixture with the borehole in case an adjustment has to be made. The hydraulic jacks are driven by a 3-ph, 480-volt, 15-hp. hydraulic pump with a custom-built 30-gallon hydraulic tank on the Alignment Fixture Assembly. Each hydraulic jack has a maximum stroke of 10 in.

Three tilt sensors and three proximity switches are provided. The tilt sensors provide tilt information to permit the operator to realign the alignment fixture. The proximity switches are provided to sense the gap between the proximity switch and the facility cask.

The Alignment Fixture Assembly has four (4) hydraulic locking clamps rated at 3600 psi, to rotate and lock the Shield Collar to the Facility Cask. These 4 locking clamps are controlled by a selector switch located on the control console and are powered by the 15-hp hydraulic power unit located on the alignment fixture.

The Alignment Fixture Assembly has an automatic/manual fire-suppression system with 4 discharge nozzles aimed at the hydraulic power unit and hydraulic jacks.

The underground waste handling equipment automatic/manual fire suppression system provides a dry chemical fire suppressant available to extinguish equipment fires associated with hydraulic/fuel line leaks and the equipment engine. The system is comprised of electric powered detection capability, and a compressed nitrogen gas cartridge that, when actuated, fluidizes the fire suppressant powder and forces the powder to the distribution network. The system is equipped with a control module that includes system status lights to indicate normal and trouble conditions, and a provision to test the status lights. The system automatically actuates when the detection circuit shorts due to heat generated by fire causing current to a squib. The squib is an electrically actuated component containing a small charge of powder which forces a pin to puncture the cap/seal on the compressed nitrogen gas cartridge. The gas is directed via tubing to the fire suppressant container where the suppressant is fluidized and dispersed into the distribution piping. The system also has a manual capability that bypasses the squib such that the manual actuator forces the pin to break the cap/seal on the compressed

gas nitrogen cartridge. The control module includes status lights that indicate that the system is not discharged and that the detection circuit is functioning properly. The control module is mounted such that the operator of the waste handling equipment can see the system status indication.

The underground waste handling equipment automatic/manual fire suppression system is designed, installed, tested, and maintained according to the national Fire Protection Association (NFPA) Standards NFPA 17, Standard for Dry Chemical Extinguishing Systems. The automatic/manual fire suppression system on the underground waste handling equipment is credited in the DSA. The fire suppression system on the WASTE HANDLING EQUIPMENT selected for use SHALL be OPERABLE. An OPERABLE fire suppression system consists of the following elements. **[TSR LCO 3.1.2]**

- A charged fire suppressant system;
- Detection circuit is IN-SERVICE.

Each Shift, the fire suppression system on the WASTE HANDLING EQUIPMENT selected for use is verified to have not discharged. **[TSR SR 4.3.2.1]** Fire suppression system trouble lights are verified to not be illuminated, using the following procedures: **[TSR SR 4.3.2.3]**

- WP 05-WH1601, 20-Ton Diesel Forklift 52-H-125
- WP 05-WH1602, 41-Ton Diesel Forklift 52+H-005A
- WP 05-WH1711, 6-Ton Toyota Forklift 52-H-007C

Semiannually, the fire suppression system controls on the WASTE HANDLING EQUIPMENT are tested using WP 12-FP0060, Semi-Annual Test of Automatic Fire Suppression for Diesel Powered Waste Handling Equipment. **[TSR SR 4.3.2.2]**

3.5.3.1.1.2 Shield Collar

The shield collar is a carbon steel shield section used when emplacing a waste canister and shield plug into a borehole. The shield collar is attached to the alignment fixture and is inserted into the counterbore in the borehole to limit the dose rate during emplacement operations. Figure WH II-I-37 shows the alignment fixture with a shield collar.

The shield collar is 29 in. long with an outside diameter of 44 in. and a 7 in. wall thickness. A 1 in. thick mounting ring with a 62-in. diameter is welded to the outside of the collar. This mounting ring has twelve 1.12-in.-diameter holes which are used to bolt the shield collar to the alignment fixture. The shield collar weighs approximately 6,800 lb.

3.5.3.1.2 Waste Transfer Machine

The waste transfer machine is shown in Figure WH II-I-38 and includes the following three basic components:

- Leveling platform
- Staging platform
- Transfer carriage

The assembled waste transfer machine is designed to be lifted and moved by a 20-ton forklift using the forklift pockets of the leveling platform.

3.5.3.1.2.1 Leveling Platform

The leveling platform, shown on Figure WH II-I-39, is a fabricated steel frame on which is mounted the operating and accessory components to operate and interface with the alignment fixture and staging platform. The leveling platform is approximately 300 in. long, 113 in. wide, and 24 in. high.

The front end of the leveling platform has two alignment holes that interface with and sit on the alignment fixture alignment pins. A motor driven hydraulic pump operates a hydraulic jack, which is located at the rear of the leveling platform. This jack is used to align the waste transfer machine axis with the axis of the Alignment Fixture Assembly Shield Collar.

The leveling platform hydraulic jack is a telescoping double acting jack with a 10-in. throw, operating at 2800 psi with a travel speed of .3"/sec. The hydraulic power unit for this leveling jack is located on the Transfer Carriage, using quick disconnect hose connections via a movable cable tray assembly to protect the hose.

Three sets of rails are provided on each side of the leveling platform. These rails support the staging platform and interface with roller bearings on the staging platform to permit the staging platform to travel on the rails. A staging platform drive system is mounted on the leveling platform. This drive system moves the staging platform in the forward and reverse direction to position the front face of the facility cask against the shield collar. The drive system consists of a traveling nut on a screw arrangement with the screw driven through a reduction gear by a 1/4 HP, 115 volt, 1 ph, 1750 RPM motor to provide a travel speed of 6.7 in. per minute.

3.5.3.1.2.2 Staging Platform

The staging platform, shown in Figure WH II-I-40, is a steel fabricated frame that rests on roller bearings which engage and ride on the rails of

the leveling platform. The staging platform supports the facility cask and transfer carriage and a hydraulic ram providing linear motion to the transfer carriage. The overall length of the staging platform is 288.5 in.

The transfer carriage rides on two 123.5-in.-long rails which are bolted to the top of both sides of the staging platform. The transfer carriage drive mechanism is a telescopic hydraulic position cylinder operating at 2000 psi maximum, with variable speed control capability.

A tilt sensor, a rotary limit switch, and two position detection limit switches are mounted on the staging platform. The function of these devices is as follows:

- The tilt sensor is used to monitor the longitudinal tilt of the assembled waste transfer machine for alignment with the alignment fixture.

- The rotary limit switch is used to stop the transfer carriage forward and reverse travel motion before the travel limits have been reached.

- The two position detection limit switches are activated when the shield plug carriage is seated on the staging platform rails to provide interlocks.

A regulated air supply of compressed air is attached to the staging platform for operating pneumatically activated facility cask lock pins. The regulated air supply system consists of a two stage pressure regulator with a delivery pressure of 0-150 psig and a built in relief valve, two control solenoid valves, quick-disconnect fittings, and ½-in. steel tubing and hoses.

3.5.3.1.2.3 Transfer Carriage

The transfer carriage, see Figure WH II-I-41, is a large hydraulic cylinder with its own hydraulic system that is used to push a RH TRU waste canister from the facility cask into a borehole or pull a waste canister from a borehole into the facility cask.

The rear end of the transfer carriage houses the transfer mechanism and includes heavy wall shielding to prevent exceeding radiation dose rate limits when the facility cask top shield valve is opened. The transfer carriage housing is a steel cylinder with a 30-in. inside diameter and 91-1/4 in. long. The hydraulic drive system components to operate the transfer mechanism are mounted within or on the transfer carriage housing. The transfer mechanism and grapple provide the capability for transferring a waste canister from the facility cask into a borehole and vice

versa. The transfer mechanism also provides the same capability for shield plug emplacement and retrieval.

The carriage has roller bearings which ride on the staging platform rails. The staging platform's rotating screw and traveling nut drive system moves the transfer carriage forward and reverse to emplace or retrieve a waste canister. The transfer carriage is positioned with the front of the housing against the facility cask during emplacement or retrieval of a waste canister. During shield plug emplacement or retrieval, the transfer carriage is retracted to provide room for installing the shield plug carriage on the staging platform.

The transfer mechanism consists of a double acting five stage, telescopic, hydraulic cylinder attached at the plunger end to the transfer carriage housing end plate. The front end of the cylinder is supported on two roller assemblies attached to a 2 3/4 inch thick steel plate. The plate supports the grapple and also provides shielding. The hydraulic cylinder has a 10,000-lb min. load capacity, a stroke of 24 ft, and a retracted length of 70 in.

The hydraulic drive system pump is a 7.8 gpm pressure compensated pump at 3600 psi and with a 15 HP, 460 volt, 3 phase, 60 Hz motor. If electric power is lost, manual means are provided to retract the transfer mechanism from a partial or fully extended position and also to release the grapple. This is accomplished by the use of wire rope and torque reels as shown in Figure WH II-I-42. Two torque reel are used for the transfer mechanism retraction and one torque reel for the grapple release.

The transfer carriage is equipped with four (4) locking clamps to clamp the carriage to both the Facility Cask and the Shield Plug Carriage. These clamps operate at a pressure of 3450 psi, three clockwise rotations and one counterclockwise rotation.

The grapple mounted on the transfer mechanism front plate is used to engage the pintle of the waste canister or shield plug when conducting a retrieval operation. The grapple jaws are activated by a screw jack driven by a 1/4-HP, 115-volt, single-phase, 60-Hz, 1,750-RPM motor through a reduction gear. The jaws of the grapple have a stroke of 2-1/4 in. and move from full open to full closed in 10 seconds. See Figure WH II-I-43.

The following position sensors are provided and mounted on the transfer carriage:

- Two spring-loaded reel type mechanisms attached to multi-turn rotary potentiometers monitor the linear travel distance of the transfer carriage for position indication. The accuracy of the measurement over the 264 in. of travel is ±0.72 in.

- Three proximity metal detecting switches that activate and indicate when the transfer carriage is within 0.50 in. of the facility cask to stop the carriage drive.

- Two grapple mounted induction proximity detection switches, one for the canister and one for the shield plug, to detect when the grapple comes in contact with the pintle of the waste canister or shield plug.

- Two position limit switches to indicate when the two grapple jaws are open and closed. The jaws drive motor is stopped when the limit switches reach the open and close limits.

3.5.3.1.3 Shield Plug Carriage

The shield plug carriage is a semicircular saddle which holds the shield plug in a horizontal position during emplacement and retrieval operations and aligns the bottom of the shield plug with the bottom of the facility cask cavity. The shield plug carriage, shown in Figure WH II-I-44, is placed on and supported by the rails of the staging platform which also supports the transfer carriage.

The shield plug carriage is 68 in. long with a ½-in. wall thickness. It has four roller bearing supports that interface with and ride on the staging platform rails. Two forklift pads are provided to permit lifting and handling the shield plug carriage by forklift truck.

3.5.3.1.4 Control Console

The control console for the waste transfer machine provides all the controls and information displays to operate the waste transfer equipment. The console is connected by plug-in disconnect cables and mounted on a moveable platform truck to facilitate relocation when the waste transfer machine is moved. The cables are 25 ft long to permit locating the console a sufficient distance from the waste transfer machine to ensure proper shielding distance for the console operator.

Each step in the operational sequence is initiated or controlled by the operator through a programmable controller mounted within the control console. The programmable controller incorporates the interlock functions to ensure proper sequence of operations. Figure WH II-I-46 provides the layout of the operator controls and displays.

3.5.3.1.5 Portable Power Cable

A portable plug-in power cable is provided to electrically connect the HERE to a 480-volt, three-phase, 60-Hz underground power supply.

When the HERE is to be moved to another location, the cable is disconnected and reconnected at the new location.

3.5.3.1.6 Transport Equipment

Towing equipment, shown is Figure WH II-I-47, is used to transport the waste transfer machine from one location to another in the underground. The towable transport equipment consists of two identical removable rigid (non-steerable) axle assemblies and a removable steering assembly. A forklift or tractor is used to pull the assembly.

3.5.3.1.7 Shield Plug

The shield plug is inserted into the borehole after emplacement of the waste canister. It provides the necessary shielding for the exposed end of the borehole. Figure WH II-I-30 shows the shield plug installation.

Shield plugs are approximately 29 inches in diameter and approximately 69 inches long, including the pintle. It is a cylinder with approximately .25 inch thick steel shell filled with concrete material for shielding. Each shield plug has integrated fork pockets and weights approximately 4,000 lbs.

The pintle is a standardized configuration. It is used for handling and for interface with the HERE. Pintles are removable and reusable.

The HERE is used to emplace both a shield plug and a canister. Both are emplaced in the same way. When a shield plug is emplaced, the pintle end is exposed at the open end of the borehole. After emplacement, the pintle is then removed for reuse.

3.5.3.1.8 Supplemental Shielding Rings

Layers of steel shielding are provided to supplement shield plugs. The layers are made from 1/4" or 1/8" thick carbon steel plate. They have a circular shape slightly larger in diameter than the shield plug (see Figure WH-II-I-45). By covering the gap between the top and sides of a shield plug and the borehole, they limit exposure where the greatest potential exists in a storage room. (See Figure II-I-49)

Shielding layers are configured with an opening in the center that fits over a shield plug center pipe assembly. Areas of the shielding layers that do not contribute to the shielding function have cut outs to minimize weight so operators can place them on the shield plug pipe quickly. After placement, the supplemental shield rings are fixed in place by use of an “L” shaped retainer pin placed through a hole in the pintle attachment pipe of the shield plug.

3.5.3.1.9 41-Ton Capacity Forklift

The 41-ton forklift is a diesel-powered truck that is used to transport the facility cask underground and place it on the HERE, and to transport the waste transfer machine. The forklift has controls for lifting, tilting, fork positioning, and side-shift on both forks.

The forklift has the following features:

Lifting capacity .....82,000 lb at 48-in. load center
Maximum lift height .....99 in.
Fork size .....66 in. long x 12 in. wide x 6 in. thick
Fork spacing (center-to-center) .....72 in. on center
Weight .....110,700 lb

The forklift has air brakes, hand operated spotting brake, and a mechanical parking brake. The mast includes side-shift capability of 9 in. in each direction. The forklift has two speeds, low and a road speed, and the transmission is equipped with an inching control mechanism.

The 41-Ton capacity forklift has automatic/manual fire suppression capability. **[TSR LCO 3.1.2]** A description of the automatic/manual fire suppression system is provided in Section 3.5.3.1.1.1. An on-board battery charger is supplied to minimize battery drain during prolonged periods of forklift inactivity.

The UNDERGROUND LIQUID-FUELED VEHICLES (41-ton capacity forklift) SHALL be designed to prevent and/or mitigate fires. The design includes fuel tanks and fuel delivery systems within the metal body of the vehicle, metal hydraulic fluid reservoirs and reinforced hydraulic delivery systems. In addition, UNDERGROUND WASTE HANDLING EQUIPMENT contains hydraulic fluid with high ignition temperatures. **[TSR DF 6.6]**

Each Shift, liquid-fueled vehicles/equipment (41-ton capacity forklift) selected for use for Waste Handling are verified to have no excessive leaks (i.e., battery compartment, hydraulic lines, fuel lines) as indicated by visible flow of fluid under pressure, puddles beneath the equipment, or abnormal loss of hydraulic fluid; proper fluid levels (i.e., engine oil, transmission fluid, hydraulic fluid, and brake fluid), and lights and horn are IN-SERVICE , using the following procedure: **[TSR SAC 5.1.1.2]**

- WP 05-WH1602, 41-Ton Diesel Forklift 52-H-005A

3.5.3.1.10 20-Ton Capacity Forklift

The 20-ton capacity forklift is a diesel powered forklift similar to the 41-ton forklift. The 20-ton forklift can be used to lift and handle the AFA and the waste transfer machine.

The forklift has the following features:

Lifting capacity .....40,000 lb at 42-in. load center
Maximum lift height .....84 in.
Fork size .....60 in. long x 9.5 in. wide x 3.75 in. thick
Fork spacing (center-to-center) .....60 in. to 116 in/on center
Weight .....73,600 lb

The 20-Ton capacity forklift has automatic/manual fire suppression capability. **[TSR LCO 3.1.2]** A description of the automatic/manual fire suppression system is provided in Section 3.5.3.1.1.1. An on-board battery charger is supplied to minimize battery drain during prolonged periods of forklift inactivity.

The UNDERGROUND LIQUID-FUELED VEHICLES (20-ton capacity forklift) SHALL be designed to prevent and/or mitigate fires. The design includes fuel tanks and fuel delivery systems within the metal body of the vehicle, metal hydraulic fluid reservoirs and reinforced hydraulic delivery systems. In addition, UNDERGROUND WASTE HANDLING EQUIPMENT contains hydraulic fluid with high ignition temperatures. **[TSR DF 6.6]**

Each Shift, liquid-fueled vehicles/equipment (20-ton capacity forklift) selected for use for Waste Handling are verified to have no excessive leaks (i.e., battery compartment, hydraulic lines, fuel lines) as indicated by visible flow of fluid under pressure, puddles beneath the equipment, or abnormal loss of hydraulic fluid; proper fluid levels (i.e., engine oil, transmission fluid, hydraulic fluid, and brake fluid), and lights and horn are IN-SERVICE , using the following procedure: **[TSR SAC 5.1.1.2]**

- WP 05-WH1601, 20-Ton Diesel Forklift 52-H-125

3.5.3.1.11 6-Ton Forklift

The 6-ton capacity forklift is a diesel powered forklift used to transport the shield plug carriage and shield plugs.

The forklift has the following features:

Lifting capacity .....12,000 lb at 24-in. load center
Maximum lift height .....72 in.
Fork size .....48 in. long x 6 in. wide x 2.5 in. thick
Weight .....20,650 lb

The 6-Ton capacity forklift has automatic/manual fire suppression capability. **[TSR LCO 3.1.2]** A description of the automatic/manual fire suppression system is provided in Section 3.5.3.1.1.1.

The UNDERGROUND LIQUID-FUELED VEHICLES (6-ton capacity forklift) SHALL be designed to prevent and/or mitigate fires. The design includes fuel tanks and fuel delivery systems within the metal body of the vehicle, metal hydraulic fluid reservoirs and reinforced hydraulic delivery systems. In addition, UNDERGROUND WASTE HANDLING EQUIPMENT contains hydraulic fluid with high ignition temperatures. **[TSR DF 6.6]**

Each Shift, liquid-fueled vehicles/equipment (6-ton capacity forklift) selected for use for Waste Handling are verified to have no excessive leaks (i.e., battery compartment, hydraulic lines, fuel lines) as indicated by visible flow of fluid under pressure, puddles beneath the equipment, or abnormal loss of hydraulic fluid; proper fluid levels (i.e., engine oil, transmission fluid, hydraulic fluid, and brake fluid), and lights and horn are IN-SERVICE , using the following procedure: **[TSR SAC 5.1.1.2]**

- WP 05-WH1711, 6-Ton Toyota Forklift 52-H-007C

3.6 Instrumentation and Control

This section describes the Instrumentation and Control (I&C) and control interlocks associated with the RH TRU waste handling system. The following is a summary listing of the range, accuracy, and set points of the instruments.

INSTRUMENT	RANGE	ACCURACY	SET POINT
6.25-Ton Crane Load Cell (for weight indication and Heavy Light Alarm	0 - 20,000 lb	load cell ± 4 lb system ± 10%	Lid Bread Free/Canister Weight – 2,600 lb Heavy weight 9,600 lb
Cask Prep. Station 2 ½ Ton Jib Crane Load Cell	0 – 5,000 lb	± 5 lb	N/A
6.25-Ton Crane Position Microprocessor	16 Programmed Position Limit Switches	± 2.5%	Positions A – H
Lockpin Pressure Available Pressure Switch	3 150 psi	± 10%	> 40 psi
Lift Cylinder Shuttle Valve Pressure Gauges	0 – 3,000 psi	± 10%	N/A
Cushion Lock Return Pressure Gauges	0 - 500 psi	±10%	N/A
Air Off Top Shield-Pressure Switch	3 – 150 psi	± 10%	< 10 psi
Air Off Bottom Shield-Pressure Switch	3 – 150 psi	± 10%	< 10 psi
Alignment Fixture Tilt Sensor	± 6 Deg	± .2%	N/A
Alignment Fixture Proximity Sensor	0.5 in.	0.005	0.25 in.
Staging Platform Tilt Sensor	± 6 Deg	± .2%	N/A
Transfer Carriage Hydraulic Pressure Indicator	0 – 3,000 psi	N/A	N/A
Transfer Carriage Hydraulic Pressure Switch	0- 3,000 psi	± 1%	2,500 psi
Transfer Carriage Position	0 – 350 in.	± 1 in.	Linear
Transfer Carriage Proximity Switch	Later	.005 in.	0.25 in.
Transfer Carriage compressed Air Gauge	0 – 200 psi	± 10%	N/A

The WH03 encompasses RH waste handling equipment from the incoming transportation to the road cask unloading room and the cask loading room to underground disposal. Table II-I-1 provides a list of the WH03 I&C equipment items. A brief discussion of each of the listed items follows.

Table II-I-1 - I&C Equipment for WH03

140/25-Ton Crane
- Main hoist up limit switch
- Auxiliary hoist up limit switch
- Main hoist down limit switch
- Auxiliary hoist down limit switch
- Trolley travel limit switch
- Bridge travel limit switch

Cask Preparation Station 2-1/2 Ton Jib Crane
- Hoist up limit switch
- Jib left rotation limit switch
- Jib right rotation limit switch
- Hoist load cell

Road Cask Transfer Cars
- End of travel limit switch
- Road cask transfer car control panel
- Fast speed light
- Slow speed light
- In light
- Out light
- Speed selector switch
- In-out selector switch
- Run switch

6.25-Ton Grapple Hoist
- Hoist load cell
- Hoist up limit switch
- Hoist position transmitter
- Hoist motor torque limiter

Facility Cask
- Shield valve Lock pin retracted limit switches
- Shield valve Lock pin inserted limit switches
- 2 Shield valve closed limit switches
- 2 Shield valve open limit switches
- 2 Shield valve motor torque limiters
- 2 Shielding contact switches

Facility Cask Rotating Device
- Low oil level switch
- Oil reservoir level sight gauge
- High-pressure supply filter D/P switch

- Low-pressure return filter D/P switch
- North arm full down proximity switch
- South arm full down proximity switch
- Full up proximity switch
- South lock extended limit switch
- North lock extended limit switch
- South lock retracted limit switch
- North lock retracted limit switch
- South latch extended proximity switch
- North latch extended proximity switch
- South latch retracted proximity switch
- North latch retracted proximity switch
- Car present proximity switch
- Lift Cylinder Shuttle Valve pressure gauges
- Cushion Lock return pressure gauges

Facility Grapple and Shield Bell

- Grapple open proximity switch
- Grapple closed proximity switch
- Grapple pintle detect proximity switch

Telescoping Port Shield

- Shield down limit switch
- Shield up limit switch

Cask Loading Room Control Panel

See Figure WH II-I-18

Alignment Fixture

- 6 jack travel limit switches
- 2 tilt sensors
- ·3 proximity switches

Waste Transfer Machine

- 2 jack travel limit switches
- Platform travel limit switch
- Tilt angle sensor
- Transfer carriage travel limit switch
- 2 shield plug carriage limit switches
- Oil pressure transmitter
- Oil pressure switch
- Pintle contact limit switch
- 2 grapple jaw open limit switches
- 2 grapple jaw closed limit switches
- 2 carriage position potentiometers
- position proximity switches

- Liquid level site glass
- Air pressure indicator
- Oil Pressure Gauge

3.6.1 I&C for the 140/25-Ton Capacity Overhead Bridge Crane

The 140/25-ton capacity overhead bridge crane has standard bridge, trolley, and hoist controllers mounted on the bridge structure that are powered from the 480 volt, 3 phase, 60 cycle of system ED00. The main hoist has a limit switch mounted on the trolley that is actuated by a paddle that is actuated by the hoist block to prevent overtravel in the up direction. The geared limit switch prevents over travel in the downward direction. The auxiliary hoist has similar limit switches.

The trolley has a limit switch mounted in the center of the trolley that is actuated by a mechanical stop mounted on each end of the bridge. This limit switch prevents trolley overtravel in each direction.

The bridge has a limit switch mounted on the crane near one of the crane bridge girders above the support rails. This limit switch is actuated by a cam mounted on each end of the support rails. This limit switch stops the main hoist hook approximately 8 ft from each wall.

3.6.2 I & C for the Cask Preparation Station 2-1/2 Ton Jib Crane

The 2-1/2 ton jib crane is made of standard components and uses 480 volt, 3 phase 60 cycle power supplied by ED 00.

The crane boom and head piece at the top of the mast are rotated by a motor with a chain drive. Rotational motion range is limited to about 300 degrees by a rotary limit switch to prevent contact with the building structure.

The hoist is driven by an integral trolley drive system. Motors drive trolley wheels on the bottom flange of the crane boom. The wheels ride on the upper side of the flange for a 17' range of motion from the mast to the end of the boom. Hard stops limit hoist travel in each direction.

Hoist overtravel in the up direction is prevented by a limit switch that is activated by contact with the hook block. Overtravel in the down direction is prevented by a geared limit switch. This limit is set to prevent the outer lid lift fixture from contacting the floor.

A load cell is used to avoid exceeding lid removal forces specified in the 72B cask SARP when cask lids are being removed.

3.6.3 I&C for the Road Cask Transfer Cars

Automatic stops are provided to position the road cask transfer cars properly. In the cask unloading room, stop positions are north of the hot cell transfer port for the 72B transfer car, and centered under the hot cell transfer port for the 10-160B/72B transfer car.

In the RH Bay, stop positions for both transfer cars are the same; in the cask preparation station and south of the prep station, within the range of the 140/25-ton crane. The cask preparation station is used for 72B and 10-160B shipping cask operations.

The limit switch is an infrared transmitter and receiver mounted on the car that actuates when its transmitted signal is reflected by reflective tape on the floor. The tape is positioned so that the car stops at the correct position with the car traveling at fast speed when the infrared limit switch senses the reflective tape.

Because there are differences in stop locations for the 72B road cask transfer car and the 10-160B/72B transfer car, reflective tape for the 72B transfer car is located next to the east rail, and reflective tape for 10-160B/72B transfer car is located next to the west rail.

There are two operator control panels for the road cask transfer car. Each panel has five lights. There are two white lights labeled "Fast" and "Slow." These lights indicate the speed selected by the speed selector switch. There are two additional white lights labeled "In" and "Out" that indicate the direction selected by the direction selector switch. When the "Run" joy stick is operated the transfer car will run in the direction and speed indicated by the white lights.

3.6.4 I&C for the Cask Loading Room

3.6.4.1 I&C for the 6.25-Ton Capacity Grapple Hoist

A load cell is provided between the rope termination and the ceiling. This load cell provides an indication signal proportional to the load that is used in the control system. See paragraph 3.6.4.5 below for additional information regarding how the output from this load cell is used.

A top limit switch is used to stop the hoist before the lift block reaches the fixed sheave support assembly. The limit switch is mounted on the sheave assembly and is actuated by the block as it nears its top position.

A hoist position transmitter is driven by the drum through a gear reduction box so that position can be inferred by counting the number of drum revolutions. This position signal is used in various ways by the control

system. See paragraph 3.6.4.5 for additional information regarding how this position information is used.

A torque limiter is attached to the hoist motor that measures the combination of motor speed, voltage and current to calculate the torque developed by the motor. If the torque is excessive the hoist motor is de-energized and the brake set.

3.6.4.2 I&C for the Facility Cask

Top and bottom shield valve locking pin limit switches are provided. These limit switches (8) indicate when the shield valve locking pins are retracted or inserted.

Top and bottom shield valve limit switches are provided. These limit switches (4) indicate when the shield valves are open or closed.

There are shielding contact proximity switches, two (2), mounted in the face of each shield valve housing. These switches indicate when the shield valve is in contact with the top shield valve housing and when the telescoping port shield ring is in contact with the bottom shield valve housing.

3.6.4.3 I&C for the Facility Grapple and Shield Bell

A grapple closed proximity switch is provided. This proximity switch is mounted on the grapple head and indicates when the lifting lugs have shut completely.

A grapple open proximity switch is provided. This proximity switch is mounted on the grapple head and indicates when the lifting lugs have opened completely.

A grapple pintle contact proximity switch is provided that is mounted in the face of the grapple. This proximity switch will actuate when the grapple is in contact with the pintle and in the proper position to close the grapple.

3.6.4.4 I&C for the Telescoping Port Shield

There are limit switches mounted above and under the cask loading room floor. The limit switches are actuated by the shield ring and indicate when the telescoping shield is fully up and fully down.

3.6.4.5 Cask Loading Room Console

The cask loading room console (see Figure WH II-I-18) has indicators and controls as described below.

The grapple hoist position is calculated by a microprocessor in the console that receives its signal from the hoist position transmitter (see Section 3.6.4.1). Each position corresponds to a physical grapple position as indicated below:

Position	Function
A	Grapple in its maximum up position.
B	Shield bell on top of facility cask.
C	Grappled canister is slight raised above the facility cask bottom shield valve.
D	Canister resting on facility cask bottom shield valve.
E	Shield bell resting on top of raised telescoping port shield or canister in position for a side swipe.
F	Road cask inner list above Transfer Cell shield valve or canister in position for a side swipe.
G	Grapple in contact with road cask inner lid in both the normal and lid storage positions.
H	Grapple in contact with pintle of canister inside road cask or shielded insert.
EE	Canister in position for bottom swipe.
FF	Road cask inner lid in position for lid bottom swipe and canister top swipe.
GG	Canister in position for top side swipe.

Grapple hoist positions are indicated by the indicating lights on the control panel. In addition, a reference is also provided through the digital data display unit on the upper portion of the control panel.

There is a hoist load indicator that indicates digitally the total weight on the facility cask hoist. The input for this readout is the load cell between the hoist rope termination and the ceiling.

There is a "Hoist Load Heavy" red light that energizes when the load on the hoist exceeds the set point. This signal stops hoist movement in the upward direction.

The position B "Bell" light is energized when the shield contact switch in the top shield valve housing of the facility cask is actuated.

The pintle grapple contact light is energized when the proximity switch under the face of the facility grapple is within detection range of the top of a pintle.

The facility grapple open/closed lights are associated with the open/close switch for the grapple. When the switch is placed in the open or close position the grapple jaws will move if all interlocks have been satisfied. The open light will energize when all three jaws of the grapple are fully open. The close light will energize when all three jaws of the grapple are fully closed.

The two indicating lights for "Air Off Bottom/Top Valve" indicate when air is not applied to the facility cask locking pin air cylinders to open the locking pins for the bottom and top valves. When the light is on, air is not applied and the pins will close by spring pressure if the locking holes are lined up with the pin. When the light is off, air is supplied to the locking pins to retract them to the unlock position.

A "Lockpin Air Available" indicating light, when on, indicates sufficient air pressure is available to operate the facility cask bottom and top shield valve locking pin cylinders.

The top and bottom locking pin status lights indicate whether the locking pins are in the fully open or the fully closed position. This indication is obtained from limit switches that monitor the position of the locking pins.

When conditions are met to open the top or bottom valve, positioning the switch to the open position will supply air to the locking pin air cylinders. When the locking pin leaves the fully closed position its indicating light will go out. When the locking pin is fully retracted, its indicating light will energize, and the shield valve (top or bottom, depending on which valve is being operated) will begin to open. When the cask shield valve leaves the closed position its indicating light will go off. When it reaches the full open position its indicating light will come on. Similar action occurs in the close direction except that the air to the locking pins will be shut off when the valve reaches the full closed position.

There are eight indicating lights and eight push buttons, labeled A through H, associated with eight different positions that are programmed for the grapple hoist. When the interlocks are satisfied so that the hoist may be moved to a position selected by the push button, its associated light will energize, and the hoist moves at normal speed until it approaches the position selected. The hoist will then move at slow speed until it reaches the selected position and stop. If a new position is selected that is not the

next position, the hoist will move directly to that position but will slow down as it passes through pre-determined intermediate position(s).

The shuttle car (WH05) is controlled from the Cask Loading Room Control Panel. Shuttle car controls are described here for continuity. The shuttle car "Auto/Manual" switch selects the mode of control. In "Manual", the car can be moved forward (west) or reverse (east) by pressing the "Forward" or "Reverse" pushbuttons. Shuttle car speed in manual is controlled by adjusting the "Shuttle Car Speed" potentiometer. Automatic (Auto) mode allows the car to be moved directly to the desired predetermined positions by pressing associated pushbutton. As the car approaches the desired position, the shuttle car programmable limit switch is set to slow and then stop the car. The programmed stop positions are:

- Position W - road cask under cask unloading room port
- Position X - road cask under hot cell port/lid detensioning location
- Position Y2 - lid storage platform under cask loading room port
- Position Y1 - road cask under cask loading port

Four indicating lights indicate when the shuttle car is at each of the predetermined positions. Two red lights indicate when the shuttle car has reached the west or east end overtravel stop positions.

The "Canister Transfer System Mode Switch" has three positions: "ASSY, NEUT, XFER" for assembly, neutral, and transfer modes, respectively. The assembly mode allows shuttle car movement during cask lid handling operations; the transfer mode prevents shuttle car movement during canister transfer between the road cask or shielded insert and the facility cask. The neutral mode prevents all shuttle car motion.

A "CUR Valve Closed" indicating light indicates the cask unloading room floor shield valve is closed to allow movement of the shuttle car. Shuttle car motion is also prevented if the hot cell shield valve or the transfer cell shield valve is not closed.

An "Emergency Stop" pushbutton is provided to stop all motion of the shuttle car in an emergency.

The shield valve control pushbuttons are used to position the transfer cell shield valve under the cask loading port in either the open or closed position.

When the open, stop, or close pushbutton is momentarily pressed, the shield valve will move as selected if the interlocks have been satisfied. The associated shield valve open indicating light indicates the shield valve is fully open, and the closed indicating light indicates fully closed.

The telescoping port shield is positioned by momentarily pressing the up, stop, or down pushbutton. The telescoping port shield will move as selected if the interlocks have been satisfied. When the telescoping port shield is in the full up position the "up" indicating light will be energized; when fully down, the "down" indicating light will be energized.

The 6.25-ton grapple hoist operation mode switches control the hoist operation as follows:

- When the MAN/OFF/AUTO switch is placed in the Auto position the hoist is controlled automatically by the eight pushbutton switches described above, or by the swipe sequence programming.

- When the MAN/OFF/AUTO switch is placed in the manual position the hoist is controlled by the manual hoist switches. Two momentary pushbutton switches are used for jogging lift and jogging lower at the hoist slow speed. The remaining manual switch is used to lift, stop, or lower at slow speed.

- When the hoist is lifting, its "Hoist Lifting" indicating light is energized. When lowering the hoist, the "Hoist Lowering" indicating light is on.

- When in JOG mode, the “JOG” indicating light is on.

A closed-circuit TV system is provided on the console. This system has the capability of selecting remote cameras to be displayed on the monitor. Three color cameras have pan, tilt, and zoom controls, three color cameras are fixed, three color cameras are digital, and there are four additional fixed black and white cameras. The fixed color cameras have zoom capability and an attached laser pointer. The fixed color cameras are positioned to provide backup verification that the shuttle car is at each of the four operating positions. Two of the digital cameras are positioned at "position_X" to provide additional views (fixed) of the de-tensioning process and one digital camera (electronic pan, tilt, and zoom) is positioned at "position_Y" to provide an additional view of the swipe delivery system. The three pan/tilt/zoom cameras are provided for general viewing. The four fixed black and white cameras are arranged at 90 degree intervals around the transfer cell shield valve to provide canister identification when required.

3.6.4.6 I & C for the Facility Cask Rotating Device

The FCRD is controlled by the Programmable Logic Controller (PLC) in the cask loading room control panel. A low oil level switch, mounted in the hydraulic power unit (HPU) oil reservoir, protects the HPU pump from running without oil. The supply and return filters on the HPU have local mechanical indication of high differential pressure with built in remote

senders. If a filter becomes loaded such that it needs replacement, the local indicator will turn from green to red and a switch will close causing the PLC to light the "service filters" indicator on the FCRD electrical enclosure.

One proximity switch is mounted on the north tower to sense when the north lift arm is full up. Proximity switches on the north and south towers sense when the lift arms are full down. These signals are used to control the motion of the arms and to determine when the cask trunnion latches and facility cask transfer car lockpins should be extended or retracted.

The facility cask transfer car lockpin actuating hydraulic cylinders have limit switches built in to indicate full travel of the cylinders. Proximity switches are mounted on the saddle to sense the fully latched or unlatched condition of the north and south cask trunnion rotating latches.

A proximity switch is mounted on the floor under the east end of the FCRD that is positioned to sense the presence of the facility cask transfer car.

The upper section on the Cask Loading Room Control Panel also contains the controls for the detensioning robot (WH05), the swipe robot (WH05), and the swipe delivery system (WH05). The functions and operation of these two robots are described in WH05. The controls are described here for continuity.

Two 2-position switches control the operation of the detension robot. The "Enbl Deten" switch has two positions: "Enbl" for enable and "Dsbl" for disable. The disable position prevents detension robot from engaging the inner vessel lid bolt for de-tensioning. When the proper conditions have been met in the transfer cell, the enable position is selected, placing the programming for the detension robot in effect. The "Detension Mode" switch has an "Auto" position for automatic operation and a "Step" position for semi-automatic operation. In the automatic mode, the robot will locate, loosen (detension), and back out all eight road cask inner lid bolts in a predetermined crossover sequence. Step mode allows the operator to select which bolt will be operated on. An "Initiate/Continue" pushbutton is used by the operator to either initiate the unbolting sequence of all eight bolts in auto mode or initiate the detensioning of a single bolt in step mode. In step mode, a bolt will be de-tensioned if the “Enbl Deten” switch is set to “Enbl” when the robot is over the current bolt position and the initiate button is pressed. To skip de-tensioning, the switch is set to “Dsbl” prior to pressing the initiate button. There is a "Deten Ready" indicating light to indicate that interlock and programming requirements have been met to allow initiation of a detensioning sequence. The "Detension Complete" indicating light signals the completion of a detensioning sequence. An "Sequence Step Initiated" indicating light warns the operator that the robot has started a detensioning sequence and is in

motion. A "Step Complete" indicating light tells the operator the ordered bolt detensioning step has been completed.

Swipe robot operation is controlled by two switches. The "Swipe Mode" selector switch has six positions corresponding to the different preprogrammed swipe robot sequence options. Listed in the normal operating order, the options are:

Lid	Automatically raises the inner vessel lid to hoist position FF, allowing the robot to sample (swipe) the lid bottom
Top	The robot samples the top of the canister pintle
North	If not already at a minimum height (position GG), the hoist automatically raises the canister to hoist position GG, allowing the robot to sample the north side of the canister
West	Directs the robot to sample the west side of the canister
East	Directs the robot to sample the east side of the canister
Bot	Automatically raises the canister to hoist position EE, allowing the robot to sample the bottom of the canister

At all three side swipe positions (North, West, East), the samples are taken at a height determined by the operator. After the swipe location is selected, the operator initiates the swipe sequence by pressing the "Initiate Swipe" pushbutton. A "Swipe Initiated" indicating light warns the operator that the swipe sequence has started and the robot is in motion. The "Swipe Complete" indicating light indicates the robot has taken the sample and is delivering it to the swipe delivery system (WH05). The "Swipe Delivered" indicating light indicates the robot has placed the sample in the swipe delivery system carrier and is returning to its home position. A "Carrier Ready" indicating light is provided by the swipe delivery system indicating that a carrier with a clean swipe sample holder is in place for access by the robot. The radiation technician operating the swipe delivery system reports readiness to receive the next swipe by pressing a pushbutton in the service room, lighting the "Rad Tech Ready" indicating light.

Status and error messages for both robots appear on the digital data display. When a condition that causes a robot error or a swipe delivery system error has been cleared, the robot controllers can be reset and the error display cleared by pressing the "Robots Reset" pushbutton. Pressing the "Robots to Home" pushbutton will interrupt the sequence of either robot, causing the robot to return to its normal home or parked position. Pressing the "Robots to Home" pushbutton will also cause an

open swipe delivery system carrier to close and be returned to the service room receive station (deliver carrier) if the swipe robot is at home.

3.6.5 I&C for the Horizontal Emplacement and Retrieval Equipment (HERE)

3.6.5.1 I&C for the Alignment Fixture

The alignment fixture is equipped with three hydraulic jacks to level the fixture. Each of these jacks has a raise limit switch that indicates when the jack is at the retracted position.

There are two tilt sensors attached to the alignment fixture that are used for "leveling" operations. After the alignment fixture is aligned with borehole, the existing signal from the tilt sensors are defined as "zero." Any variation from the "zero" during subsequent operations may require corrective action.

There are three facility cask proximity sensors mounted on the face of the shield collar that are used to indicate that the facility cask is properly aligned with the Alignment Fixture Assembly.

3.6.5.2 I&C for the Waste Transfer Machine

There is a leveling jack on the underside of the unit that is used to level the leveling platform. This jack has raise limit switch to indicate when the jack is at its retracted position.

There is worm gear travel nut arrangement that moves the staging platform on the leveling platform. A limit switch mounted on the leveling platform is activated by cams mounted on the staging platform that stops the staging platform at its ends of travel.

There is a tilt sensor on the staging platform that is used to align the staging platform with the alignment fixture. Pins on the front of the leveling fixture align the assembly in the horizontal position. The tilt switch is used to complete the alignment in the vertical direction.

The transfer carriage has a hydraulic drive system, using a hydraulic ram that moves the transfer carriage on the staging platform. It has a proximity switch mounted on the face that stops the transfer carriage prior to coming into contact with the facility cask. The control console has indication when the transfer carriage is in position in respect to the facility cask.

There are two shield plug carriage detection switches that are activated when the shield plug carriage is seated on the staging platform rails between the fully retracted transfer carriage and the facility cask. Movement of the transfer mechanism, the facility cask valves, and the

transfer carriage all have interlocks dependent on the status of these switches.

There is an oil pressure transducer and an oil pressure switch associated with the hydraulic system of the transfer carriage. The transducer provides a signal to the control console to indicate to the operator the status of the hydraulic system pressure. The oil pressure switch provides an alarm if the hydraulic pressure becomes too high. An oil pressure gauge provides local indication of the hydraulic pump discharge pressure.

There are pintle contact proximity switches and grapple position limit switches associated with the transfer carriage. The two pintle contact switches are proximity switches that are activated when grapple face comes in contact with the pintle of either the waste container or the shield plug. The four grapple position limit switches, two for open and two for closed connected in parallel, are used to determine the full open or full closed condition of the grapple jaws.

There are two spring-loaded reel-type mechanisms attached to multi turn potentiometers to monitor the displacement of the transfer mechanism. As the transfer mechanism moves the potentiometers provide a 4-20 ma output related to distance. The output of one is displayed on the control console. The output of both are provided to the programmable controller for error detection.

There are three proximity switches that are activated when the transfer carriage is within 0.25 in. of the facility cask. These switches provide a time-delayed shut off for the transfer carriage hydraulic ram.

There is a liquid level sight glass on the hydraulic fluid reservoir that indicates that the reservoir is full.

A compressed air supply is attached to the leveling platform to supply air to open the facility cask shield valves. This system is equipped with a regulator and a pressure indicator to indicate the air pressure of the regulated air.

3.7 System Interfaces WH03

Listed below by subsystem is a summary of primary and secondary interface requirements for the WH03 subsystem.

3.7.1 Primary Interfaces

The RH waste handling system requires service from the Compressed Air System CA00, the Plant Building, Facilities and Miscellaneous Equipment System CF00, the Central Monitoring System CM00, the Underground Hoist System UH00, the Electrical System ED00, and the Underground

Facility and Equipment System AU00, Heating, Ventilation and Air Conditioning HV00 System, Radiation Monitoring RM00 System, and Underground Ventilation VU00.

3.7.1.1 CA00

Provide the compressed air to open the shield valve lockpins on the facility transfer cask.

Provide the compressed air to raise the cask loading room turntable to permit rotating the turntable.

3.7.1.2 CF00

Provide the space to support the RH equipment in the RH Bay of the WHB.

Provide space and shield doors for cask unloading room.

Provide the crane supports for the 140/25-ton crane in the RH Bay.

Provide the crane supports for the 6.25-ton hoist in the cask loading room.

Provide space, rails, and shield doors for the facility cask loading room and its RH equipment therein.

3.7.1.3 CM00

Provide remote alarm and display status of the ceiling shield valve in the transfer shuttle room.

3.7.1.4 UH00

Provide transportation for the waste and WH03 equipment between the surface and the underground.

3.7.1.5 ED00

Provide lighting in the cask loading room, cask unloading room, and in the underground disposal areas.

Provide power for the 140/25-ton crane in the RH Bay.

Provide power for the road cask transfer car drive system.

Provide power for the Cask Preparation Station platform drive system and jib crane.

Provide power for the facility cask transfer car drive system.

Provide power for the 6.25-ton hoist in the cask loading room.

Provide power for the screw jacks that position the telescoping shield in the cask loading room.

Provide power to operate the ball nut that positions the ceiling shield valve in the transfer shuttle room.

Provide power to operate the screwjack, ballnuts, and control systems for the underground emplacement system.

Provide power to the HPU for the FCRD in the cask loading room.

3.7.1.6 AU00

Provide space to store the RH waste underground.

3.7.1.7 HV00

Provides filtration of exhaust air from all waste handling areas in the surface facility, to ensure that any contaminants released are properly contained and disposed of.

3.7.1.8 RM00

Provide ARM signal to prevent opening the RH area cask unloading room shield door on a Hi radiation level.

3.7.1.9 VU00

Provide ventilation for the use of underground waste handling diesel equipment.

3.7.2 Secondary Interfaces

System WH00 provides services to the following system:

3.7.2.1 Packaging and Transportation System (PT00)

Subsystem WH03 provides the cranes and other equipment to support loading, unloading and leak tests of the RH road casks.

4.0 OPERATION

Waste handling site operation involves the receipt, handling, and emplacement of RH TRU waste canisters at the WIPP site. The equipment and facilities of subsystems WH03 and WH05 are utilized to

support this RH TRU activity. The site operation requires the integration of equipment from various subsystems. Therefore, the sequence of operations that must be performed for the receipt, handling, and emplacement of RH TRU waste at the WIPP site are presented accordingly in WIPP site controlled procedures.

5.0 SYSTEM LIMITATIONS, SET POINTS, AND PRECAUTIONS

This section describes the operating limits, SET POINTS, alarms, interlocks, and precautions as related to operation of the waste handling system. Consideration is given to general personnel safety, equipment safety and performance, and overall system performance. The information reiterates the limits, SET POINTS, and precautions imposed either implicitly or explicitly by the system operations described in Sections 4, 6 and 7.

5.1 Radiation Limits

RH TRU waste canisters delivered to the WIPP site shall have a maximum external surface dose rate of 1000 rem/hr.

5.2 Operating Limits

The WHB RH Bay must be more positive pressure with respect to the Contact-Handled Bay when handling RH TRU waste casks and canisters in the WHB. If the required WHB RH Bay pressure differential established by system HV00 is not provided or lost, all surface waste handling operations in the RH Bay must be suspended pending re-establishment of the proper WHB RH Bay differential pressure.

The area radiation monitors (ARMs) and continuous air monitors (CAMs) in the RH Bay and the cask unloading room provided by system RM00 must be operational when handling RH TRU casks and canisters in the WHB. Any ARMs or CAMs alarm requires waste handling operations in the affected area to be suspended until the condition causing the alarm is resolved.

The underground Controlled Area (CA) where the waste is to be emplaced is operated with ventilation control requirements as indicated in VU00.

Area Radiation Monitors (ARMs) and CAMs in the underground emplacement area must be operational when RH TRU waste is in the underground. Any ARM or CAM alarm requires waste handling operations in the affected area to be suspended until the condition causing the alarm is resolved.

5.3 Set Points and Alarms

ALARM	SET POINT
FCRD Motion Beacon and Horn	Sounds 5 seconds before FCRD motion starts and continues until the control joystick is released.
Low Oil Level Light	Lights when oil in the HPU reservoir falls below the normal operating range.
Service Filters	Lights when either high-pressure filter differential pressure visual condition indicator indicates a filter should be replaced. Factory preset.
Lid Break Free/Canister Weight	Hoist Load Heavy light flashes when the "Lid" position is selected on the Swipe Mode selector switch and the hoist load exceeds 2,600 lb.
Hoist Load Heavy	Sounds an alarm buzzer and Hoist Load Heavy light flashes when any position other than "Lid" is selected on the Swipe Mode selector switch and the hoist load exceeds 9,600 lb.

5.4 Interlocks

5.4.1 Canister Transfer System Interlocks

Control Interlocks for RH TRU Waste Handling Equipment Operational control interlocks are provided to minimize the potential for accidents.

FUNCTION	INTERLOCK
To move the facility cask transfer car in reverse (east) in the cask loading room	1) 6.25-ton grapple hoist must be in position A (may be overridden by the interlock override keyswitch) 2) Telescoping port shield must be fully down (may be overridden by the interlock override keyswitch). 3) Both the north **and** south FCRD lockpins must be fully retracted. 4) Both the north **and** south FCRD rotating latches must be fully open. 5) Both the north **and** south FCRD lift arms must be fully down. 6) Car present proximity switch must not be activated (senses presence of the facility cask transfer car frame).
To run the FCRD HPU pump	1) Joystick must be raise **or** lower 2) Oil level must be above lower limit 3) 6.25-ton grapple hoist must be in position A (may be overridden by the interlock override keyswitch). 4) Telescoping port shield must be fully down (may be overridden by the interlock override keyswitch) 5) Facility cask transfer car must be present (may be overridden by the interlock override keyswitch).
To close the FCRD rotating trunnion latches	1) Joystick must be in raise **or** joystick must be in lower and neither full down proximity switch activated 2) HPU pump must be running 3) Both the north **and** south latches must not be closed
To extend the FCRD lockpins	1) Joystick must be in raise **or** joystick must be in lower and neither full down proximity switch activated 2) HPU pump must be running 3) Both the north **and** south lockpins must not be extended.
To rotate the FCRD up	1) Joystick must be in raise 2) HPU pump must be running 3) Both the north **and** south latches must be

	closed 4) Both the north **and** south lockpins must be extended 5) The north lift arm is not full up
To rotate the FCRD down	1) Joystick must be lower 2) HPU pump must be running 3) Both the north and south latches must be closed (will close if not already closed) 4) Both the north **and** south lockpins must be extended (will extend if not already extended) 5) The north lift arm is not full down, and the south lift arm is not full down
To open the FCRD rotating trunnion latches	1) Joystick must be in lower 2) HPU pump must be running 3) Both the north **and** south latches must not be open 4) Both the north **and** south lift arms must be full down
To retract the FCRD lockpins	1) Joystick must be in lower 2) HPU pump must be running 3) Both the north **and** south lockpins must be retracted 4) Both the north **and** south lift arms must be full down
To open the top valve of the facility cask	1) The top valve motor torque switch must be energized and not be tripped 2) Lockpins must be fully retracted 3) Shield bell must be in contact with the cask 4) The grapple hoist must be at position B
To close the top valve of the facility cask	1) The top valve motor torque switch must be energized and not be tripped 2) The grapple hoist must be a position A or B **and** the grapple is fully open (during normal operation, position A not used)

To open the bottom valve of the facility cask	1) The transfer cell shield valve must be fully open **and** the grapple hoist is at position D **and** the grapple is fully open **and** there is o grapple/pintle contact **OR** 2) The grapple is fully closed **and** the hoist load is greater than 1,800 lb **and** less than 9.600 lb **and** the hoist is at position C **and** the shuttle car is at position Y1 and the telescoping port shield is in contact with the facility cask
To close the bottom valve of the facility cask	1) The bottom valve motor torque switch must be energized and not be tripped 2) The grapple hoist must be at position B or C **OR** 3) The grapple hoist must be in position D **and** the grapple is fully open **and** there is no grapple/pintle contact
To open the transfer cell shield valve (WH05	1) The CTS Mode switch is in transfer **and** the shuttle car is at position Y1 **and** the grapple hoist is at position C or D 2) Telescoping port shield must be in contact with the facility cask AND the facility cask bottom shield valve must be fully closed 3) Telescoping port shield must be in the full up position as indicated by its fully up limit switch 4) Safety lockout pushbuttons associated with the shuttle car in the transfer cell must be pulled 5) Both the cask unloading room floor shield valve and the hot cell shield valve must be fully closed. 6) The swipe robot is at the home position.
For Lid Storage ONLY	1) The CTS Mode switch is in assembly **and** the grapple hoist is at position E or F **OR** 2) The CTS Mode switch is in assembly **and** the grapple hoist load is less than 2,600 lb

To close the transfer cell shield valve (WH05)	1) 6.25-ton grapple hoist must be in position B, C, or D **OR** 6.25-ton grapple hoist must be at Position E or F **and** the grapple hoist load is less than 2,600 lb 2) The CTS mode switch is in assembly 3) Facility cask bottom shield valve lockpins must be fully in

To initiate a swipe sequence with the swipe robot	1) The carrier ready and swipe system ready signals must be present (an open carrier with a swipe holder in the proper location and the carrier handler open and idle) 2) The grapple hoist must **not** be at position A, B, C, or D 3) The transfer cell ceiling shielding valve must be opened 4) The CTS mode switch must be in transfer mode 5) If "Lid" is selected, the grapple hoist must be at or lower than position FF and the grapple hoist must be ready to life (the lid will be raided automatically to position FF if not already there) **OR** The grapple hoist is already at position FF 6) If "Top" or "Lid" is selected, the grapple hoist load must be less than 2,600 lb 7) If "East, West, North" is selected, the grapple hoist must be lower than position EE. If the hoist is below position GG, the hoist will automatically raid to position GG prior to commencing the side swipe 8) If "Bot" is selected, the grapple hoist must be lower than or at position EE (if lower, the canister will be raised automatically to position EE) **OR** The grapple hoist is already at position EE 9) The transfer cell light curtain must be untripped 10) The shuttle car must be at position Y1 11) The swipe robot is ready
To initiate a swipe cattier delivery to the service room receiving station	1) The swipe robot must be at home 2) The swipe holder must have been delivered to the carrier by the swipe robot **OR** The "Robots Home" pushbutton is pressed 3) The swipe delivery system is rest (or power is restored to it)

To initiate a road cask inner lid detensioning sequence	1) The shuttle car must be at position X 2) The hot cell shield valve must be closed 3) The CTS Mode switch must be in “Neut” (neutral) 4) The Detension Mode selector switch must be in “Auto” or “Step” 5) If in “Auto” mode, the Enbl Deten selector switch must be in “Enbl” 6) Pintle contact must be made by proximity to the pintle contact proximity switch
To initiate a Road Cask inner lid tensioning sequence	1) The shuttle car must be at position X 2) The hot cell shield valve must be closed 3) The CTS Mode switch must be in “Neut” (neutral) 4) The Detension Mode selector switch is in “AUTO” 5) The Enbl Deten selector switch is in “DISABLE” 6) The transfer cell light curtain must be untripped

5.4.2 HERE Control System Interlocks

There is an administratively controlled key operated override (ACO) switch that can override most interlocks. In the interlock description below, whenever "(Not ACO)" is listed after the interlock, it means the interlock cannot be overridden by the ACO switch:

FUNCTION	**INTERLOCK**
To raise the hydraulic leveling jack (alignment fixture and leveling platform)	1) Mode selector switch (MODE SELECT SW1) must be in the ASSY/DISASSY position 2) Transfer mechanism must not be extended 3) Jack must not be in the full raise position (Not ACO) 4) Hydraulic pump for AFA or TC must be **ON**

To lower the hydraulic leveling jacks (Alignment fixture and leveling platform)	1) Mode selector switch (MODE SELECT SW1) must be in the ASSY/DISASSY position. 2) Transfer mechanism must not be extended 3) Jack must not be in the full lower position (Not ACO) 4) Hydraulic pump for AGA or TC must be **ON**
To extend the staging platform	1) Mode selector switch (MODE SELECT SW1) must be in the ASSY/DISASSY position 2) Waste transfer machine must be properly aligned with the alignment fixture 3) Extend limit switch must not be activated (Not ACO) 4) Proximity switches on the alignment fixture must not detect the facility cask
To retract the staging platform	1) Mode selector switch (MODE SELECT SW1) must be in the ASSY/DISASSY position 2) Retract limit switch must not be activated (Not ACO) 3) Facility cask front shield valve must be closed 4) Facility cask front shield valve lockpins must be extended 5) AFA locking clamps must be OPEN

To extend the transfer carriage	1) Mode selector switch (MODE SELECT SW1) must be in the ASSY/DISSAY position 2) Mode selector switch (MODE SELECT SW2) must be in the EMPLACE or RETRIEVE position 3) Waste transfer machine must be properly aligned with the alignment fixture (tilt) 4) Control switch must be returned to the OFF position after a power interruption (Not ACO) 5) “Extend” travel limit switches must not be activated (Not ACO) 6) Proximity switches on the transfer carriage must not detect the facility cask 7) Detection switches on the staging platform must not detect the shield plug carriage 8) Hydraulic pump for AFA or TC must be ON
To retract the transfer carriage	1) Mode selector switch (MODE SELECT SW1) must be in the ASSY/DISASSY position 2) Mode selector switch (MODE SELECT SW2) must be in the EMPLACE or RETRIEVE position 3) Waste transfer machine must be properly aligned with the alignment fixture (tilt) 4) Control switch must be returned to the OFF position after a power interruption (Not ACO) 5) “Retract” travel limit switches must not be activated (Not ACO) 6) Facility cask front shield valve or the rear shield valve must not be open 7) Hydraulic pump for AFA or TC must be ON 8) Locking pins for TC must be OPEN

To open the grapple	1) Transfer mechanism must not be extended beyond 15 in. 2) Control switch must be returned to the OFF position after a power interruption (Not ACO) 3) Fully open limit switches associated with the grapple must not be activated (Not ACO)
To close the grapple	1) Pintle detection switch on the grapple must be activated 2) Control switch must be returned to the OFF position after a power interruption (Not ACO) 3) Mode selector switch (MODE SELECT SW2) must be in the RETRIEVE position 4) Fully closed limit switches associated with the grapple must not be activated (Not ACO)

To open the facility cask front shield valve (closest to borehole)	1) Mode selector switch (MODE SELECT SW1) must be in the OPERATE position and 2) Mode selector switch (MODE SELECTOR SW2) must be in the EMPLACE or RETRIEVE position 3) Waste transfer machine must be properly aligned with the alignment fixture (tilt) 4) Front shield valve motor torque limit must not be tripped (Not ACO) 5) Proximity switches on the alignment fixture must detect the facility cask 6) Control switch must be returned to the OFF position after a power interruption (Not ACO) 7) Lockpins must be retracted (Not ACO) 8) If the shield plug carriage is on the staging platform, the transfer mechanism must be extended to between 140 and 141 in. 9) Valve open limit switch must not be activated (Not ACO) 10) Proximity sensors on the transfer carriage must detect the facility cask **OR** 11) Detection switches on the staging platform must detect the shield plug carriage
To close the facility cask front shield valve (closest to borehole)	1) Mode selector switch (MODE SELECT SW1) must be in the OPERATE position 2) Mode selector switch (MODE SELECT SW2) must be in the EMPLACE or RETRIEVE position 3) Waste transfer machine must be properly aligned with the alignment fixture (tilt) 4) Front shield valve motor torque limit must not be tripped (Not ACO) 5) Proximity switches on the alignment fixture must detect the facility cask 6) Control switch must be returned to the OFF position after a power interruption (Not ACO) 7) Transfer mechanism, the waste canister, or the shield plug cannot be

	inside the valve opening 8) Valve closed limit switch must not be activated (Not ACO) 9) Lock pins must be retracted (Not ACO)
To open the facility cask rear shield valve (farthest from borehole)	1) Mode selector switch (MODE SELECT SW1) must be in the OPERATE position 2) Mode selector switch (MODE SELECT SW2) must be in the EMPLACE or RETRIEVE position 3) Waste transfer machine must be properly aligned with the alignment fixture (tilt) 4) Rear shield valve motor torque limit must not be tripped (Not ACO) 5) Proximity switches on the transfer carriage must detect the facility cask **OR** The detection switches on the staging platform must detect the shield plug carriage 6) Transfer mechanism must be fully retracted 7) Proximity switches on the alignment fixture must detect the facility cask 8) Control switch must be returned to the OFF position after a power interruption (not ACO) 9) Lockpins must be retracted (Not ACO) 10) Valve open limit switch must not be activated (Not ACO)

To close the facility cask rear shield valve (farthest from borehole)	1) Mode selector switch (MODE SELECT SW1) must be in the OPERATE position and 2) Mode selector switch (MODE SELECT SW2) must be in the EMPLACE or RETRIEVE position 3) Waste transfer machine must be properly aligned with the alignment fixture (tilt) 4) Rear shield valve motor torque limit must not be tripped (Not ACO) 5) Proximity switches on the transfer carriage must detect the facility cask **OR** The detection switches on the staging platform must detect the shield plug carriage 6) Transfer mechanism must be fully retracted (Not ACO) 7) Proximity switches on the alignment fixture must detect the facility cask 8) Control switch must be returned to the OFF position after a power interruption (Not ACO) 9) Lock pins must be retracted (Not ACO) 10) Pintle detection switch on the grapple must not be activated (Not ACO) 11) Shield valve closed travel limit switch must not be activated (Not ACO)

To extend the transfer mechanism	1) Mode selector switch (MODE SELECT SW1) must be in the OPERATE position 2) Waste transfer machine must be properly aligned with the alignment fixture (Tilt) 3) Hydraulic system pressure must not be above 2,000 psig 4) Proximity switches on the alignment fixture must detect the facility cask 5) Facility cask rear shield valve must be open 6) Pump control switch must be returned to the ON position (Not ACO) 7) Transfer mechanism has not been extended more than 288 in. 8) Transfer mechanism must not be extended more than 261 ± 1 in. with the grapple open and the pintle detection switch activated by the pintle 9) Transfer mechanism must not be extended more than 139 ± 2 in. with the shield plug carriage in position and the facility cask front shield valve closed **OR** 24 ± 1 in. without the shield plug carriage and the facility cask front shield valve closed. 10) Pintle detection switch on the grapple must not be activated by a pintle with the facility cask front shield valve closed 11) If mode selector switch (MODE SELECT SW2) is in EMPLACE position, the pintle detection switch must activate on the grapple within 24 in. of travel 12) If mode selector switch (MODE SELECT SW2) is in the RETRIEVE position, the facility cask front shield valve must be open before the transfer mechanism reaches an extension point less than 140 ± 2 in.
To retract the transfer mechanism	1) Mode selector switch (MODE SELECT SW1) must be in the OPERATE position

	2) Waste transfer machine must be properly aligned with the alignment fixture (tilt) 3) Hydraulic system pressure must not e above 2,000 psig 4) Proximity switches on the alignment fixture must detect the facility cask 5) Facility cask rear shield valve must be open 6) Pump control switch must be ON position (Not ACO) 7) If mode selector switch (MODE SELECT SW2) is in the EMPLACE position, the facility cask front shield valve must be closed once an extension point of 140 ± 2 in. is achieved 8) If mode selector switch (MODE SELECT SW2) is in the RETRIEVE position and the grapple is closed, the facility cask front shield valve must be closed after the mechanism retracts to a point of 140 ± 2 in. 9) Transfer mechanism must not have reached a position of 14 in. with the grapple closed

5.4.3 HERE Tilt Mismatch/Change Interlocks

The three tilt sensors of the alignment fixture monitor the tilt angle of the HERE during operation. If the tilt angle goes into a hi hi alarm during the HERE operations, all HERE operations are automatically stopped and locked out by the TILT MISMATCH/CHANGE interlock until the equipment is realigned. ACO is required to operate a leveling jack under these conditions.

5.5 Precautions

Handling of RH TRU waste canisters with surface dose rates greater than 100 rem/hr requires extra radiation protection precautions. Safe operation under these conditions can be achieved through maintaining additional distance from the casks and/or temporary shielding. The necessary radiation protection steps shall be based on the measured surface dose rate of the road cask obtained during receipt inspection. The cask unloading room shield door is remotely operated and should only be opened or closed with direct visual access to the shield door travel area.

6.0 OFF-NORMAL EVENTS AND RECOVERY

Refer to Section 6.0 of Chapter G for the off-normal events and recovery scenarios which are applicable to RH TRU waste handling operations.

7.0 MAINTENANCE

Refer to Section 7.0 of Chapter G for the maintenance requirements and approach related to waste handling subsystems.

WIPP operations controlled corrective maintenance, preventative maintenance, and in-service inspection programs apply to the following Subsystem WH03 RH TRU Waste Handling equipment.

- 140/25-Ton Crane
- Canister Transfer System Main Control Panel
- Cask Lifting Yoke
- 72B Cask Outer Lid Lift Fixture and Storage
- Stand, 72B Cask Inner Lid Lift Fixture and Storage Stand,
- Impact Limiter Stand
- Road Cask Transfer Cars
- 6.25-Ton Grapple Hoist
- Facility Cask
- Facility Cask Rotating Device
- Facility Cask Transfer Car
- Telescoping Port Shield
- Shield Bell and Block
- Facility Cask Turntable
- Facility Grapple
- Horizontal Emplacement and Retrieval Equipment (HERE)
- Cask Preparation Station deck drive system
- Cask Preparation Area Jib Crane
- 72B Road Cask Lifting Yoke
- Cask Loading Room Control Console

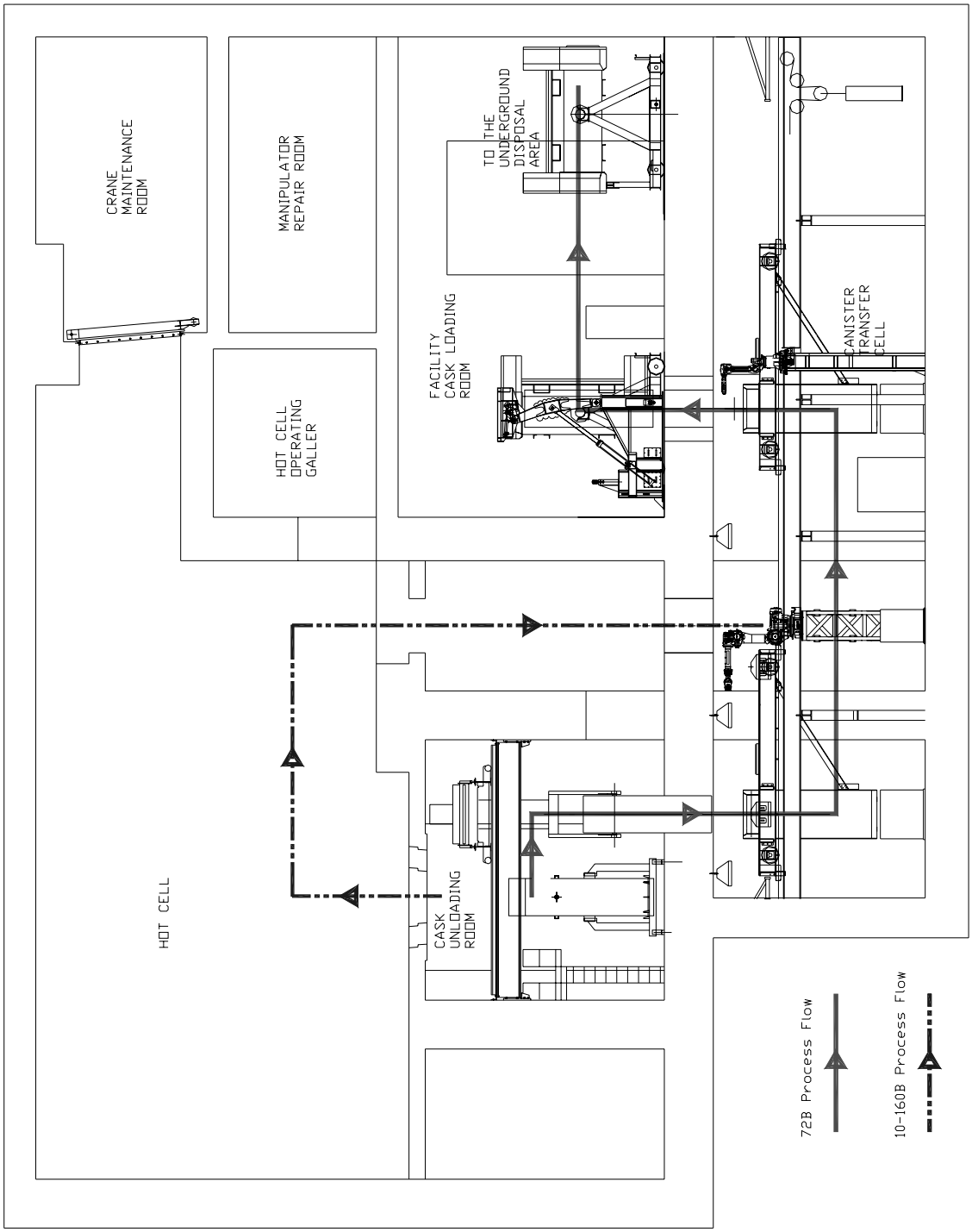

Figure WH II-I-1A - Hot Cell Complex Layout

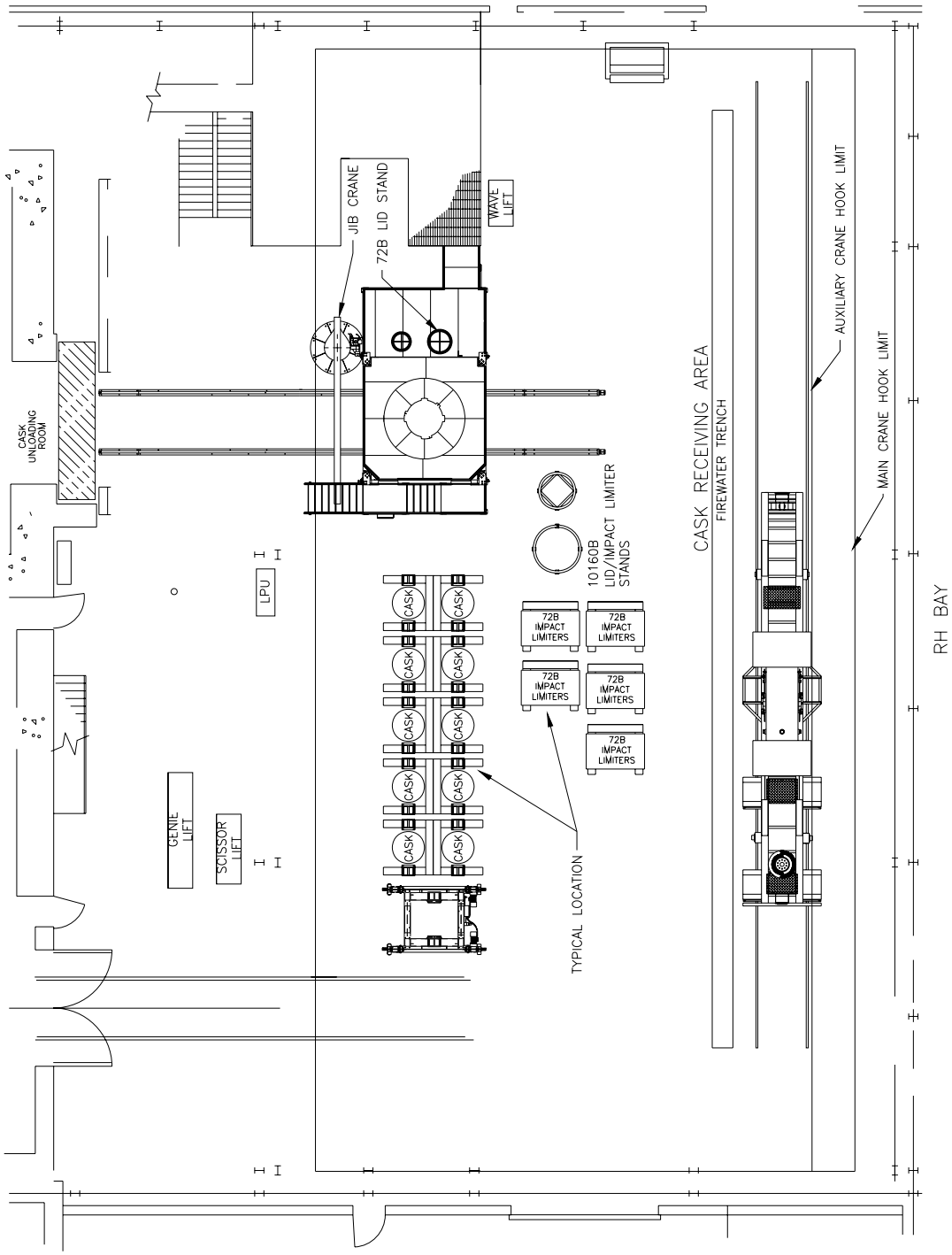

Figure WH II-I-1B - RH Bay Equipment Layout

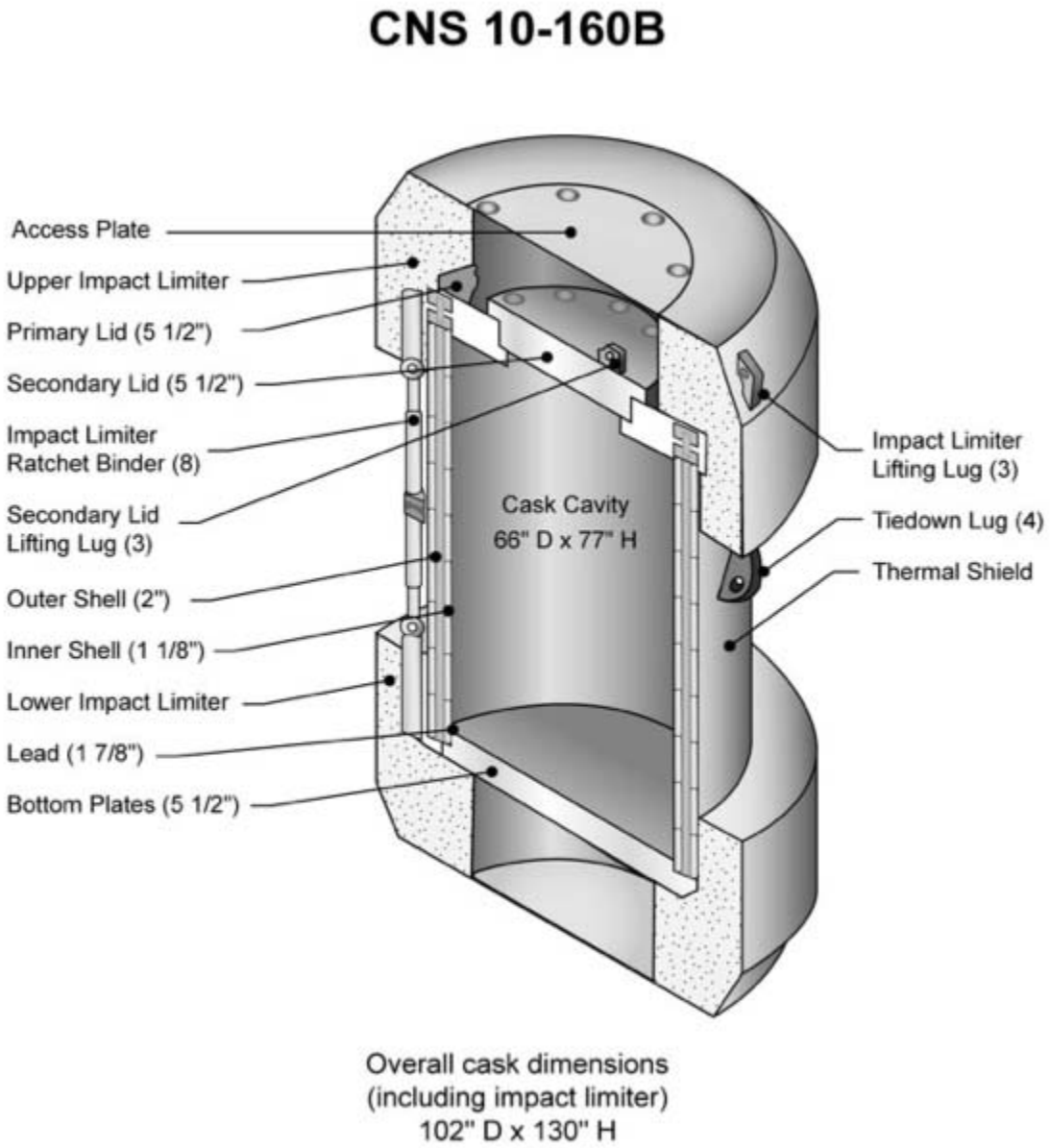

Figure WH II-I-2 – 10-160B Road Cask

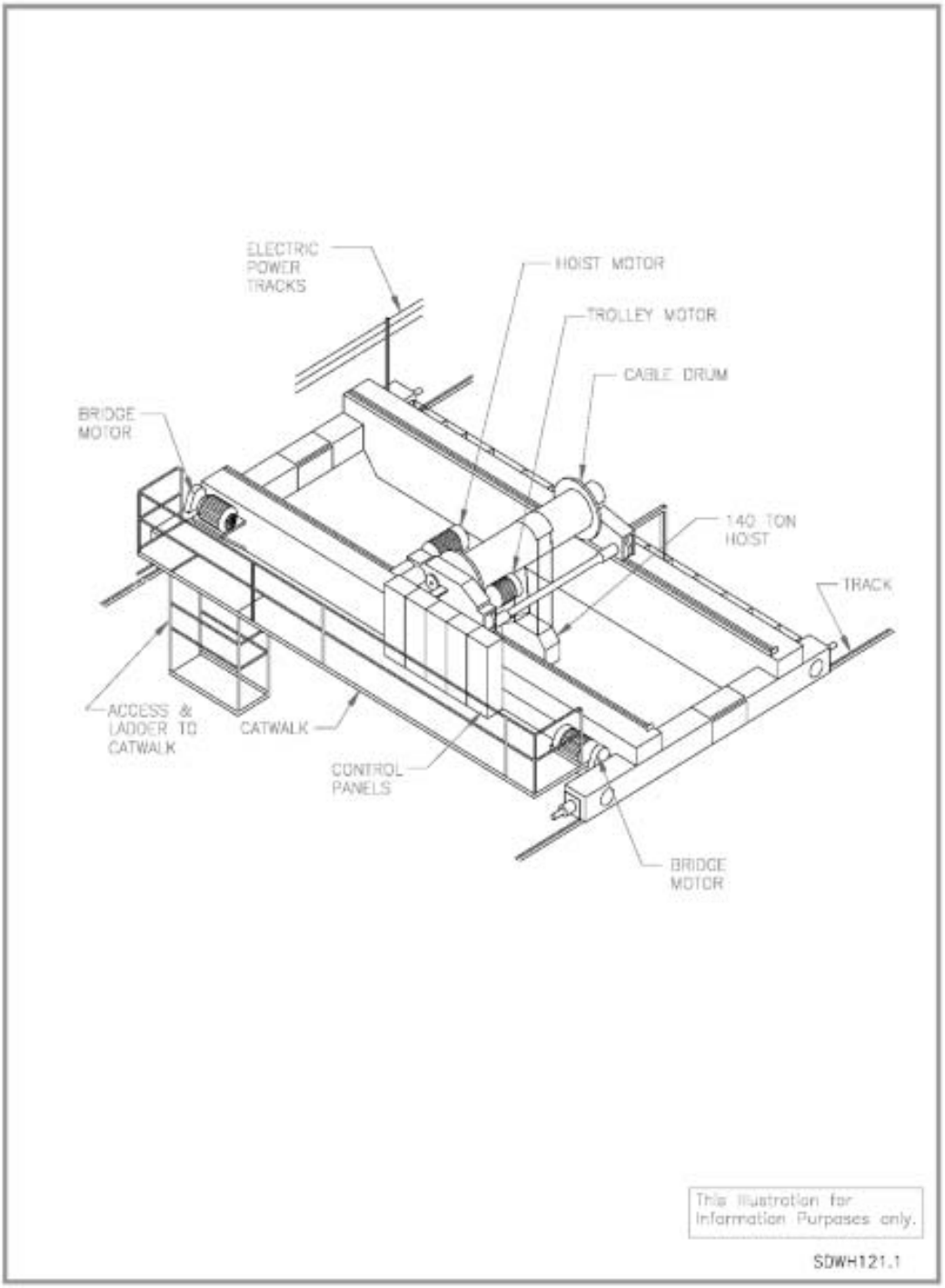

Figure WH II-I-3 – 140/25-Ton Bridge Crane

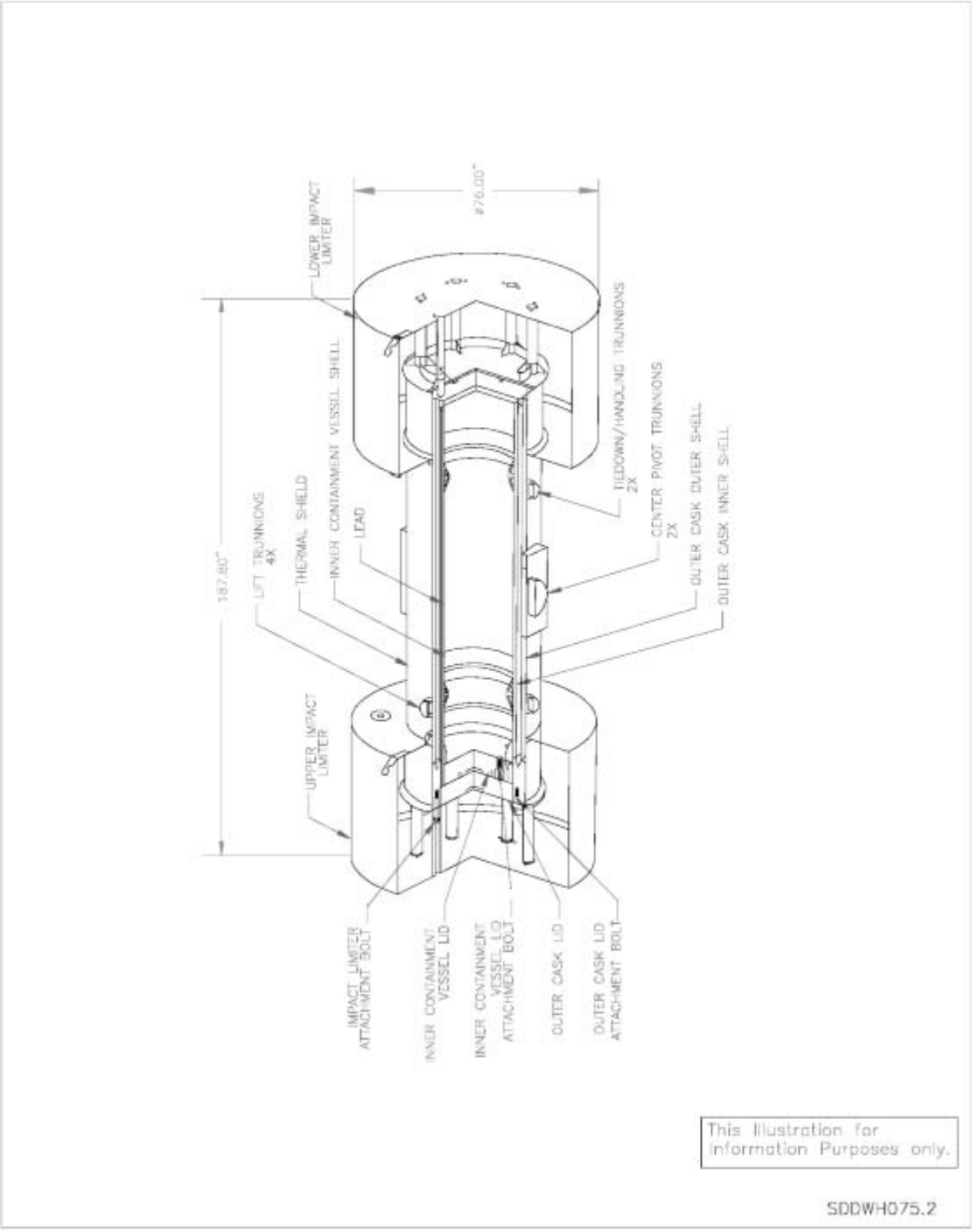

Figure WH II-I-4 – Shielded Road Cask

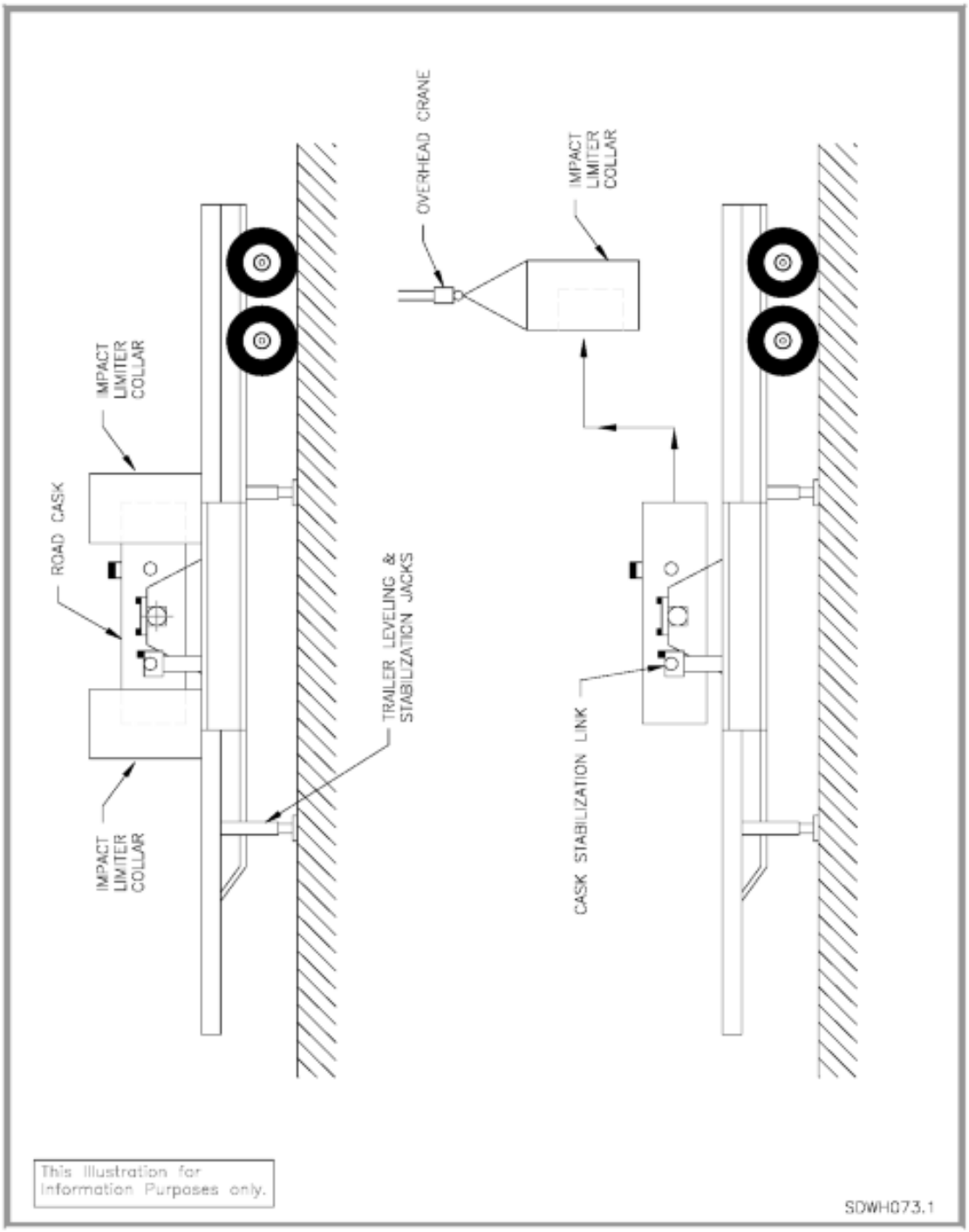

Figure WH II-I-5 – Removal of Impact Limiter Collar

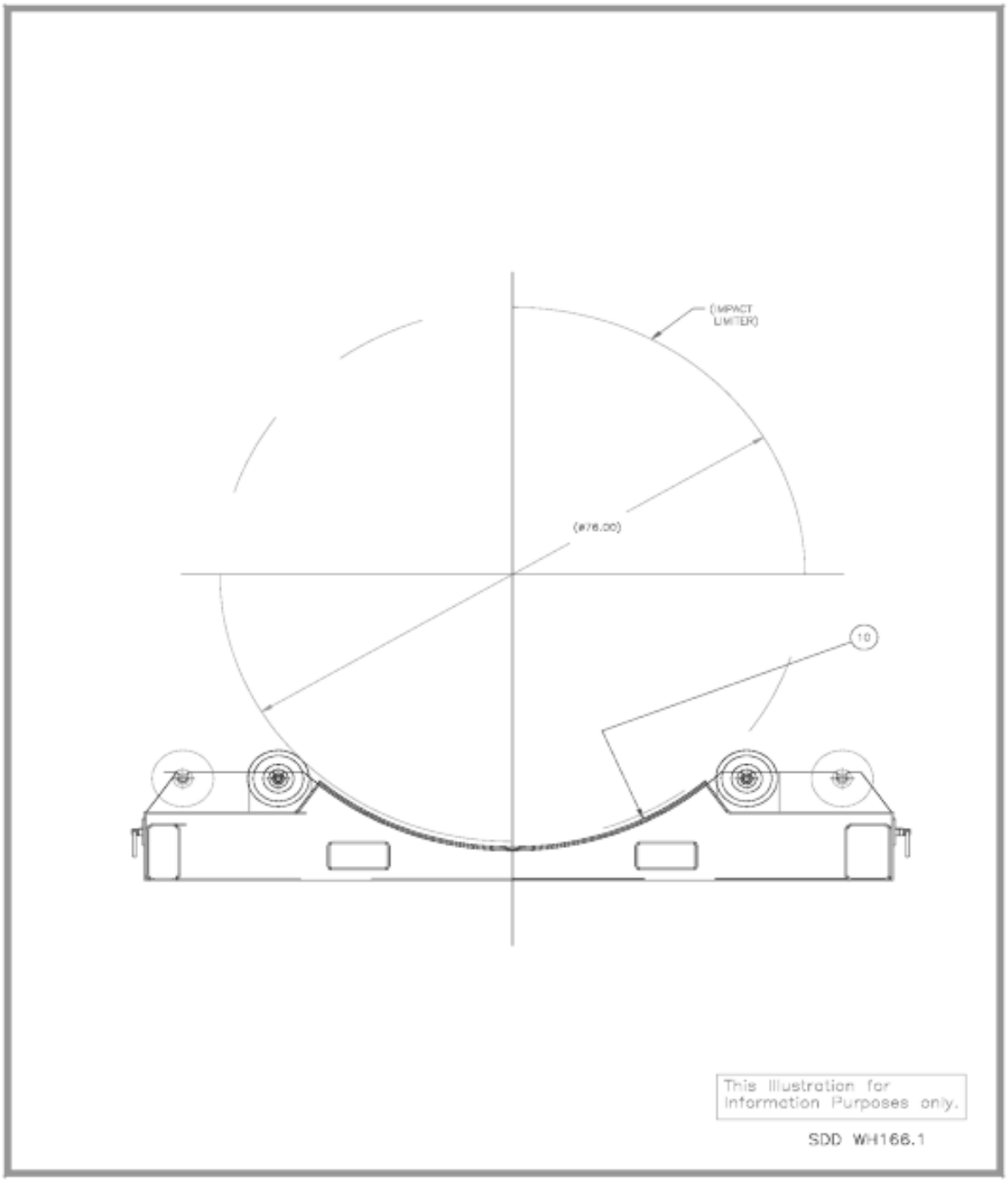

Figure WH II-I-6 – Impact Limiter Support Stands

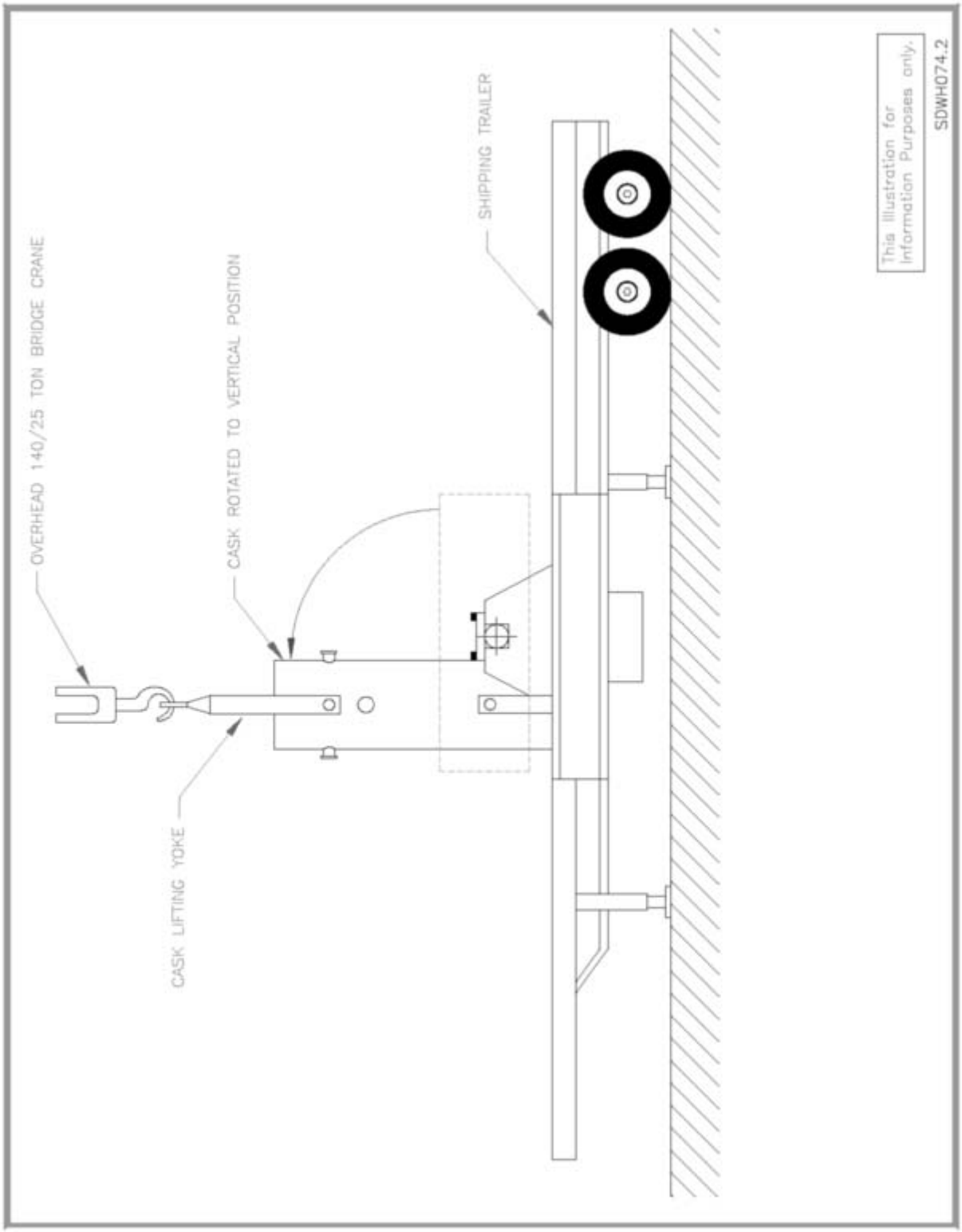

Figure WH II-I-7 – Rotating Shielded Road Cask

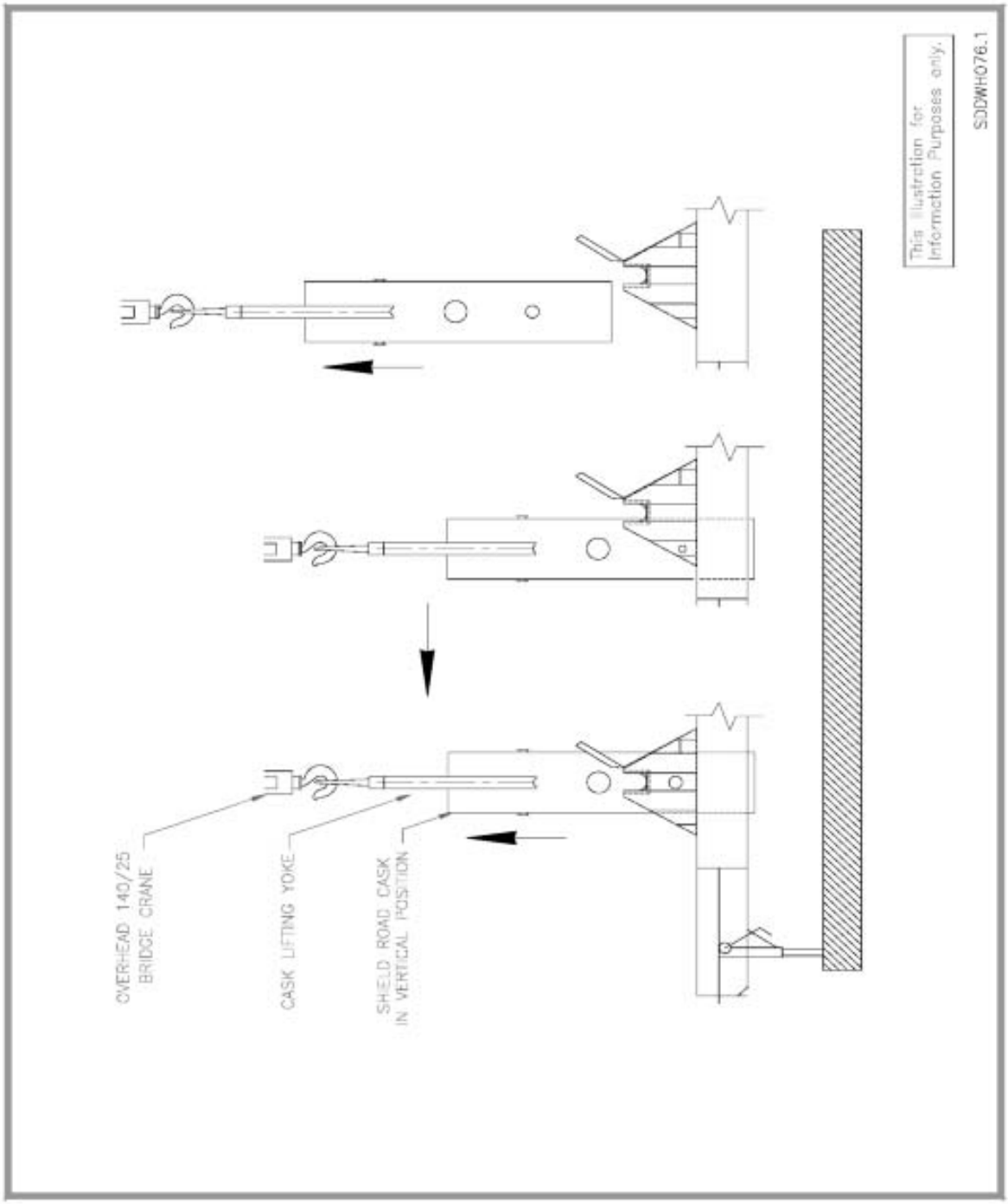

Figure WH II-I-8 - Lifting Shielded Road Cask

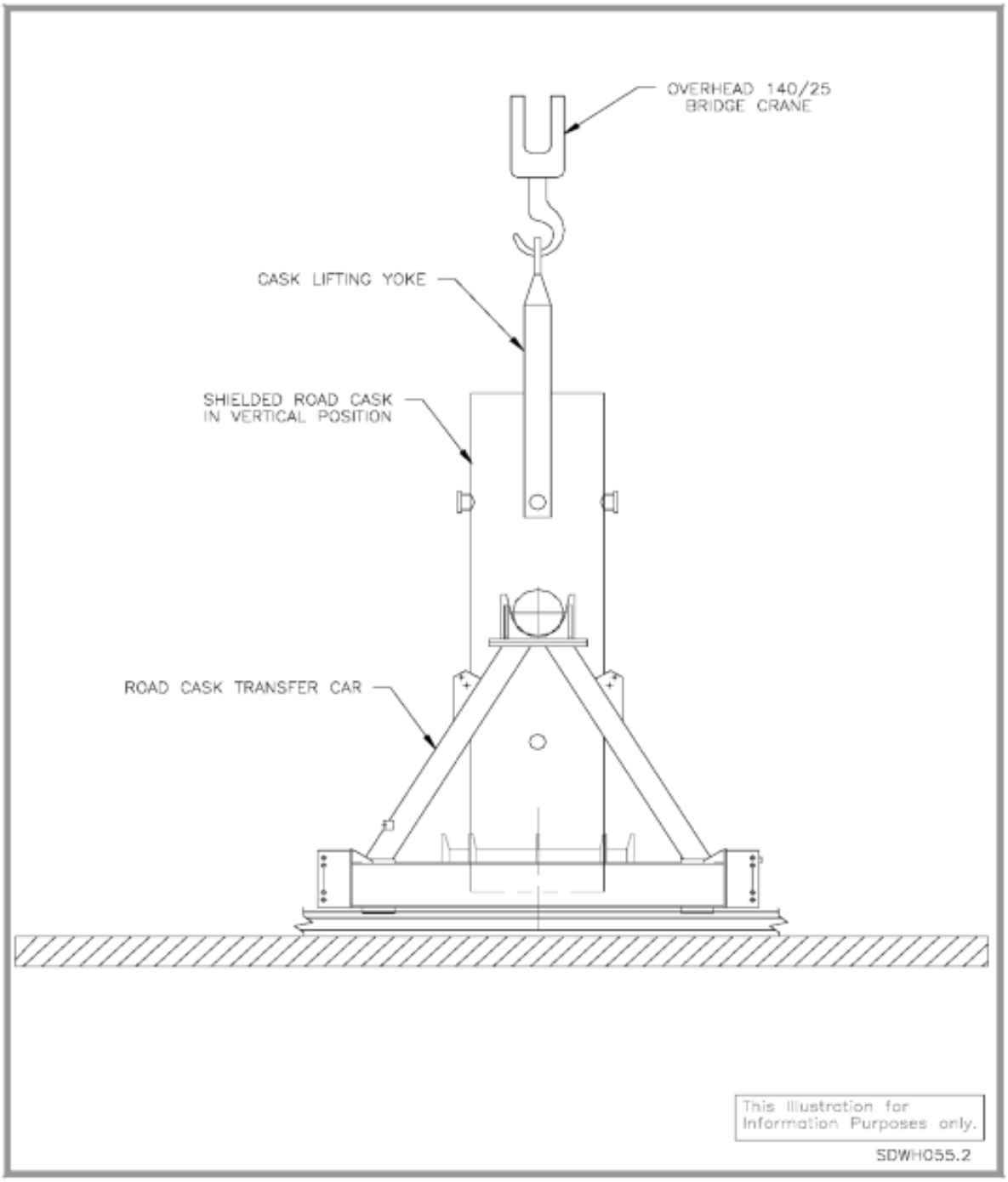

Figure WH II-I-9 – Lowering Road Cask Onto Transfer Car

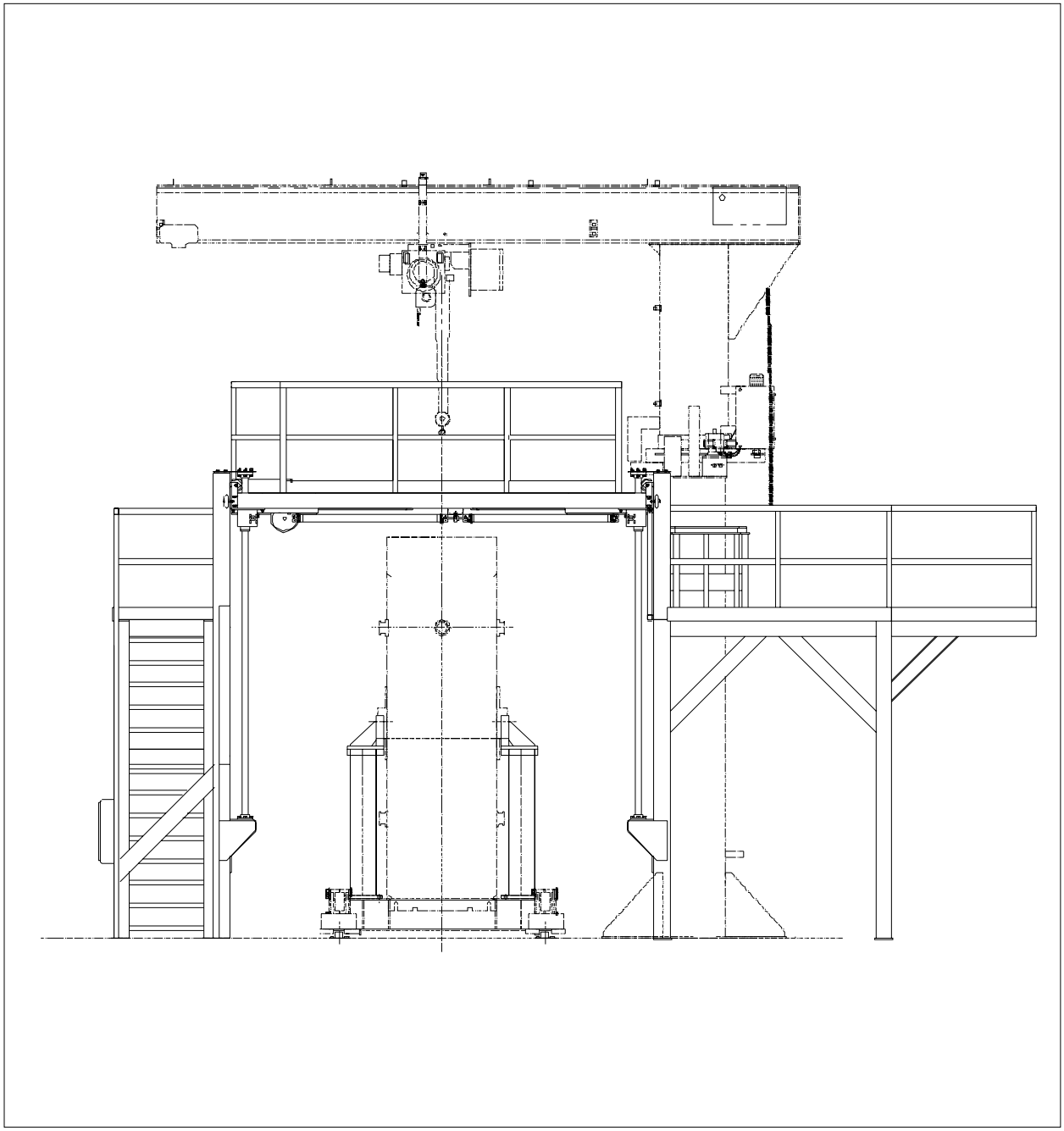

Figure WH II-I-10 – Cask Preparation Station Assembly

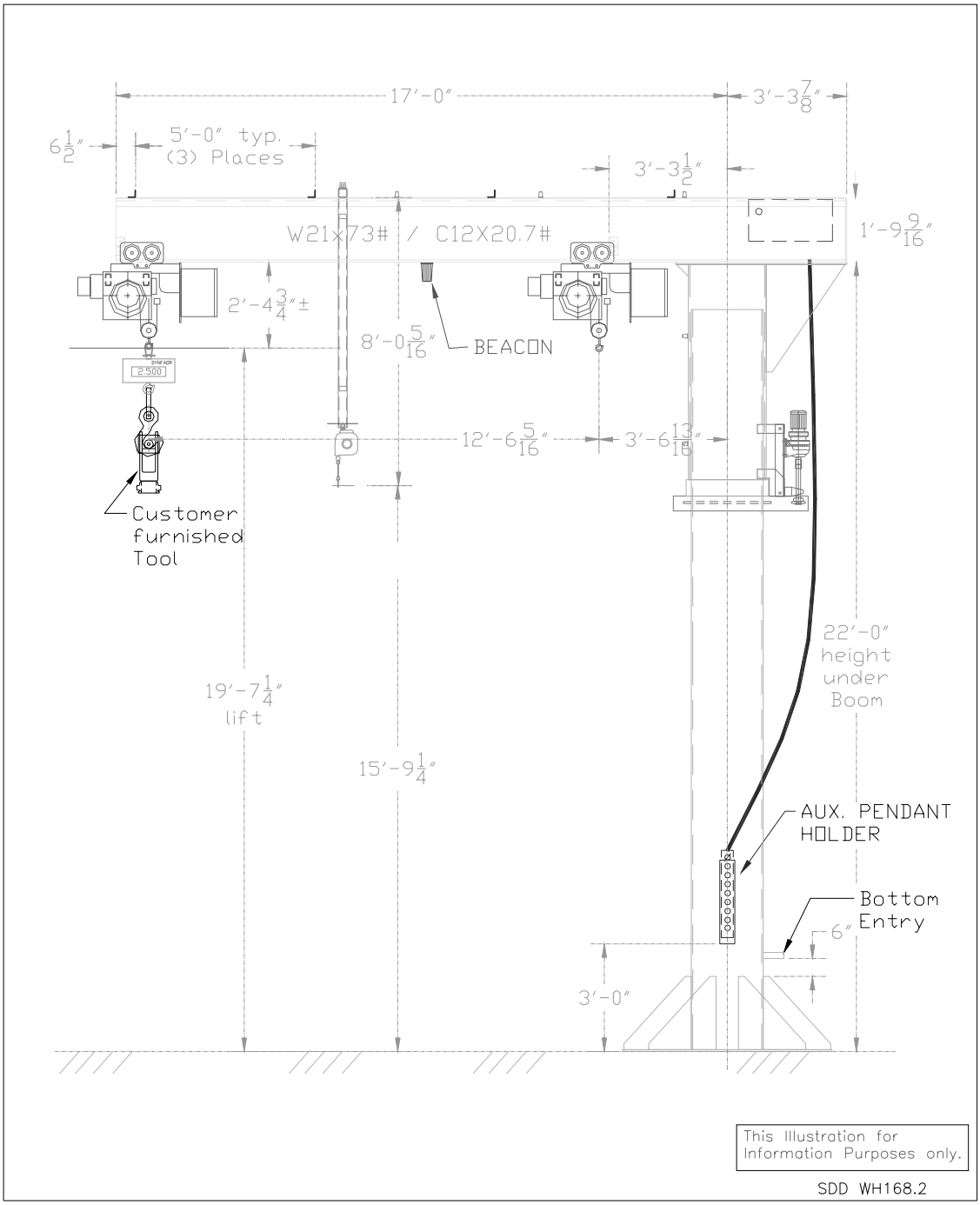

Figure WH II-I-11 – Cask Preparation Station Jib Crane

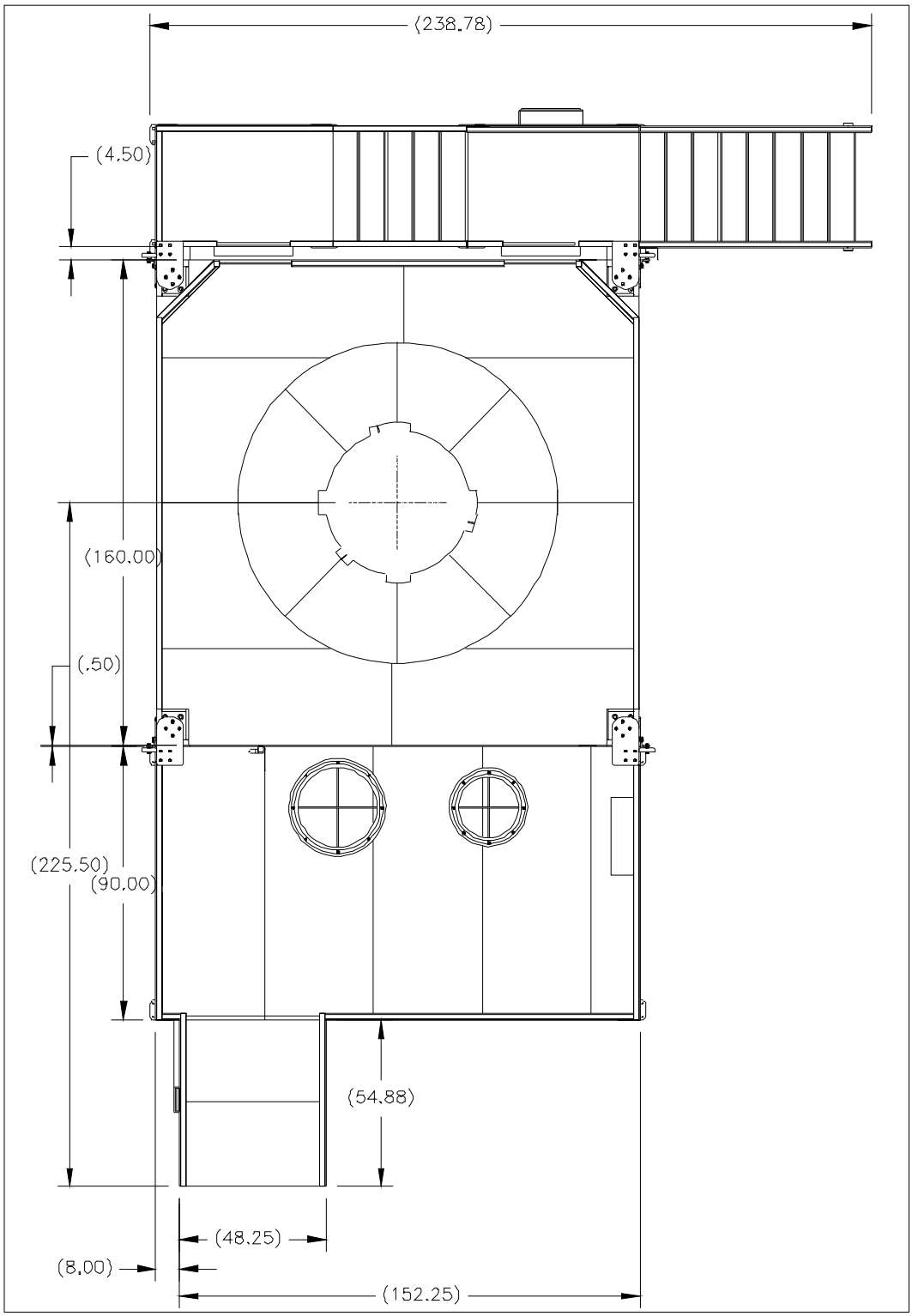

Figure WH II-I-12 – Elevated Work Platform

Figure WH II-I-13 – Hand Operated Torque Multiplier

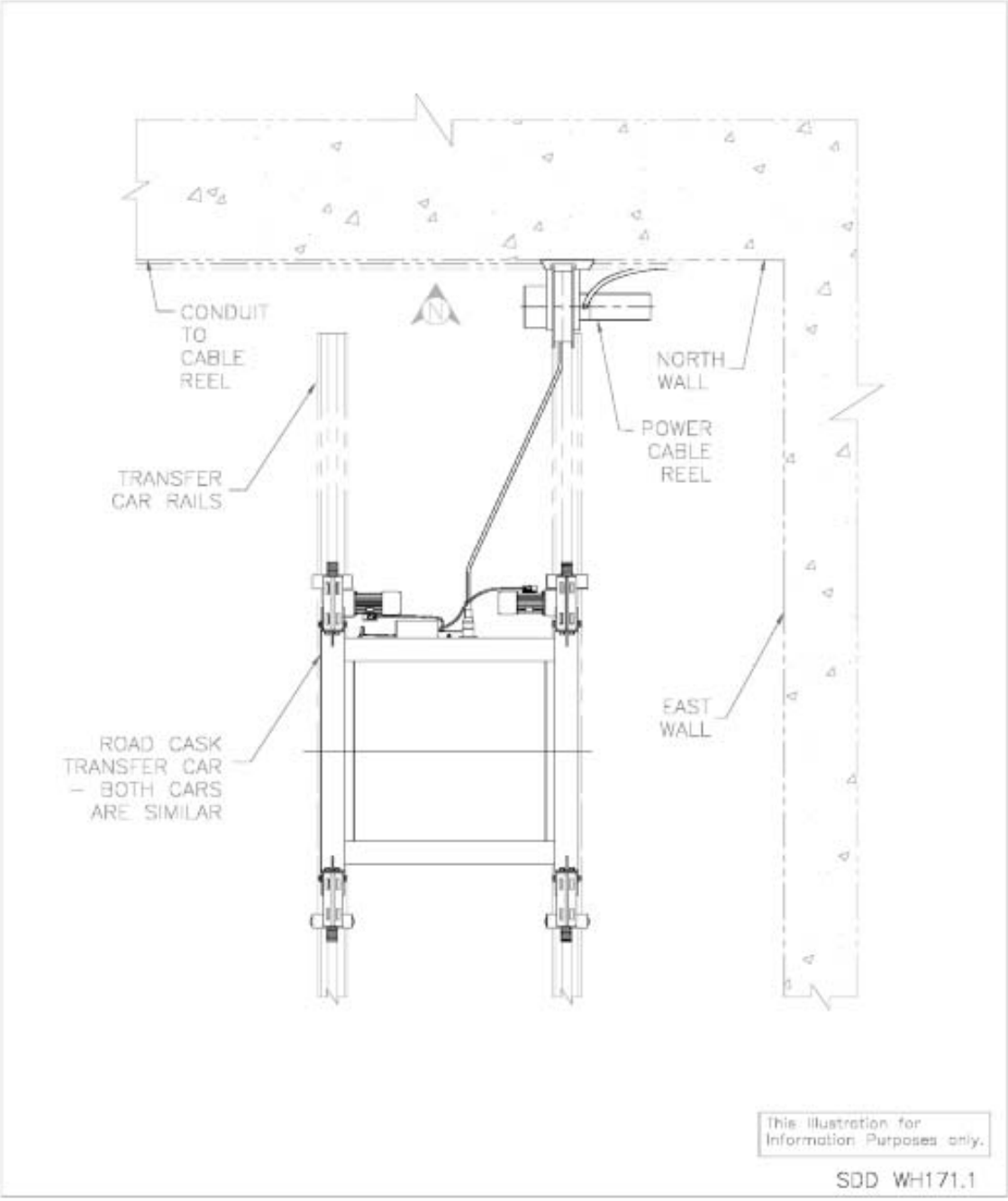

Figure WH II-I-14 – Road Cask Transfer Car in Cask Unloading Room

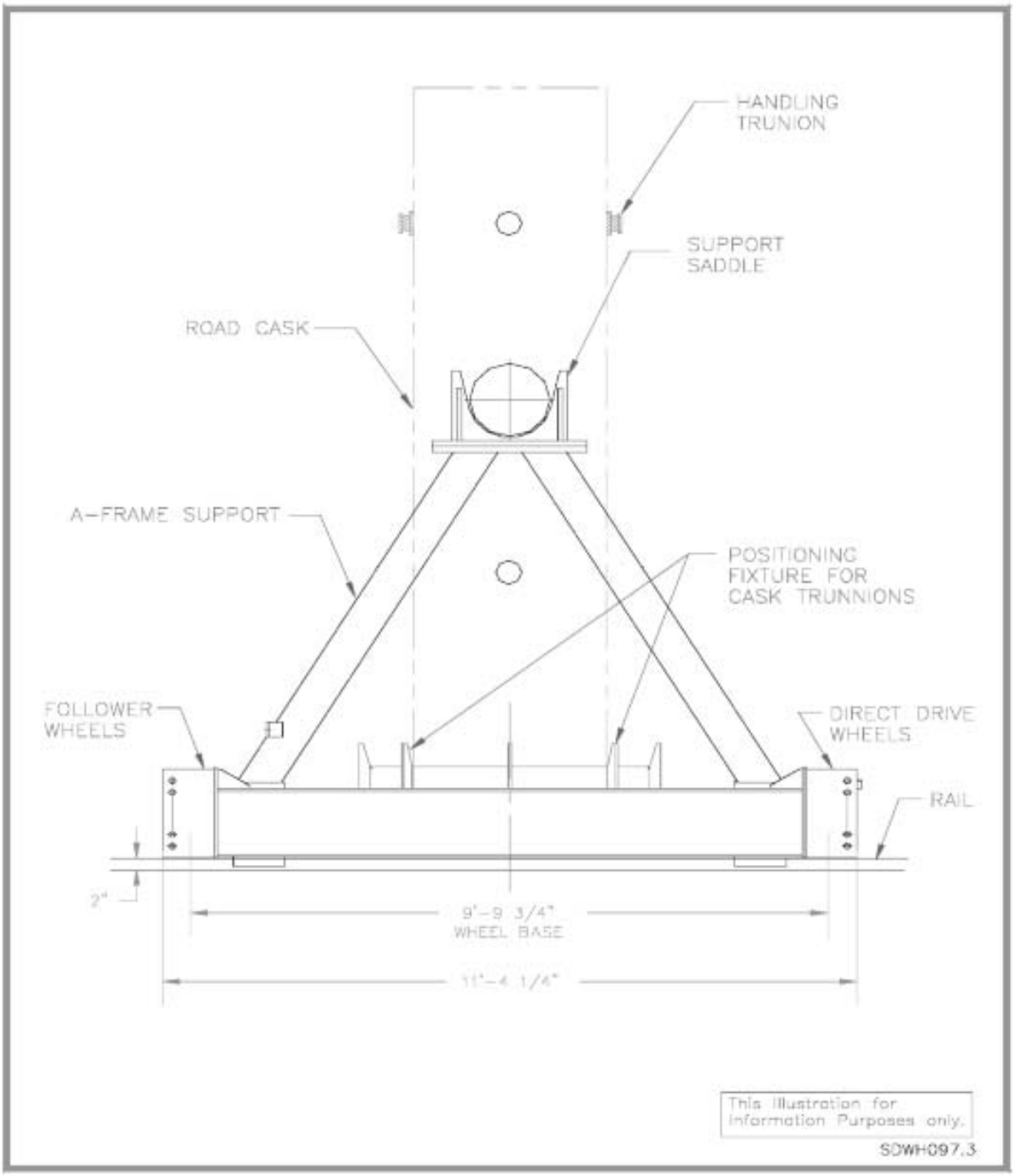

Figure WH II-I-15 – 72B Road Cask Transfer Car

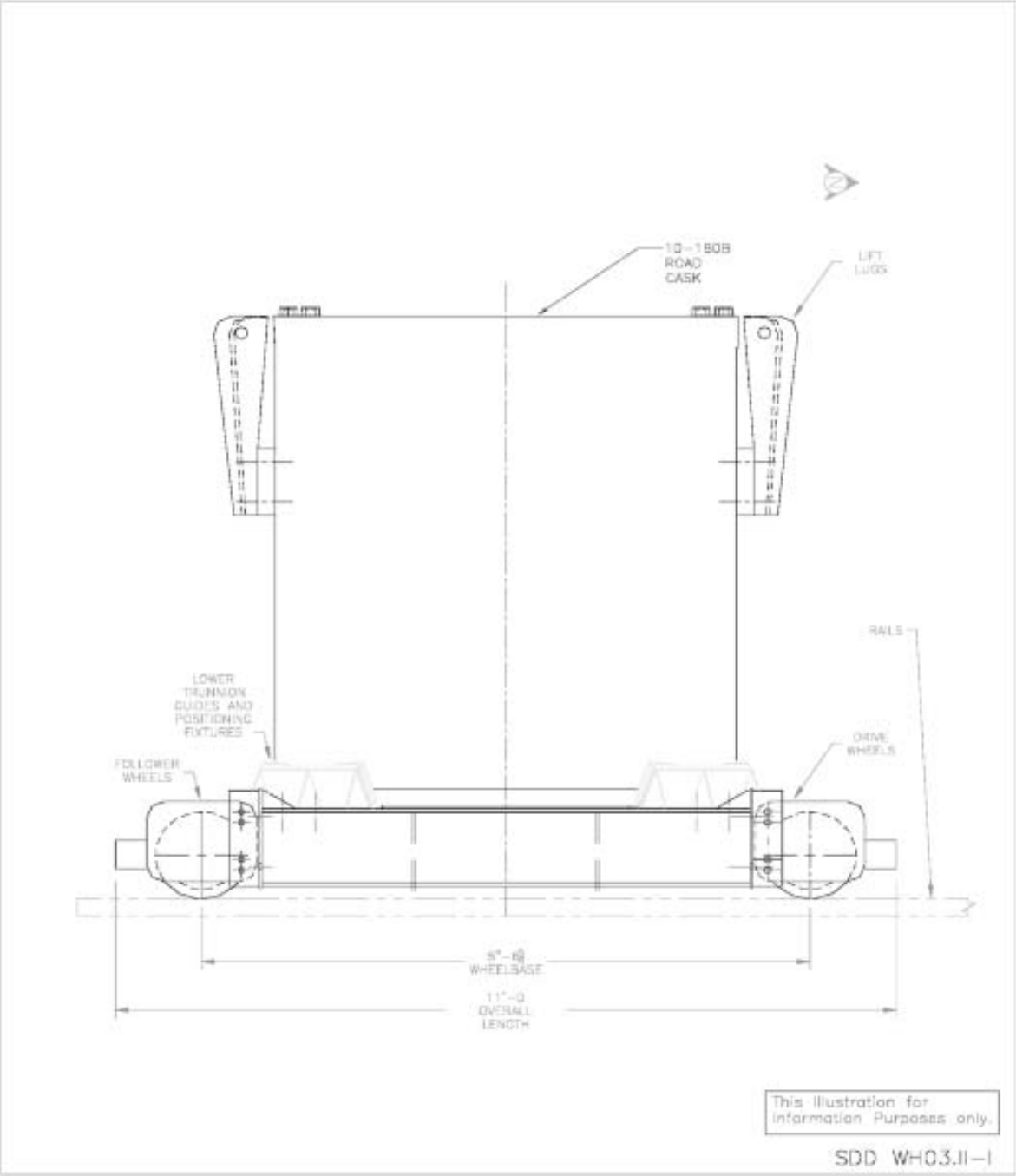

Figure WH II-I-16 – 10-160B/72B Road Cask Transfer Car Configured for 10-160B Casks

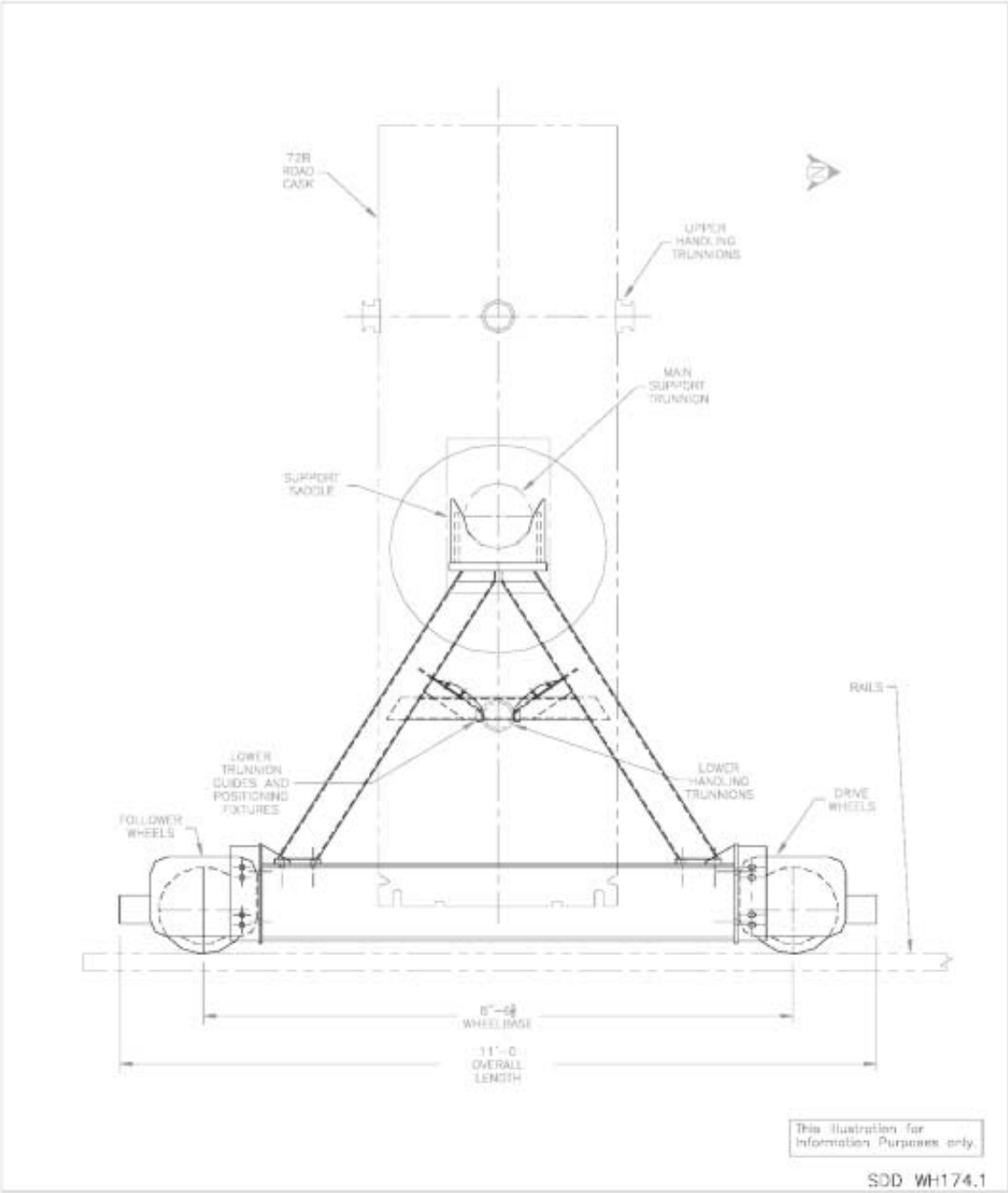

Figure WH II-I-17 – 10-160B/72B Road Cask Transfer Car Configured for 72B Casks

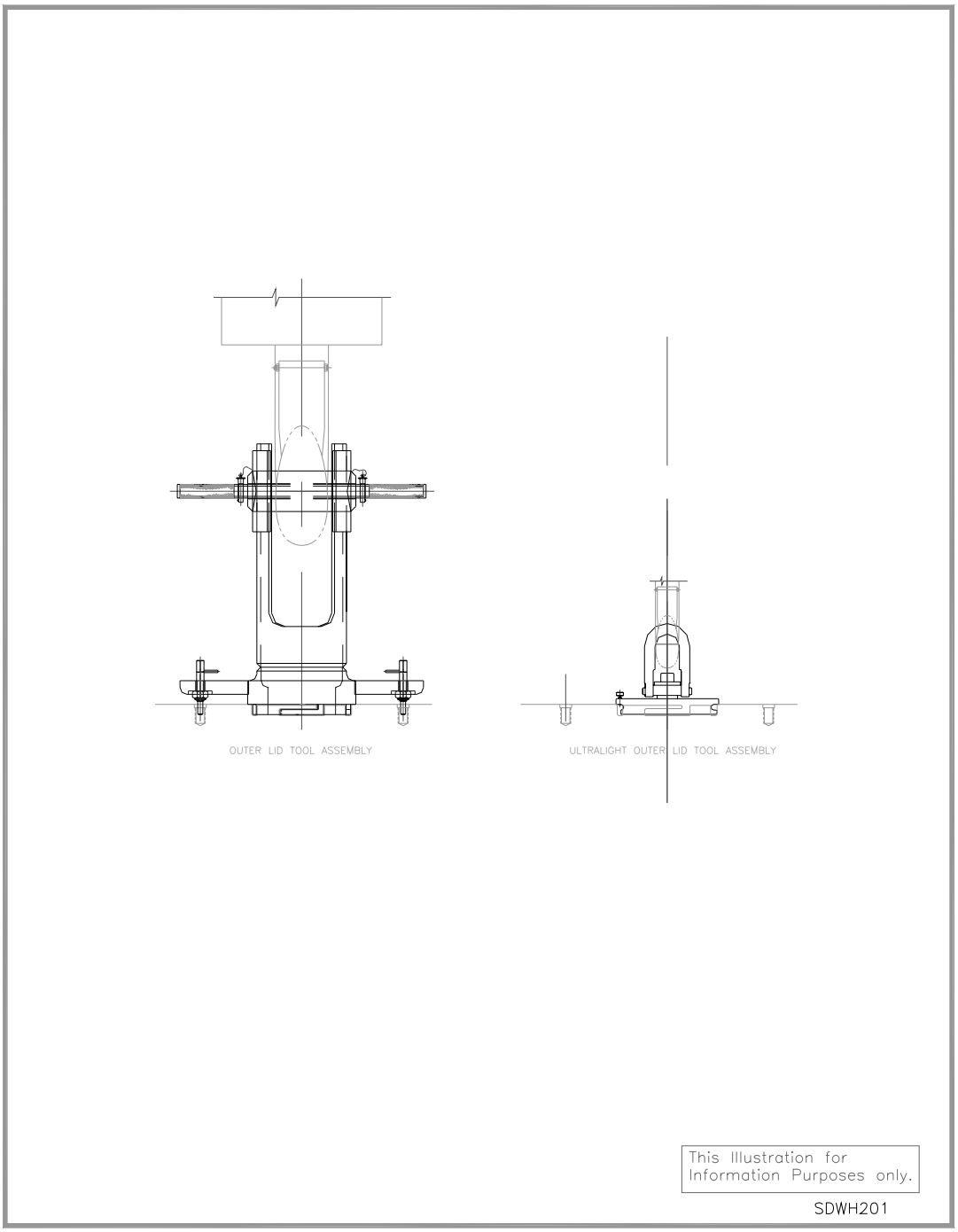

Figure WH II-I-18 – 72B Cask Outer Lid Tool / Ultralight 72B Cask Outer Lid Tool

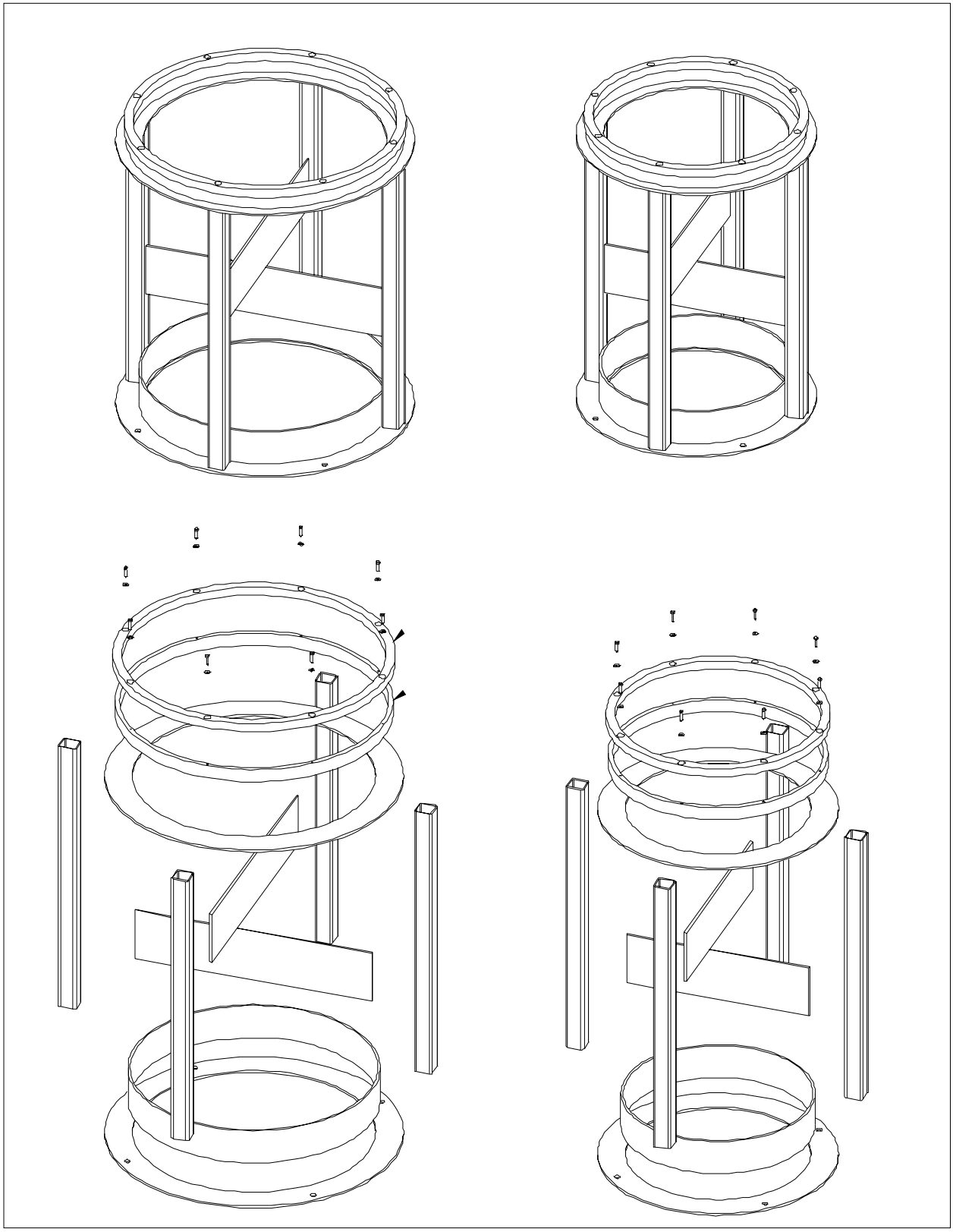

Figure WH II-I-19 – 72B Cask Outer Lid Storage Stand

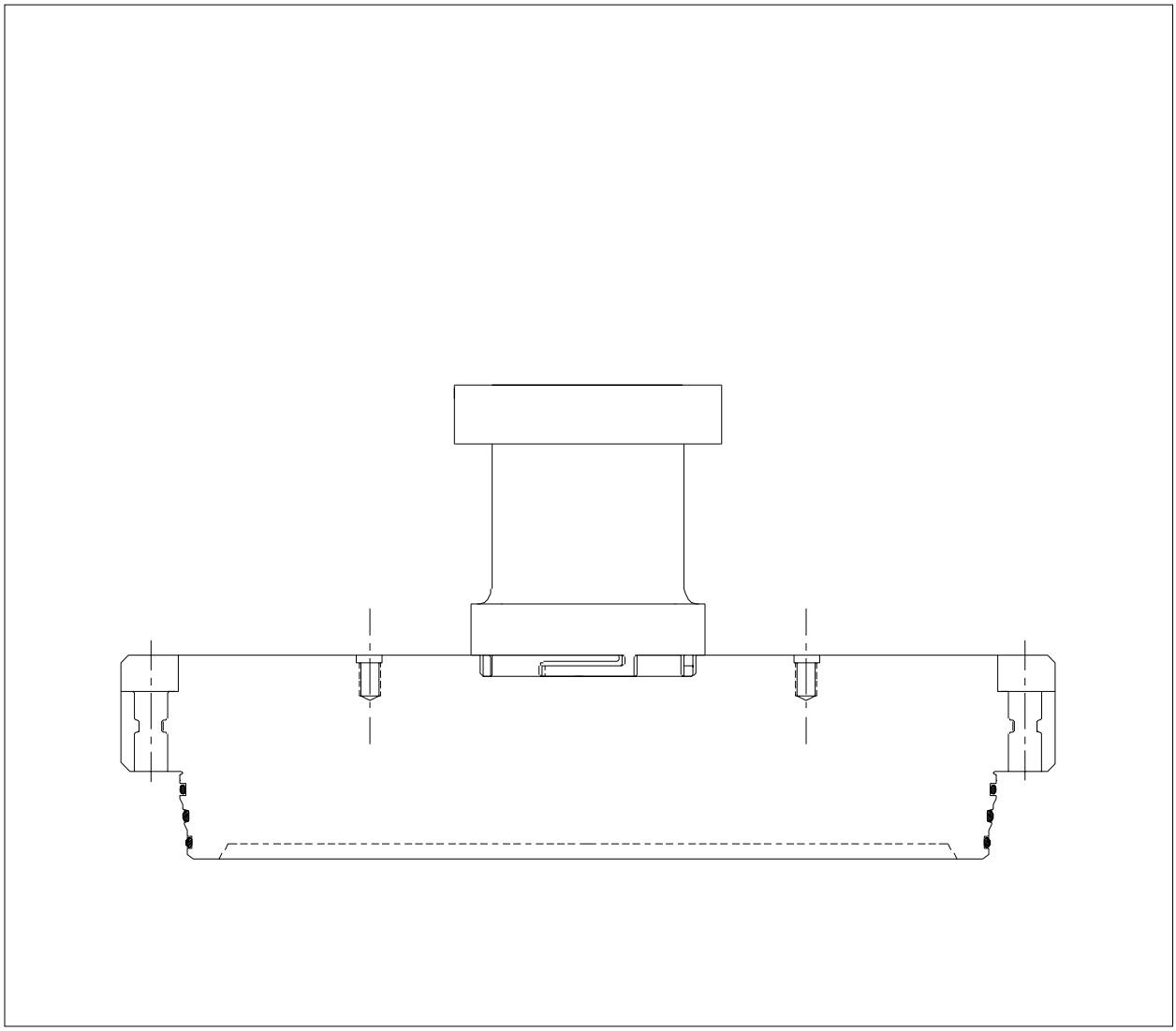

Figure WH II-I-20 – Inner Lid Lift Fixture

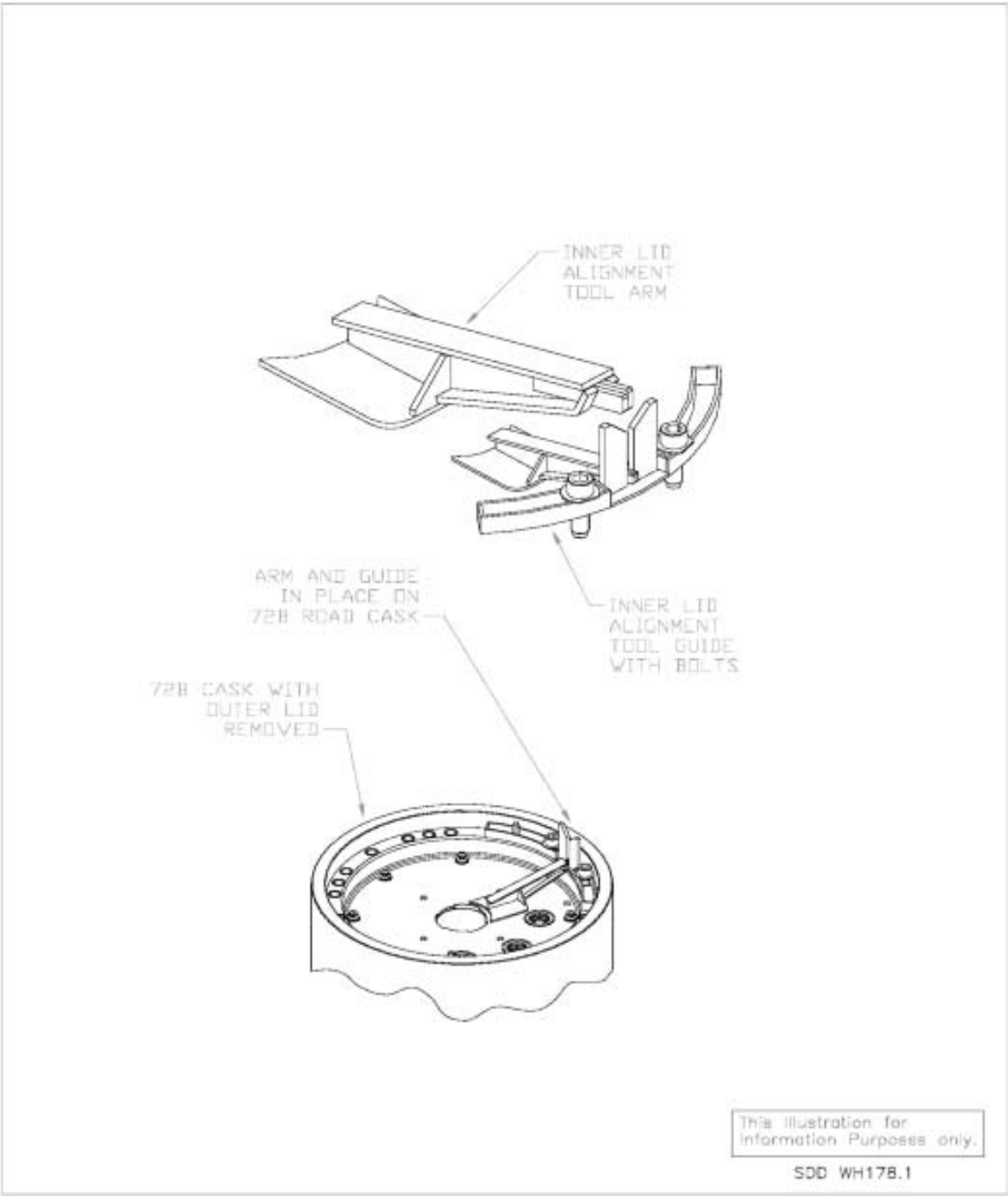

Figure WH II-I-21 – RH 72B Cask Inner Lid Alignment Tool

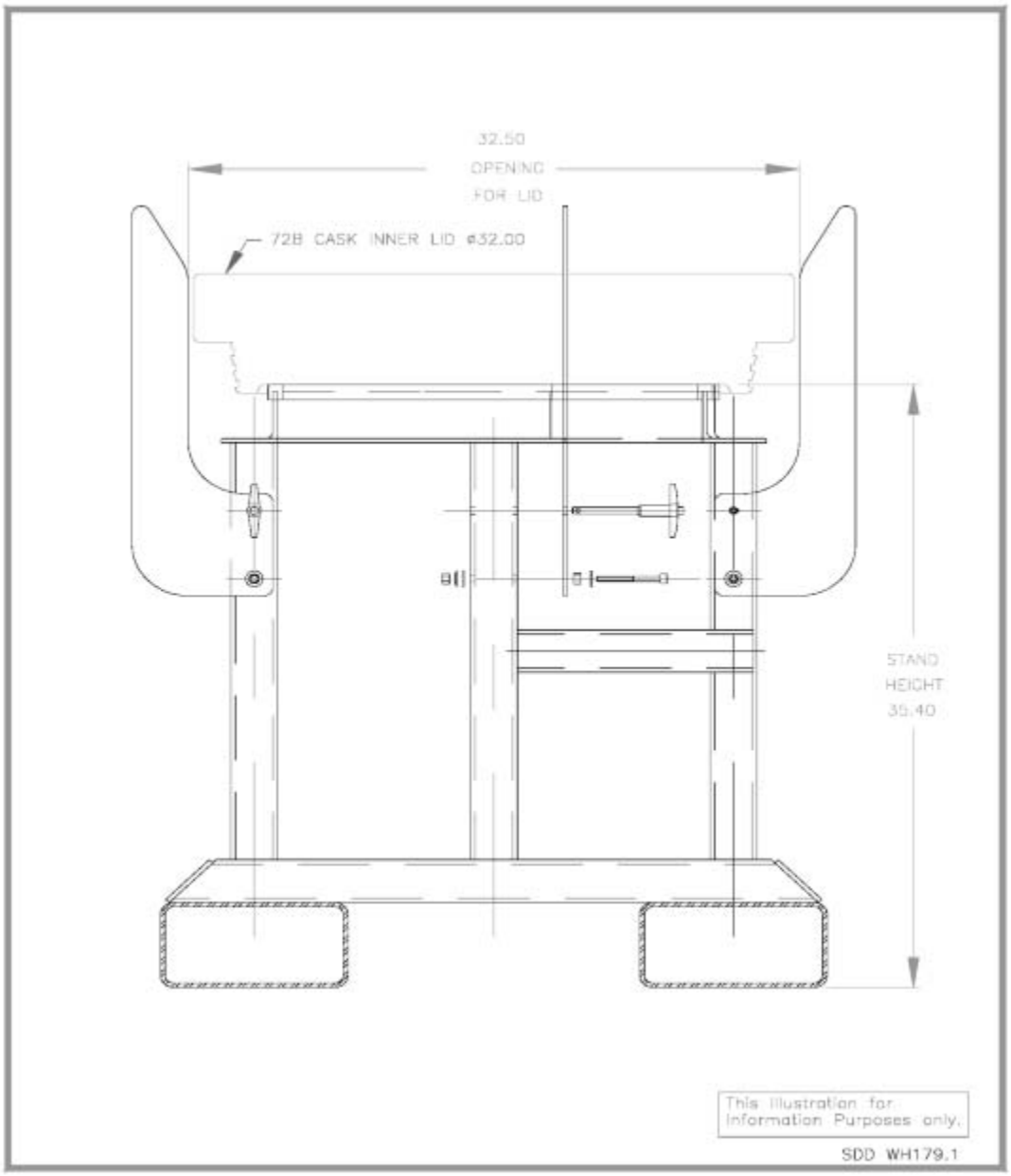

Figure WH II-I-22 – 72B Cask Inner Lid Storage Stand

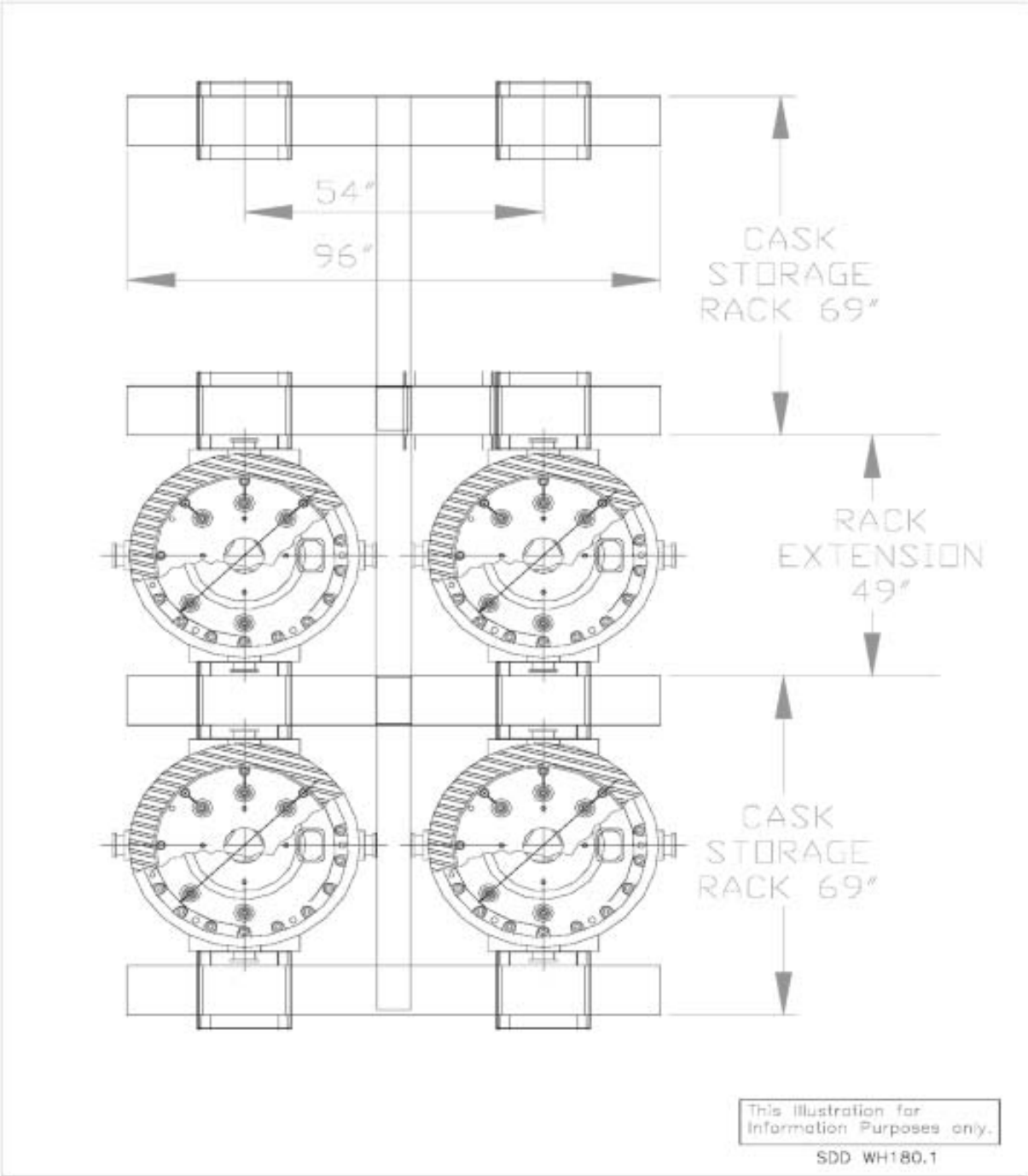

Figure WH II-I-23 – 72B Cask Storage Racks and Extensions

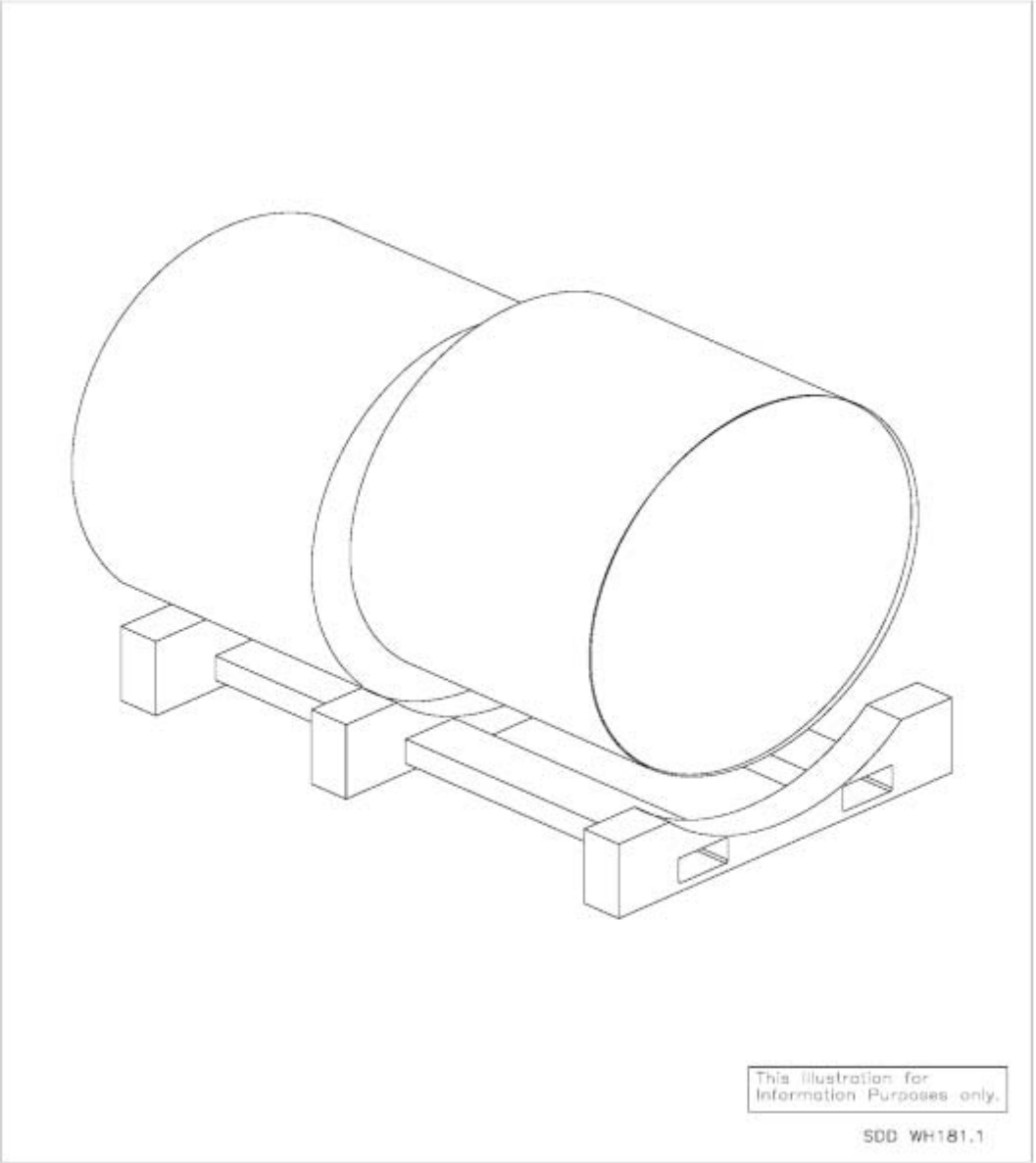

Figure WH II-I-24 – Impact Limiter Storage Rack

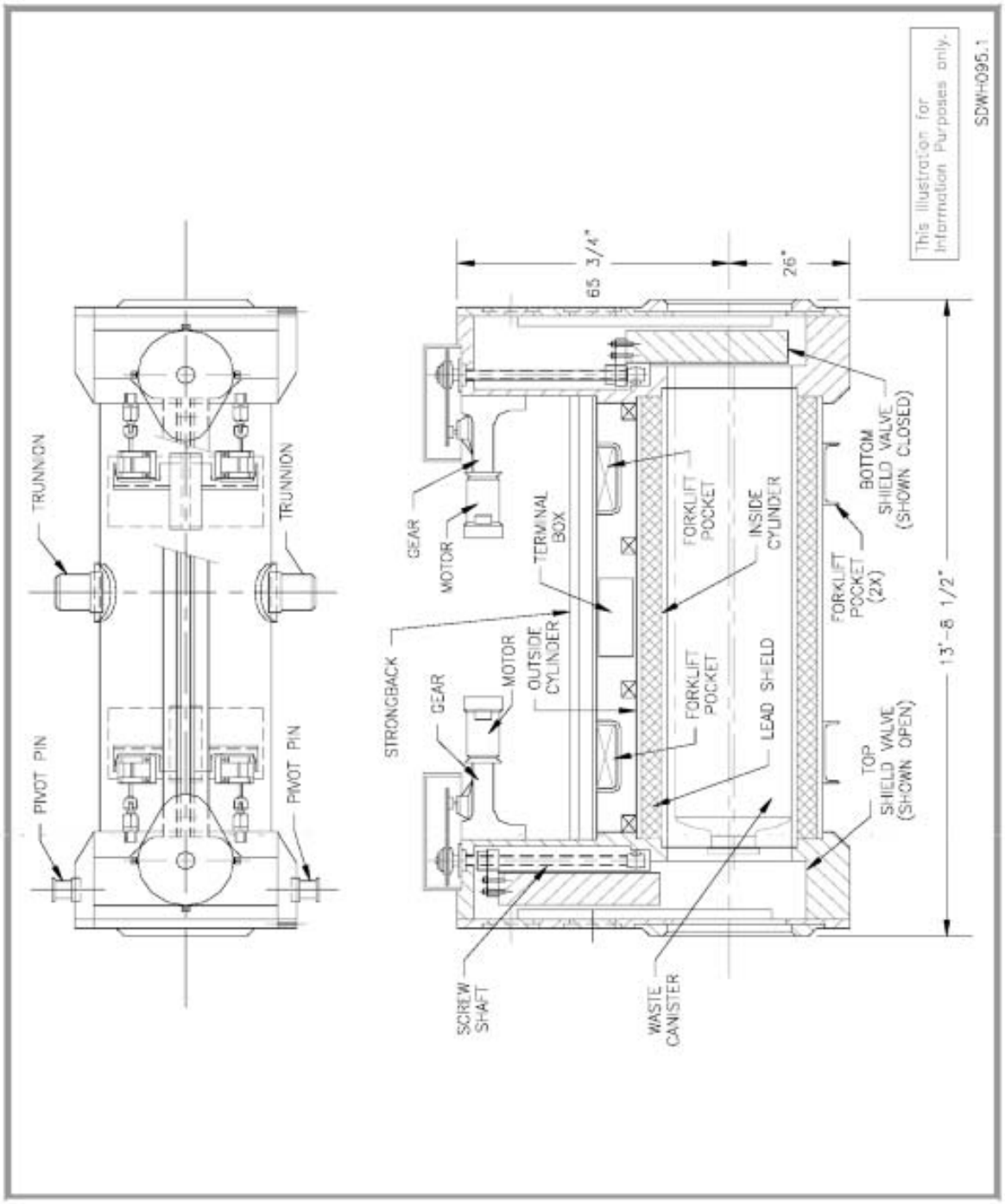

Figure WH II-I-25 – Facility Cask

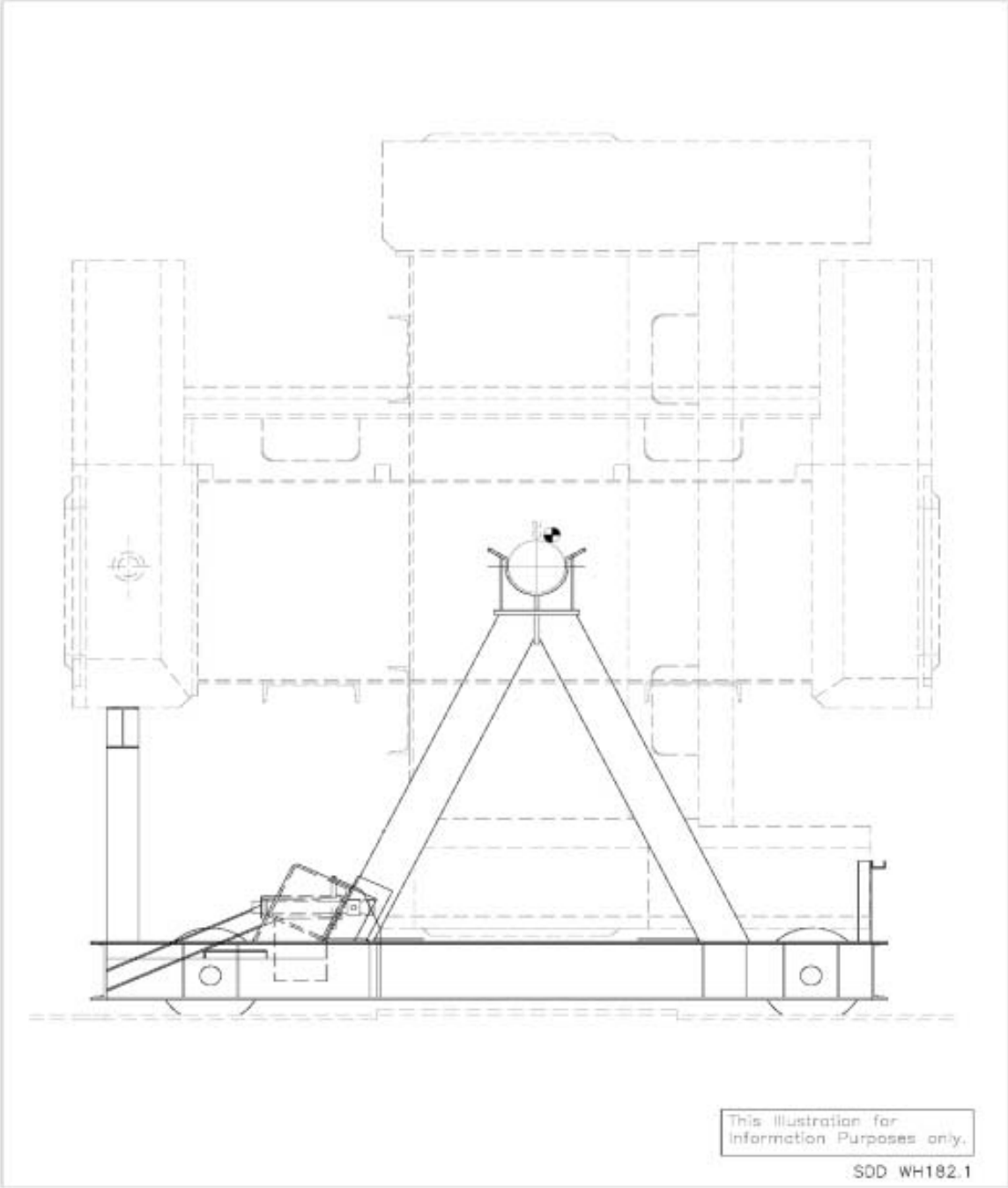

Figure WH II-I-26 – Facility Cask Transfer Car

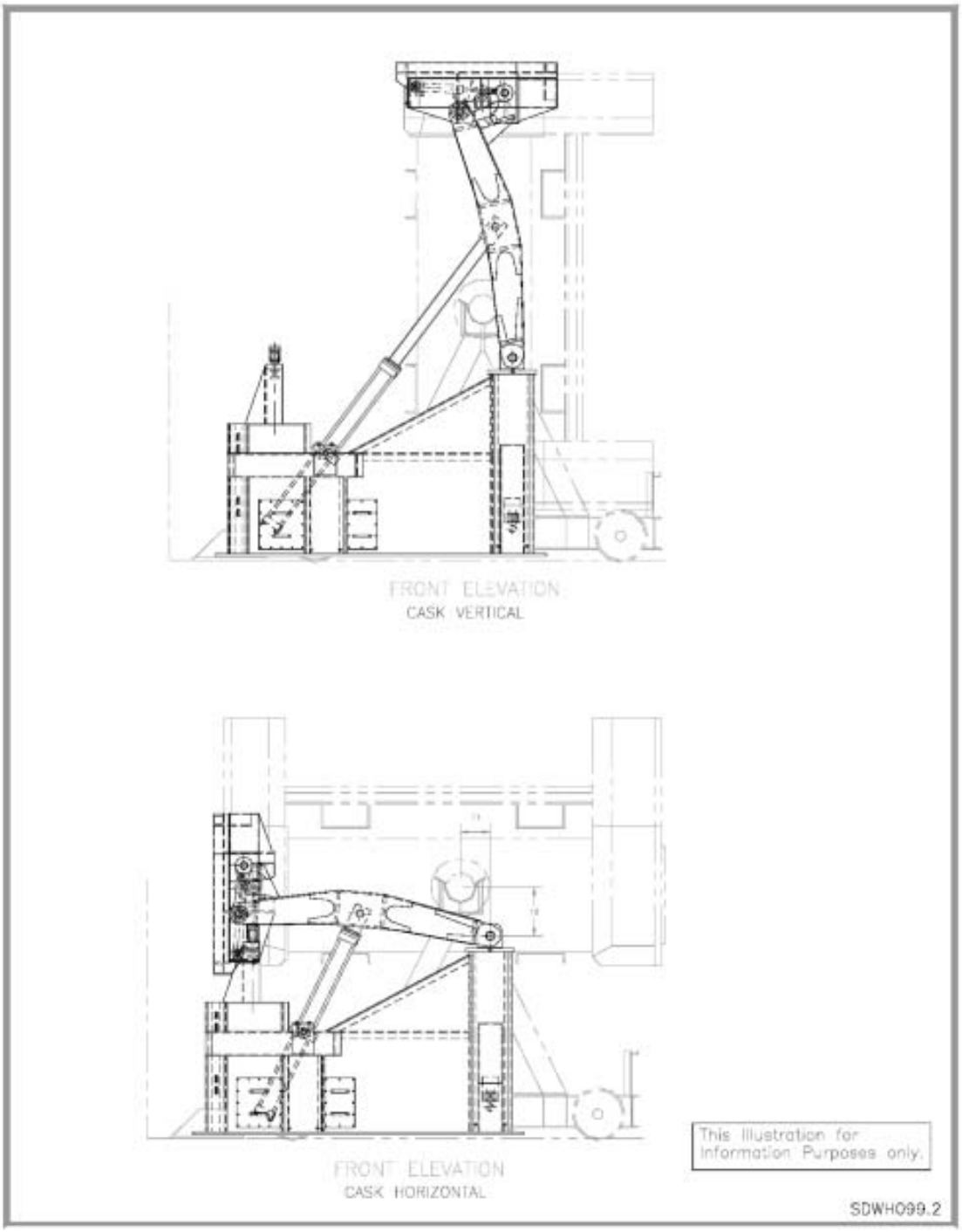

Figure WH II-I-27 – Facility Cask Rotating Device

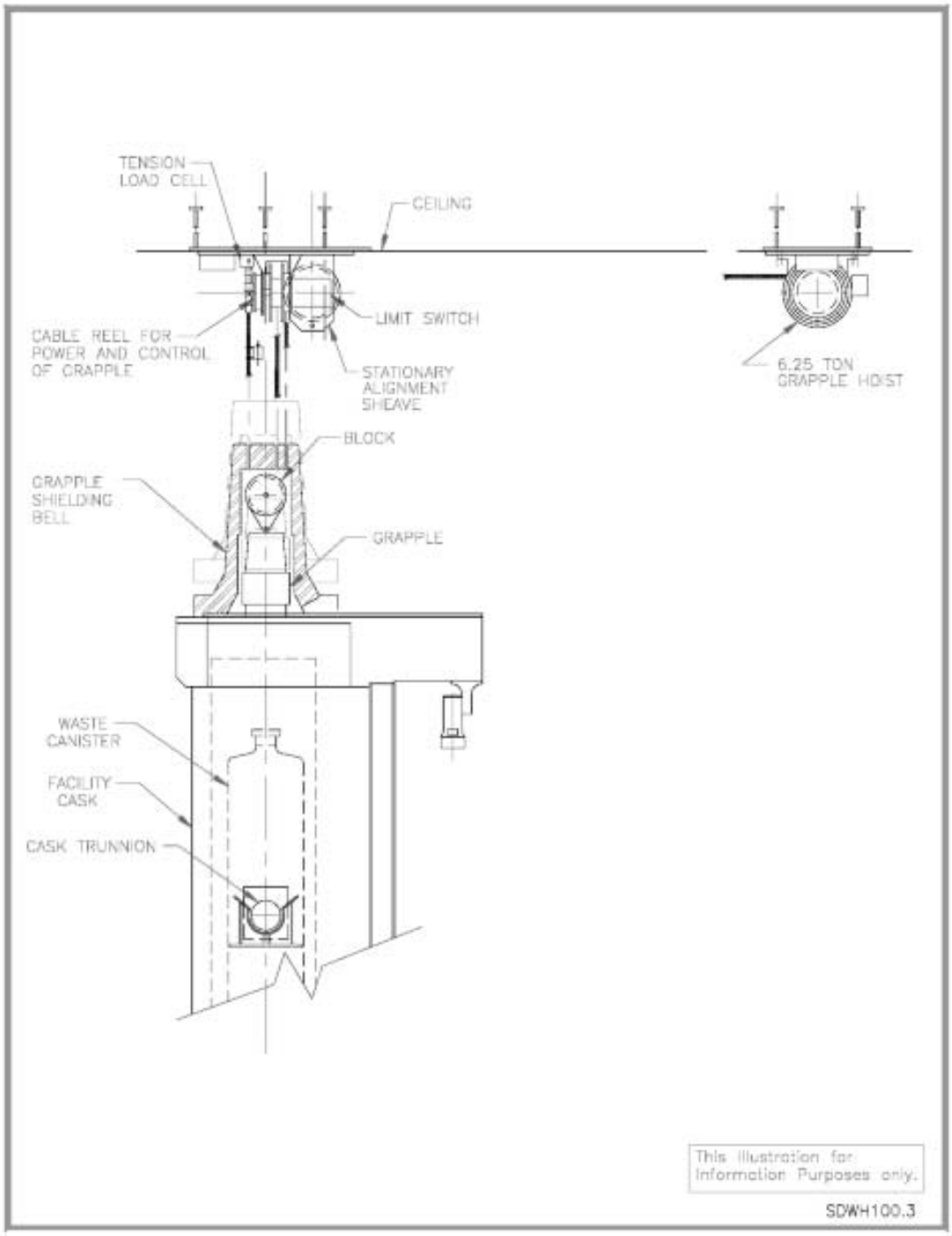

Figure WH II-I-28 – 6.25-Ton Grapple Hoist

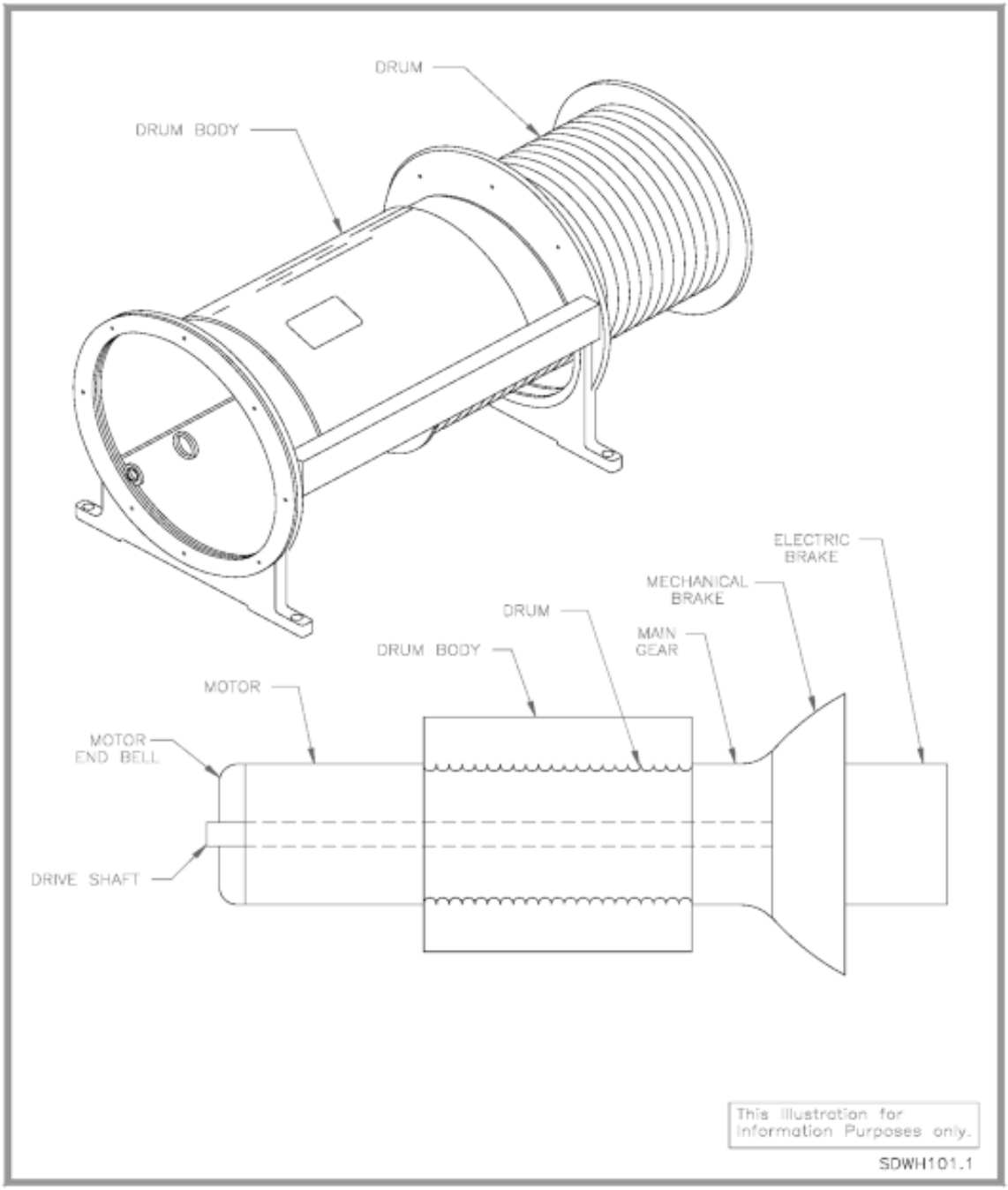

Figure WH II-I-29 – Grapple Hoist Drive

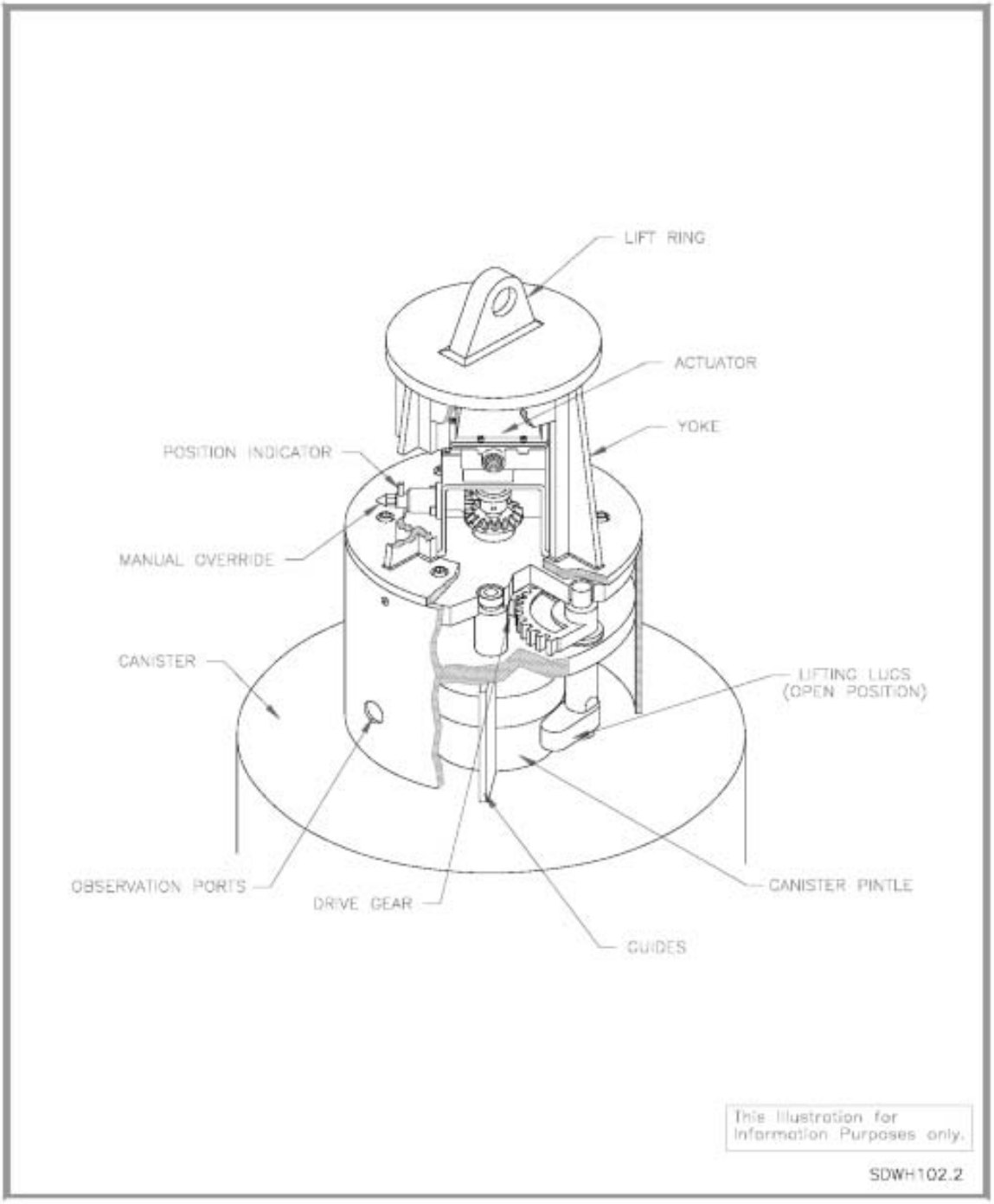

Figure WH II-I-30 – Facility Grapple

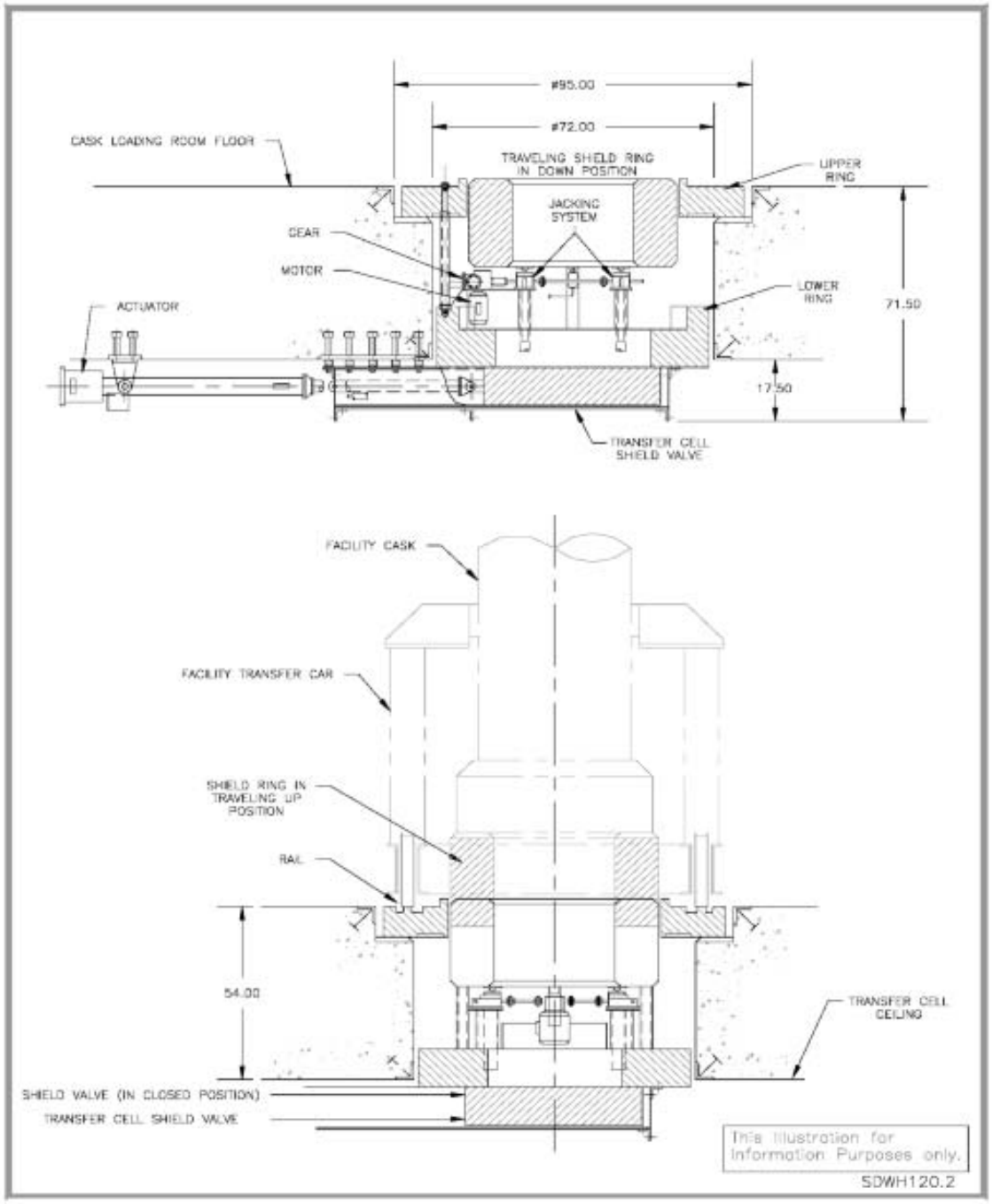

Figure WH II-I-31 – Telescoping Port Shield

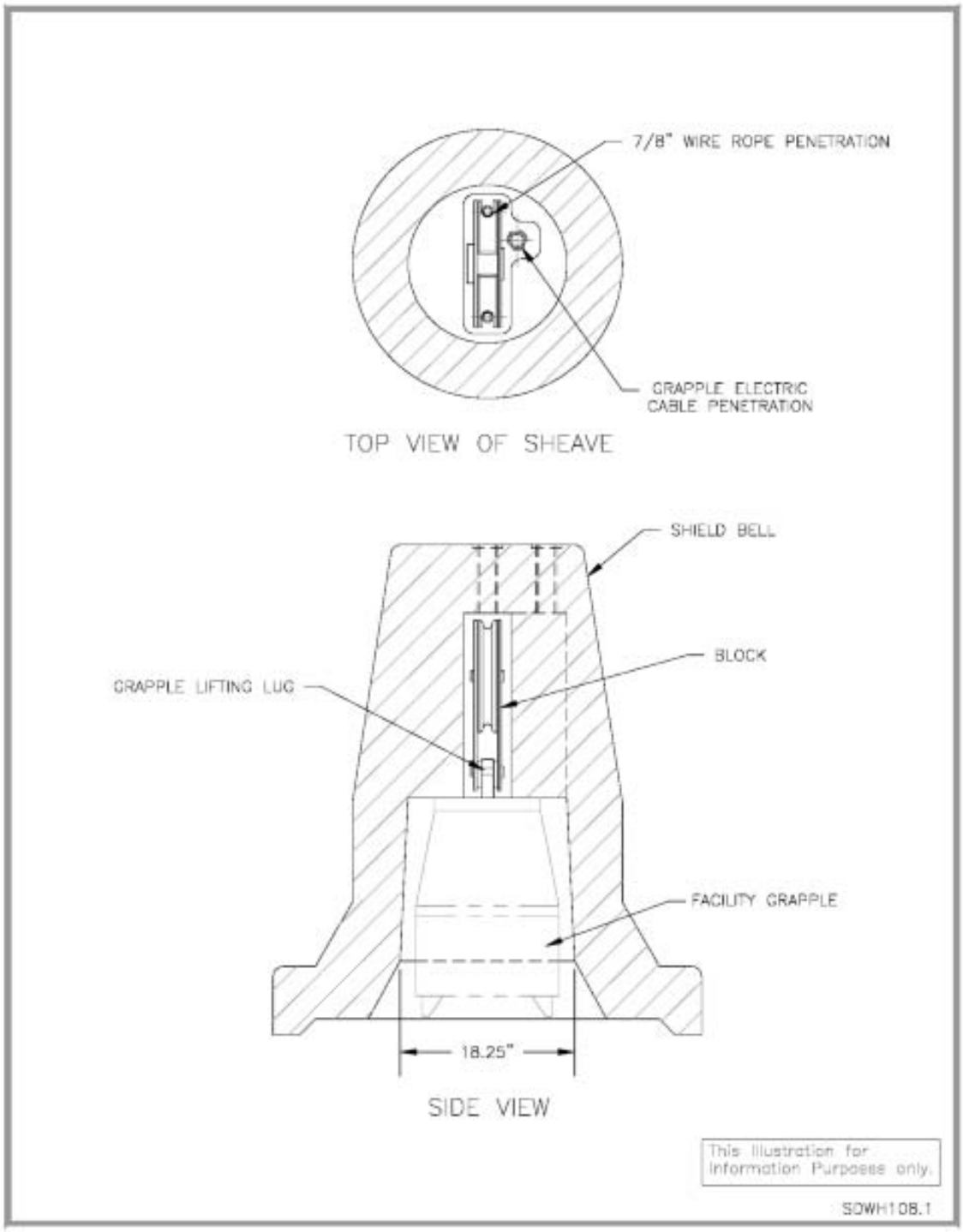

Figure WH II-I-32 – Shield Bell and Block

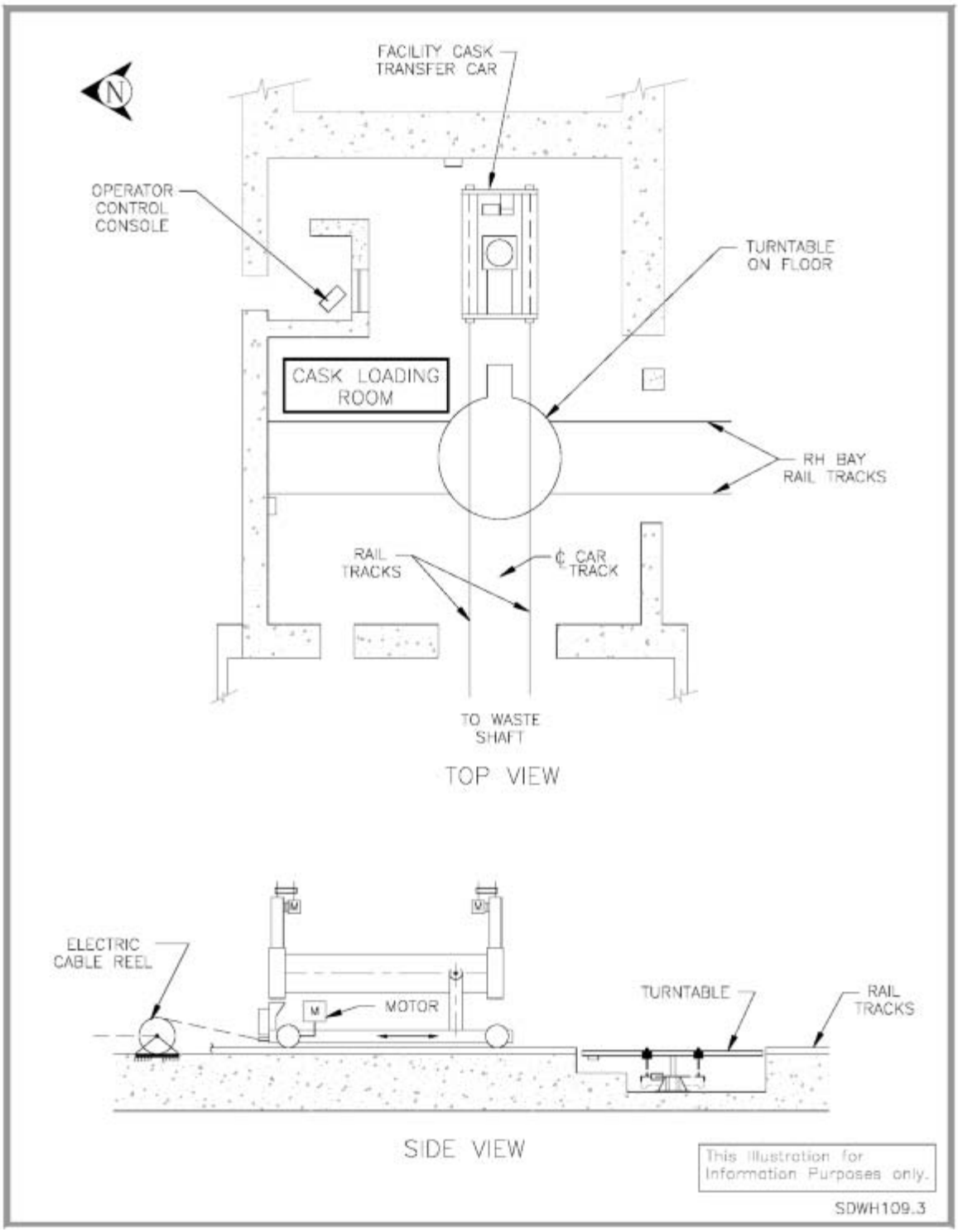

Figure WH II-I-33 – Facility Cask Turntable

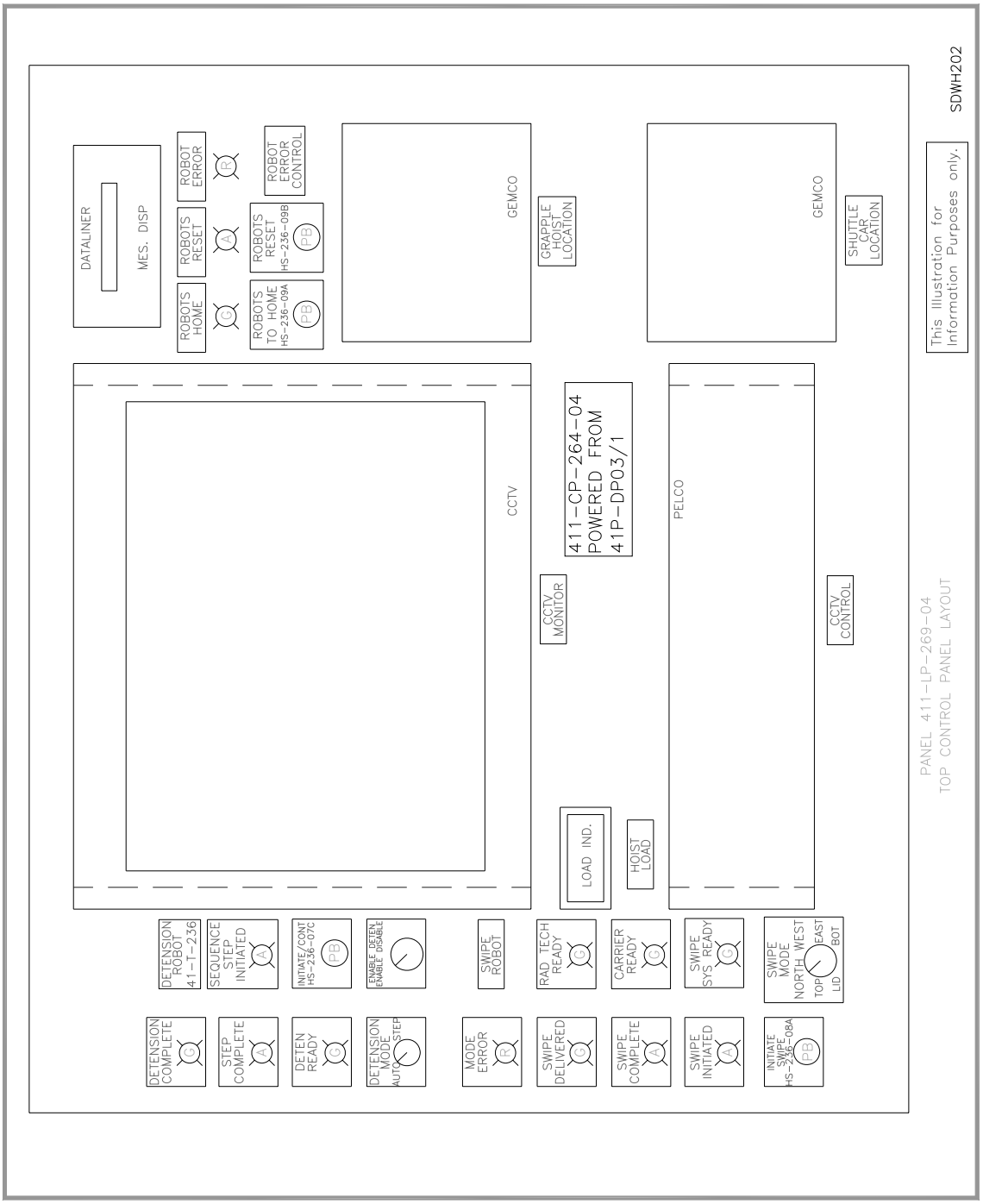

Figure WH II-I-34 – CTS Main Operator Control Panel (Upper Section)

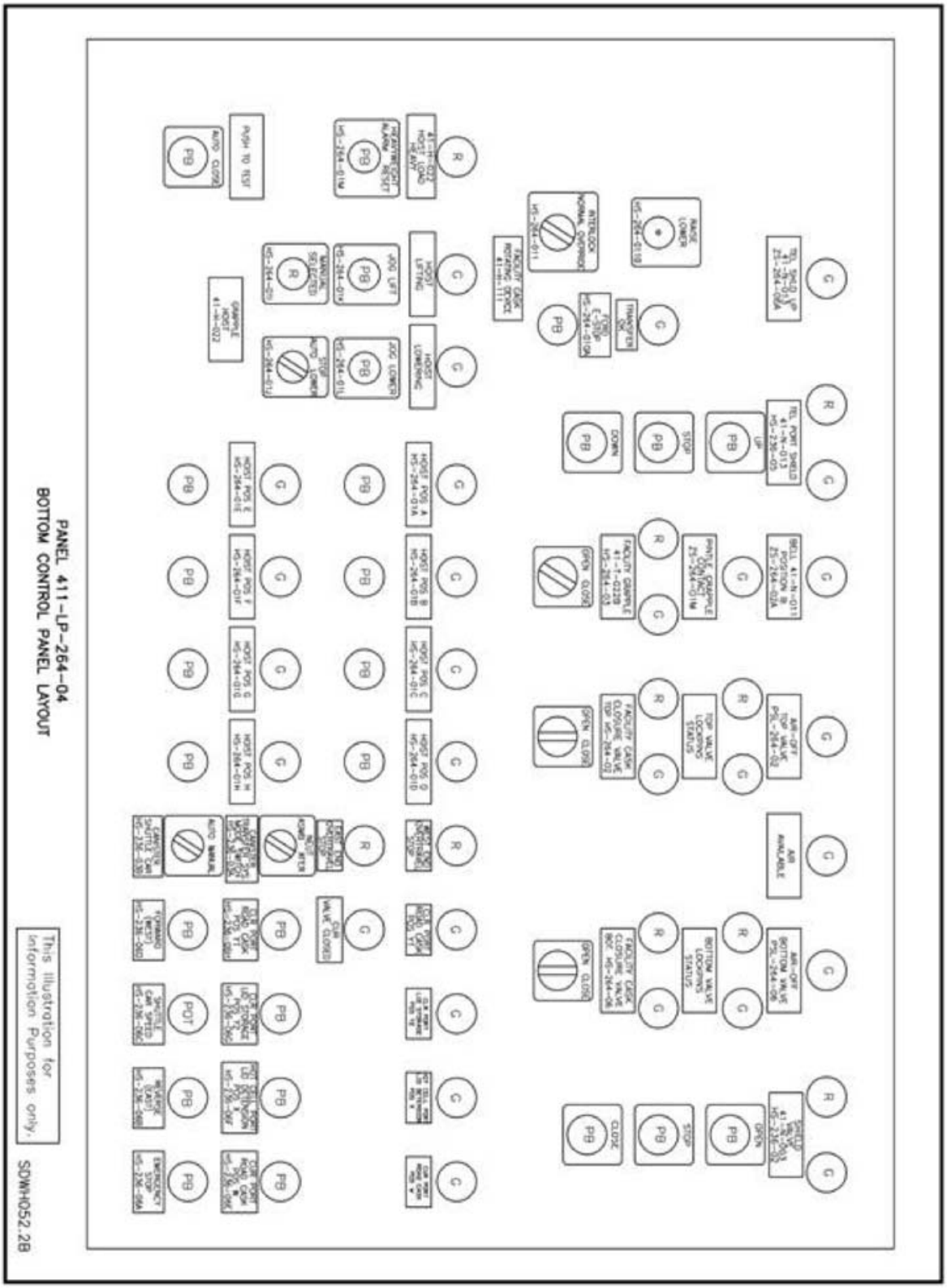

Figure WH II-I-35 – Cask Loading Room Operator Control Console (Lower Section)

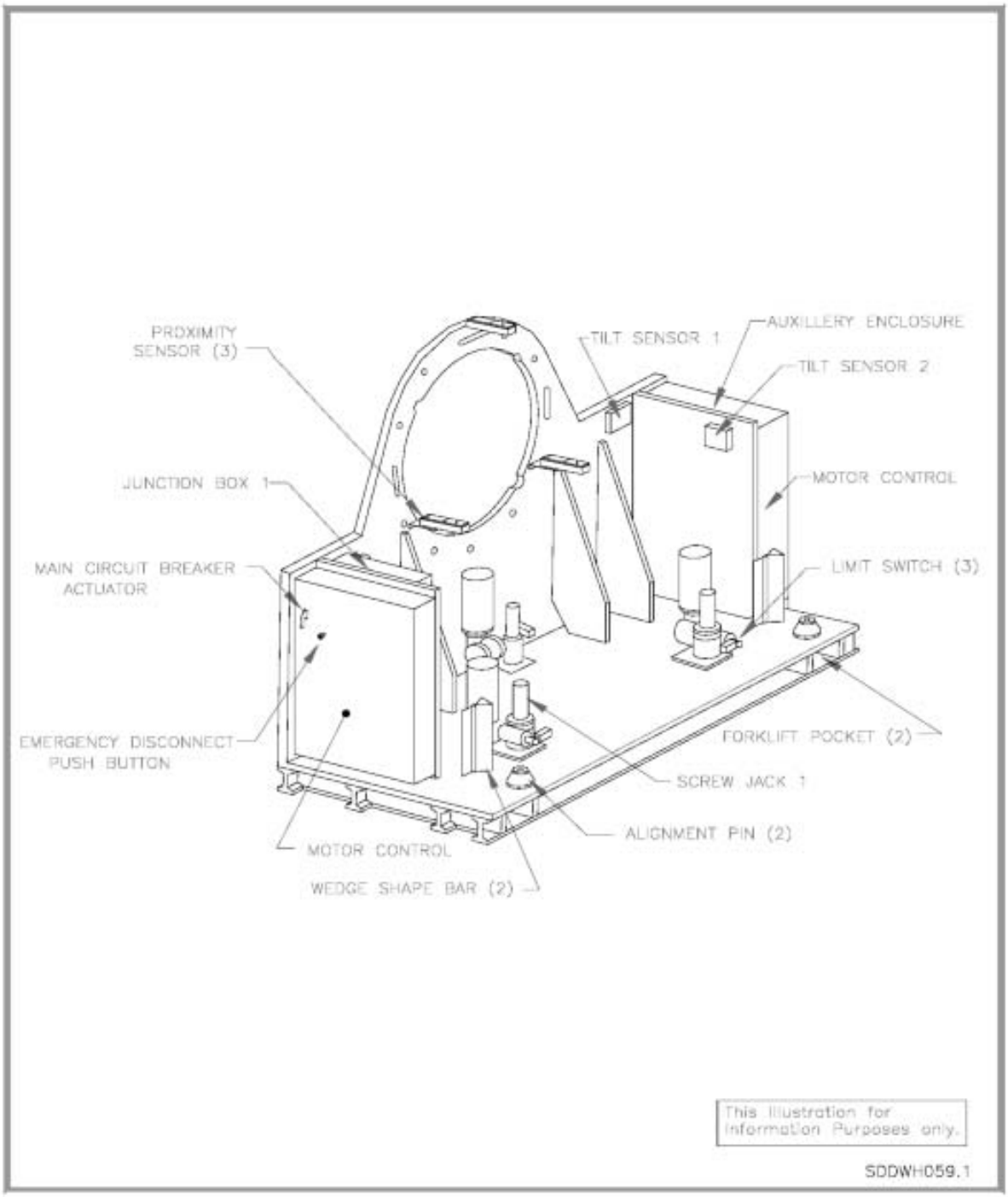

Figure WH II-I-36 – Alignment Fixture

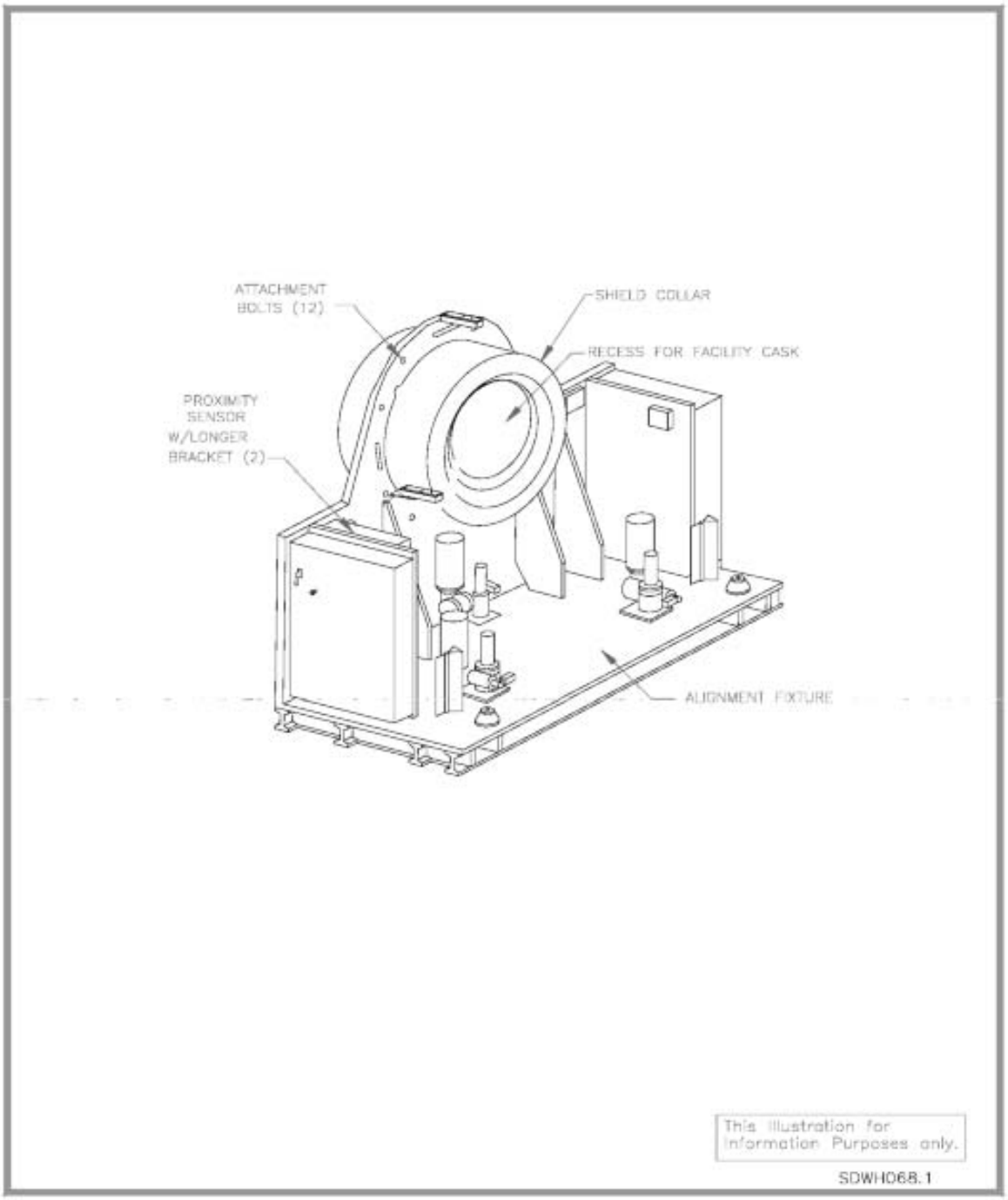

Figure WH II-I-37 – Alignment Fixture with Shield Collar

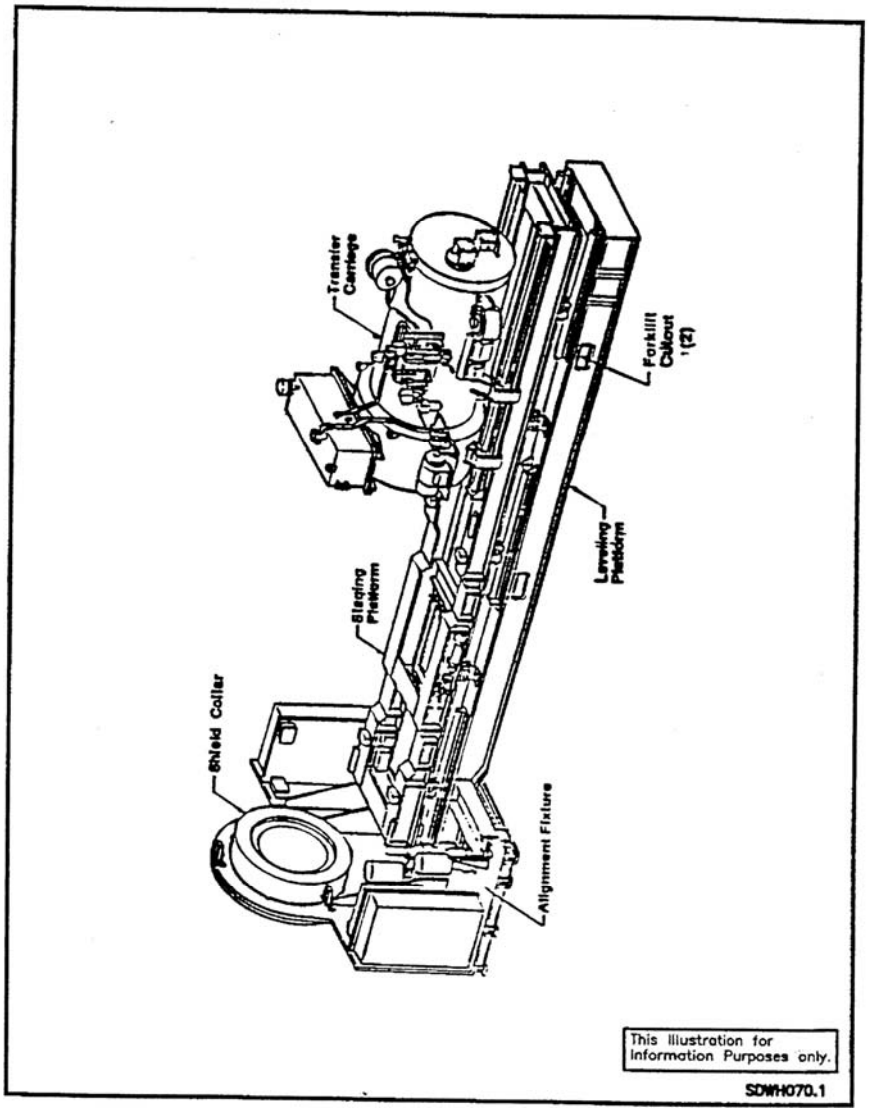

Figure WH II-I-38 – Waste Transfer Machine

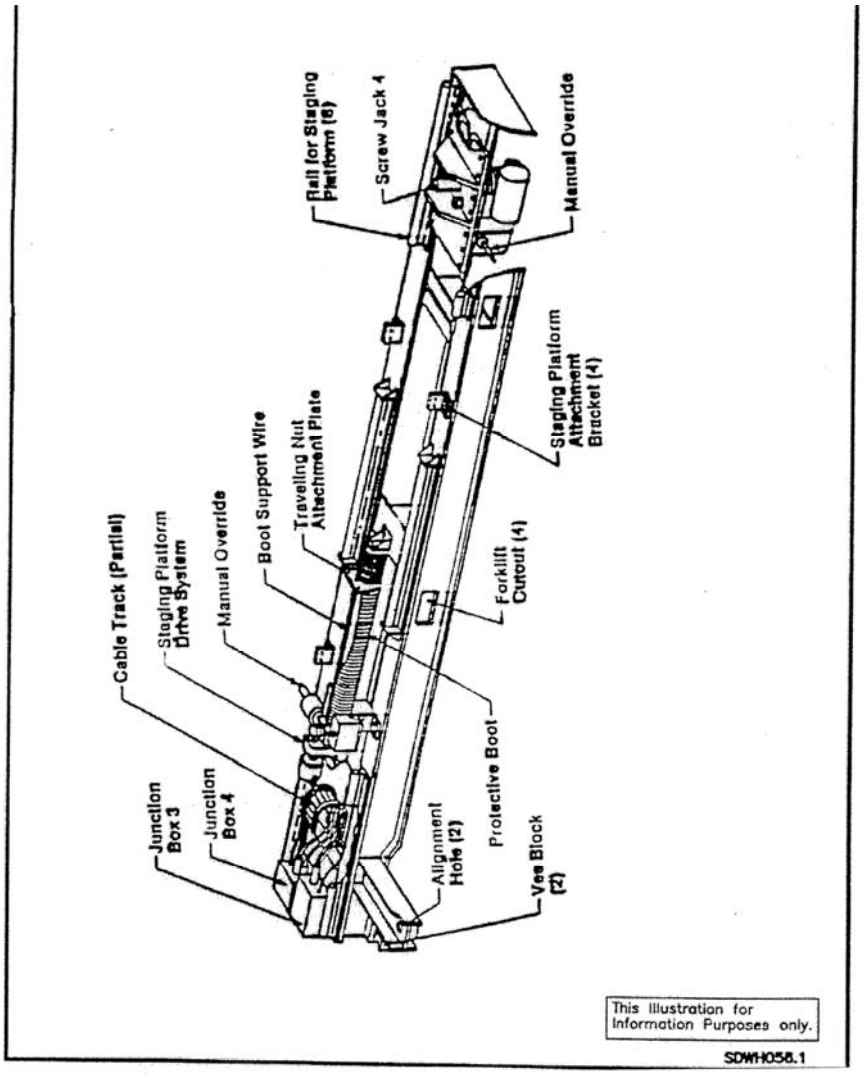

Figure WH II-I-39 – Leveling Platform

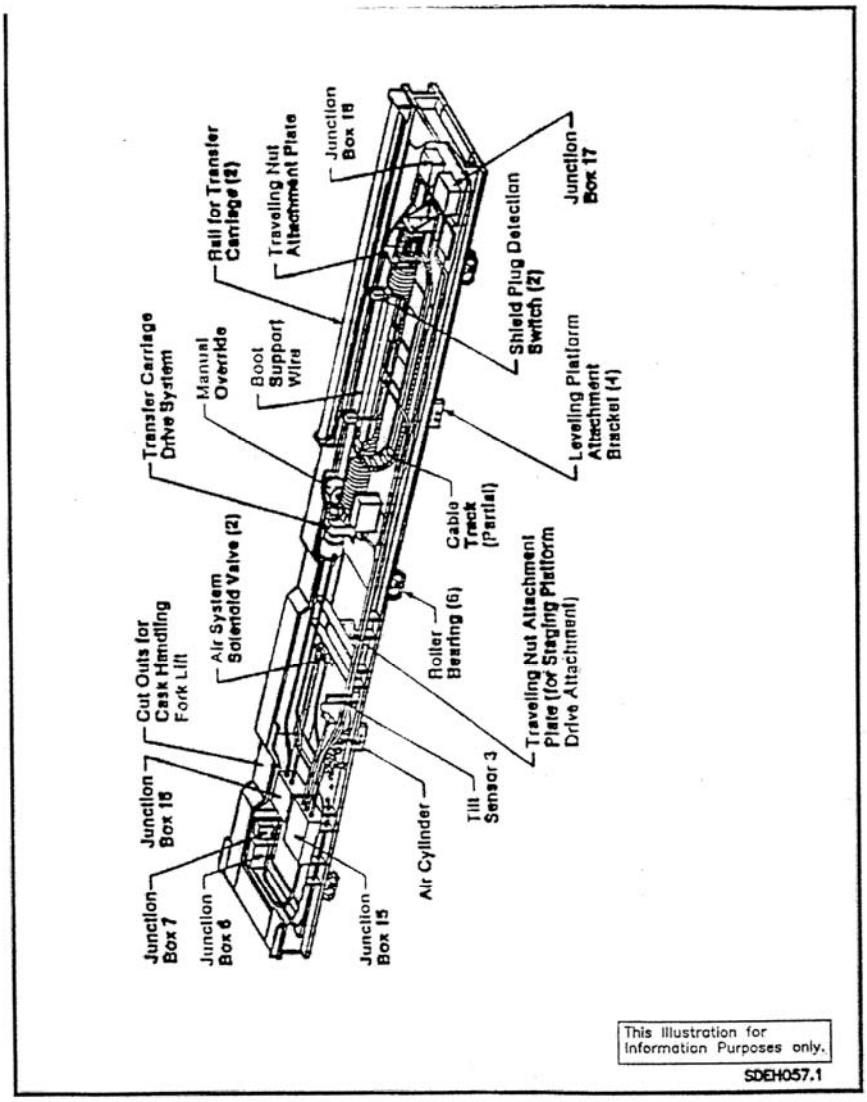

Figure WH II-I-40 – Staging Platform

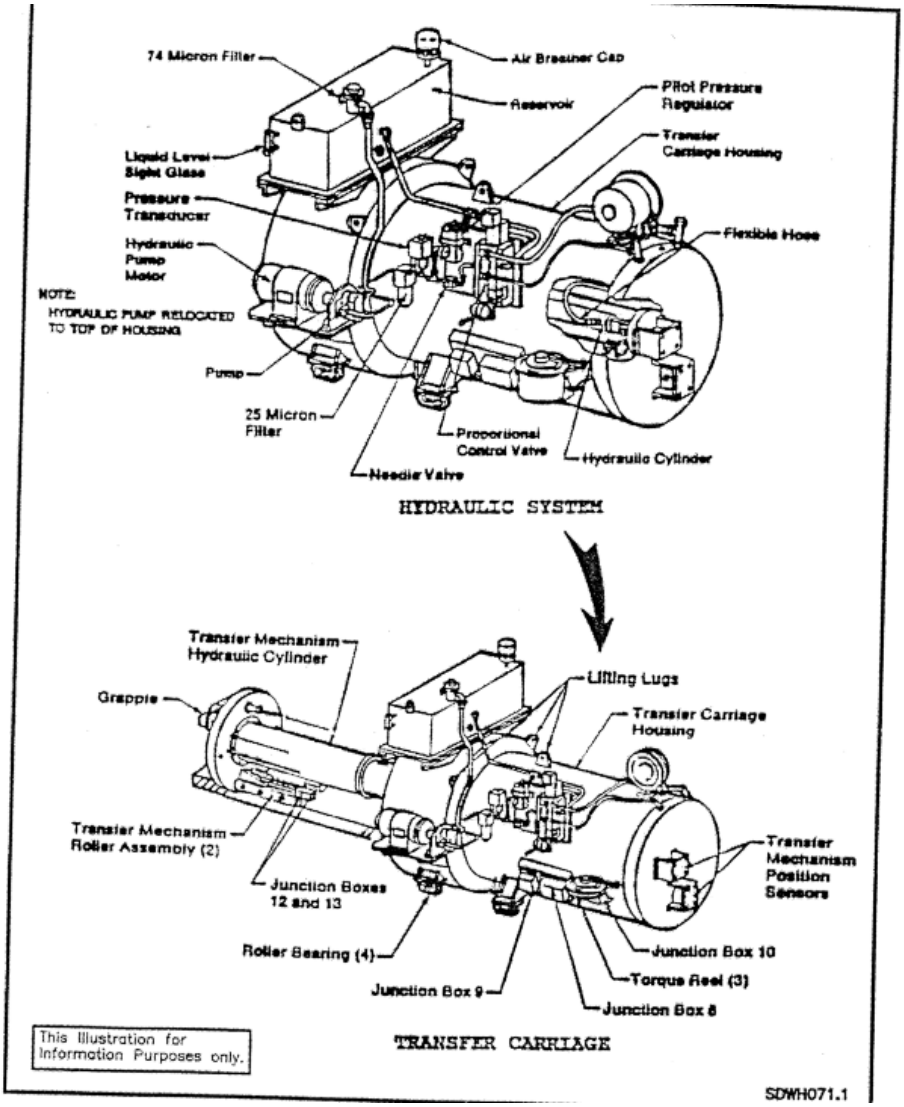

Figure WH II-I-41 – Transfer Carriage

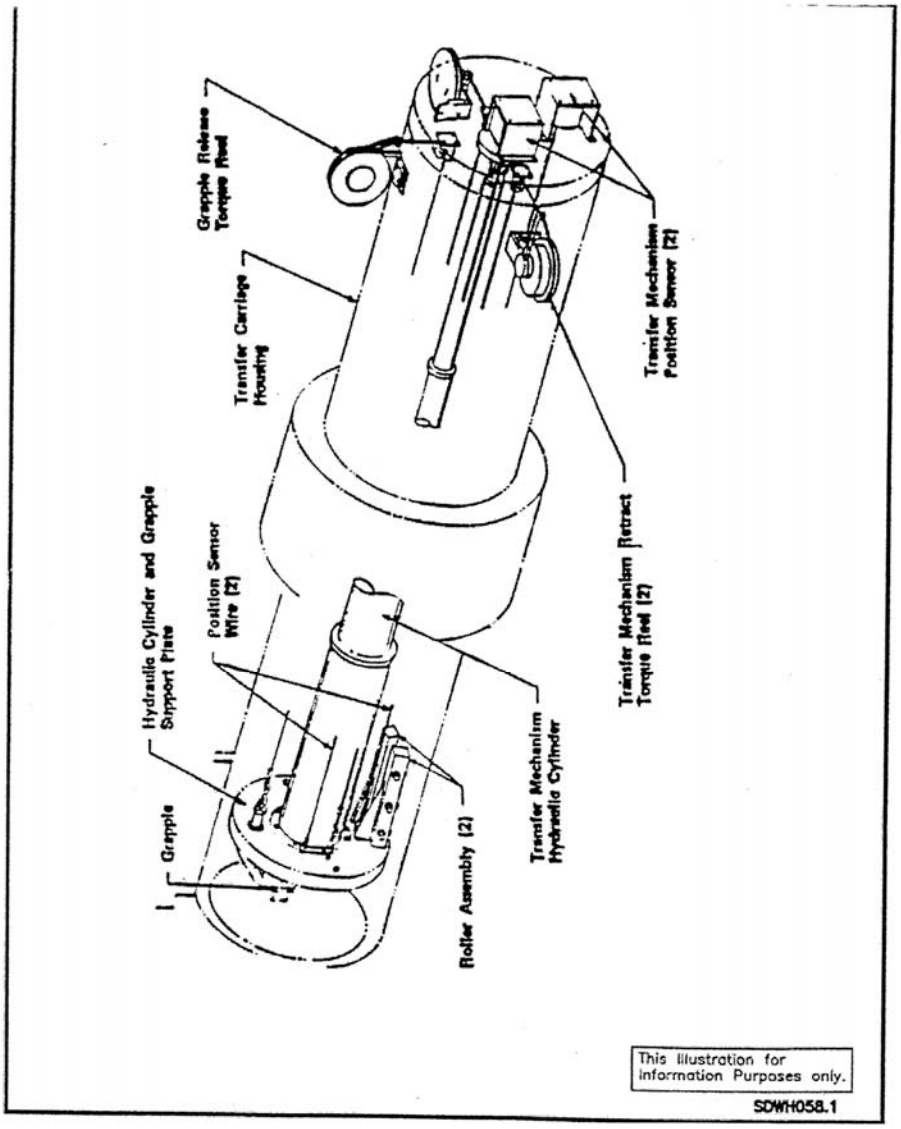

Figure WH II-I-42 – Transfer Mechanism and Grapple Override Features

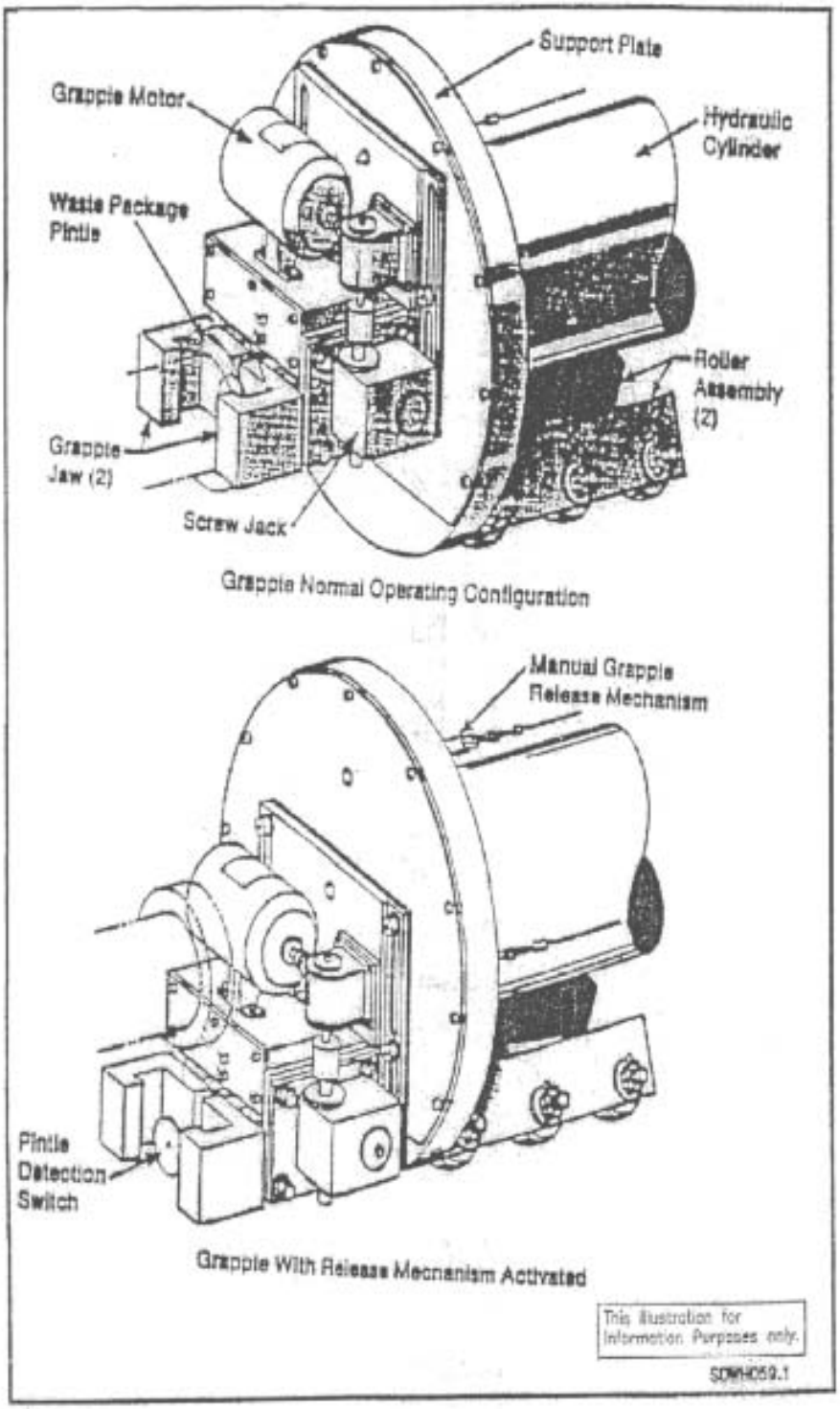

Figure WH II-I-43 – Grapple

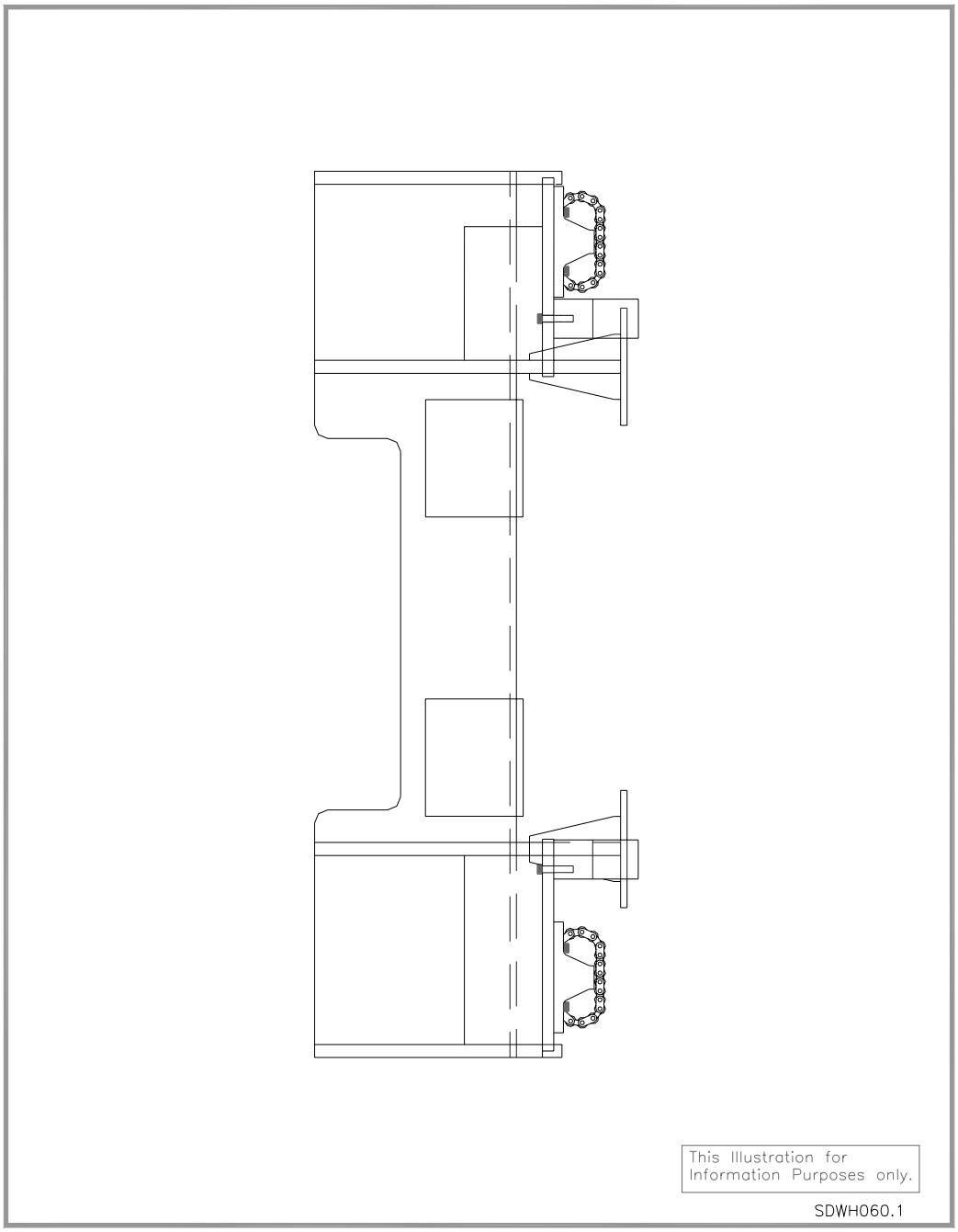

Figure WH II-I-44 – Shield Plug Carriage

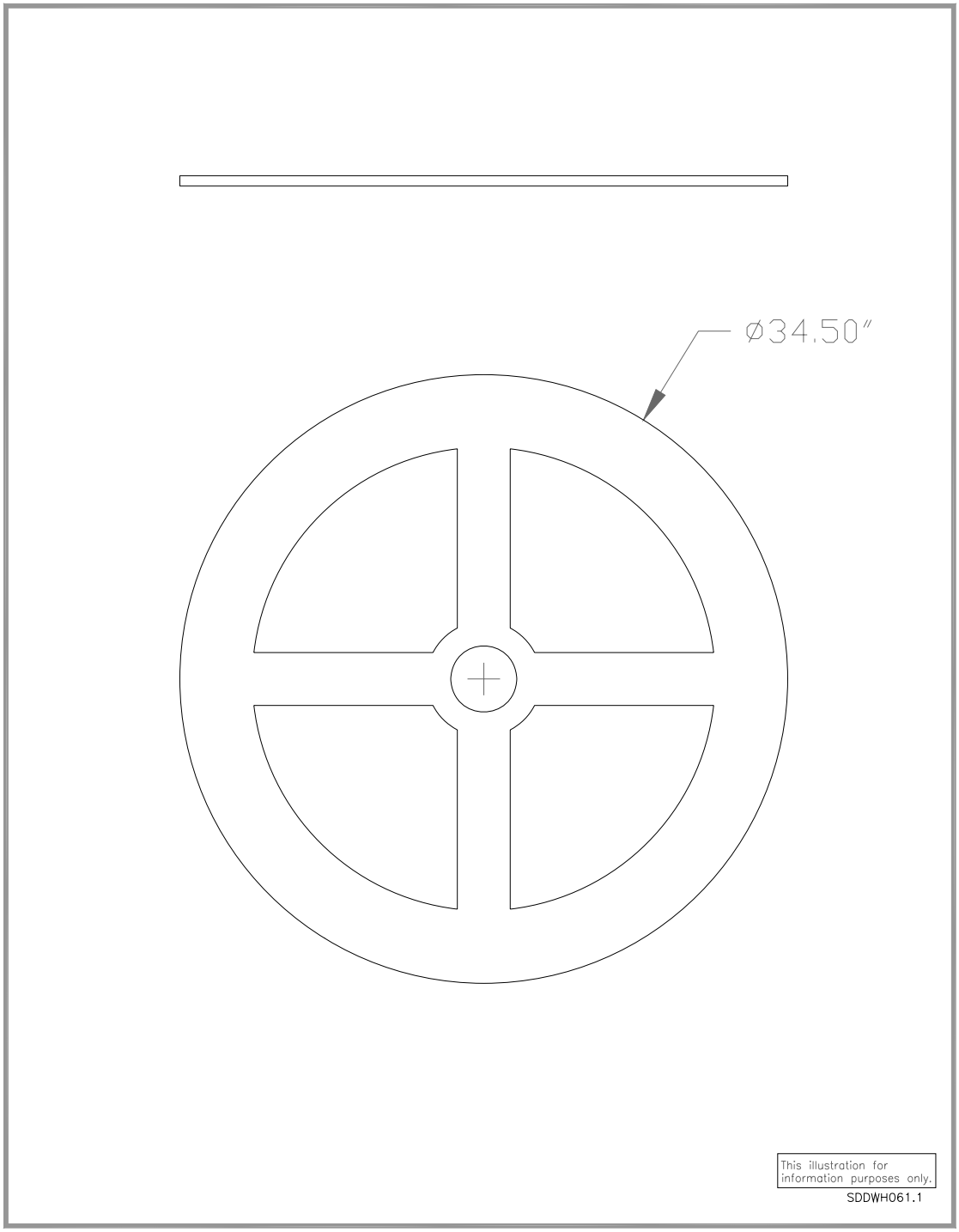

Figure WH II-I-45 – Steel Shielding Layer

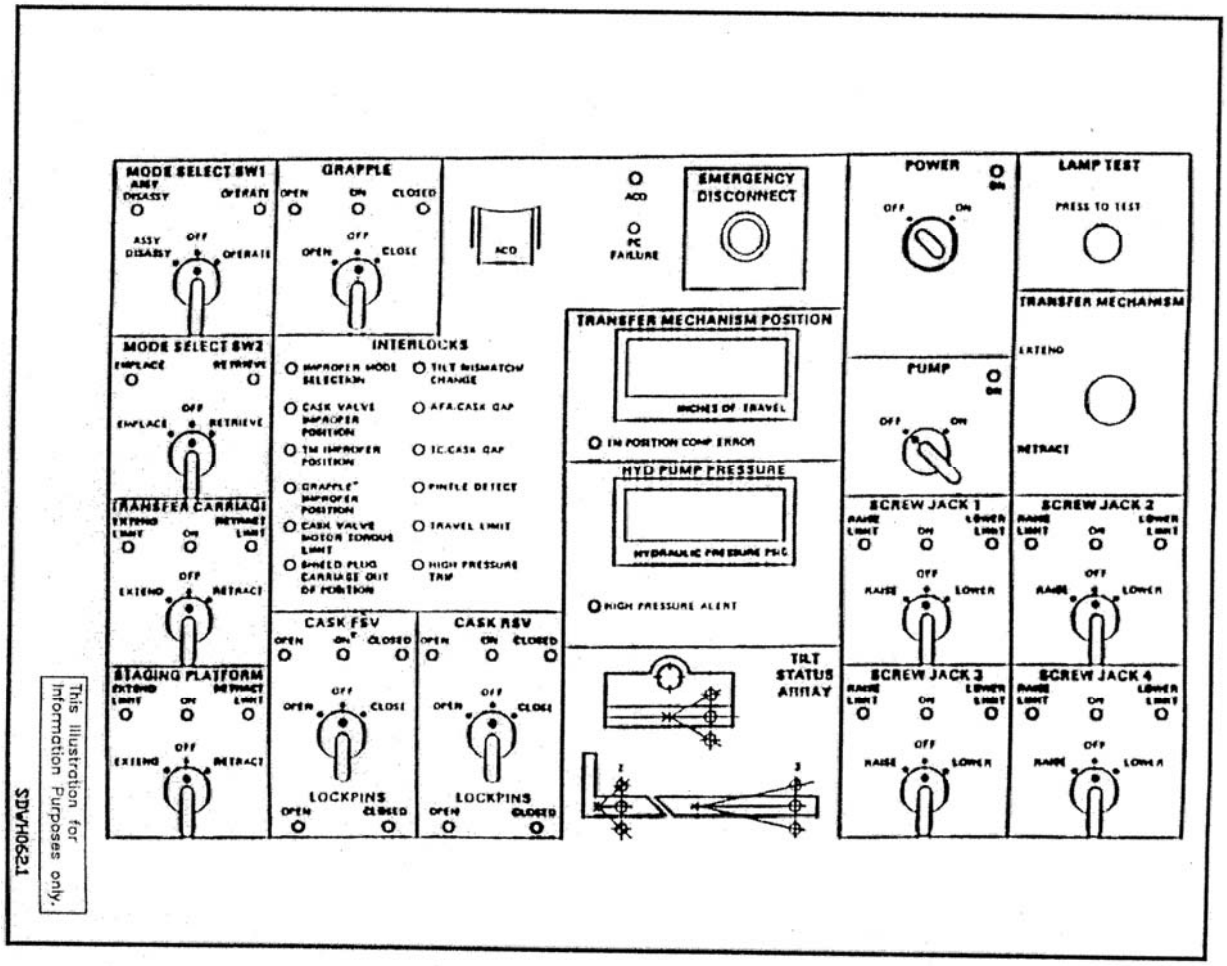

Figure WH II-I-46 – Control Console Panel Arrangement for the Waste Transfer Machine

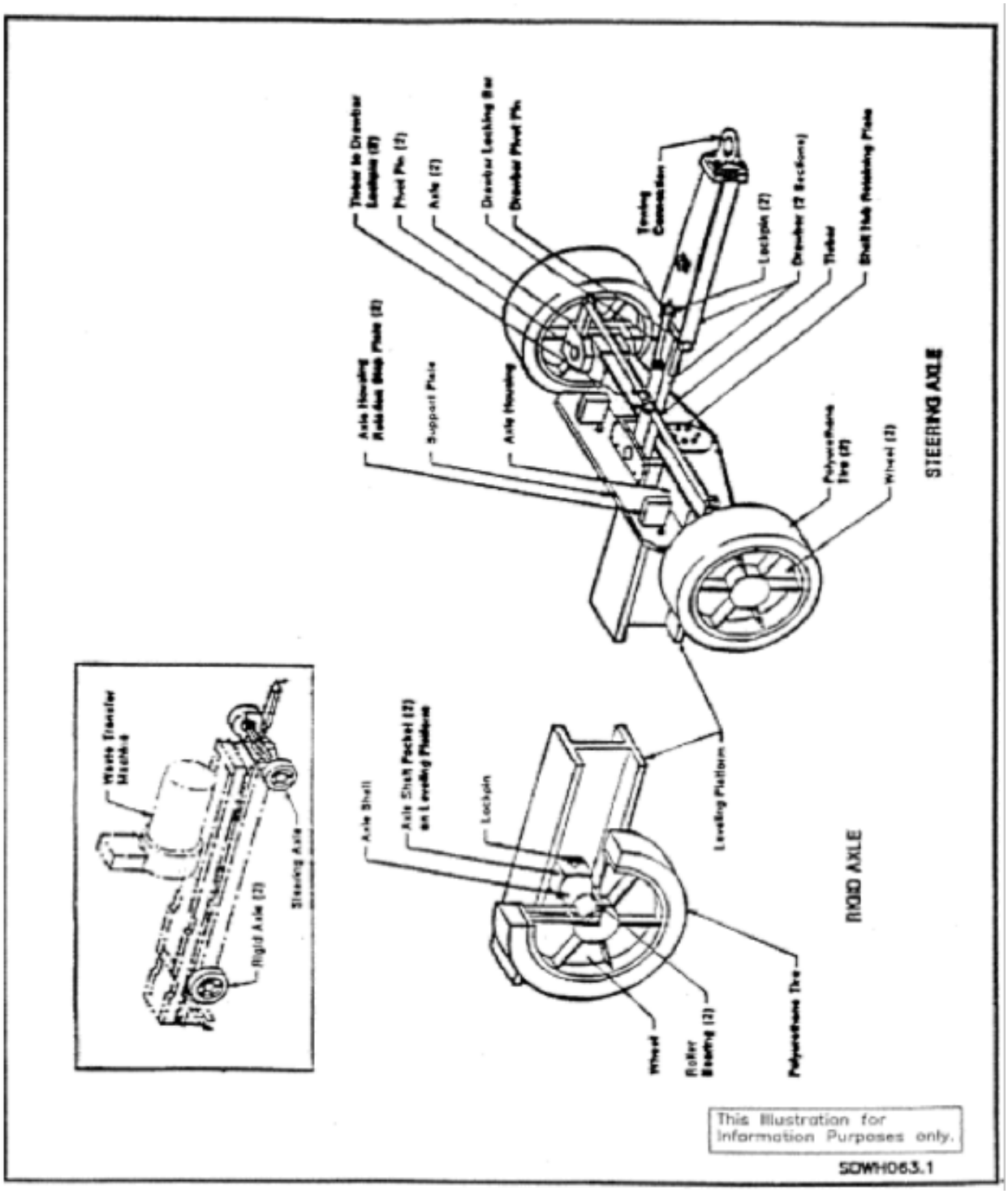

Figure WH II-I-47 – Transport Equipment

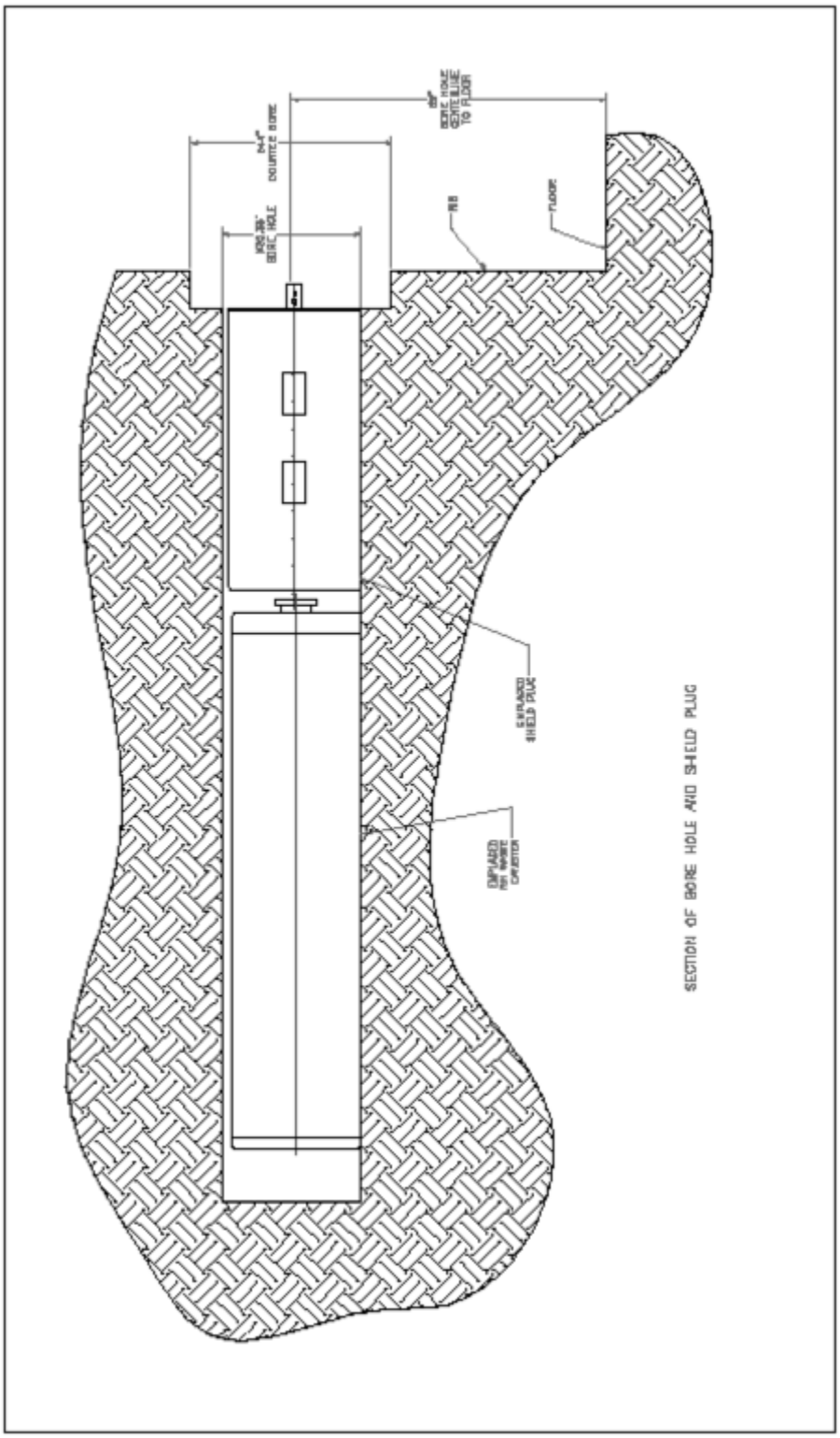

Figure WH II-I-48 – Waste Canister AND Shield Plug Installation

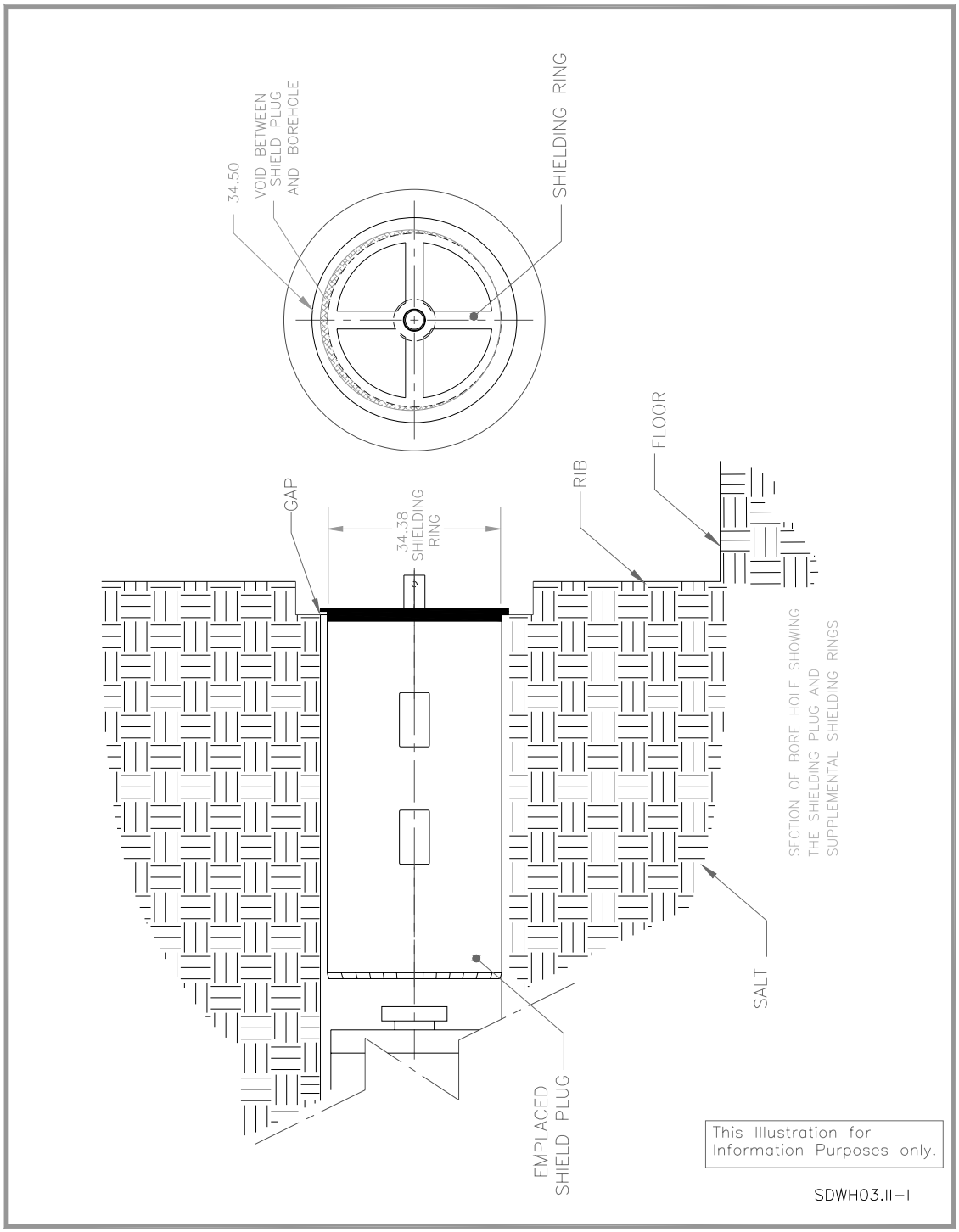

Figure WH II-I-49 – Shield Plug Supplemental Shielding Ring

Part II, Chapter II
Table of contents

Subsystem WH05, Hot Cell subsystem Requirements, Design, and Operation

1.0 PRIMARY FUNCTIONS 1
2.0 DESIGN REQUIREMENTS 1
2.1 General Design Requirements 1
2.2 System General Requirements 1
2.3 Operational Requirements 5
2.4 Structural Requirements 5
2.5 General Arrangements and Essential Features 5
2.6 Maintenance Requirements 5
2.7 Surveillance and In-Service Inspections 6
2.8 Instrumentation and Control Requirements 6
2.9 Interfacing System Requirements 7
2.10 Quality Assurance Requirements 7
2.11 Codes and Standards 7
2.12 Reliability Assurance Requirements 7
3.0 DESIGN DESCRIPTION 7
3.1 Summary 7
3.2 Detailed System Description 8
3.3 System Performance Characteristics 11
3.4 System Arrangement 11
3.5 Component Design Descriptions 11
3.6 Instrumentation and Control 37
3.7 System Interfaces WH05 41
4.0 OPERATION 42
5.0 SYSTEM LIMITATIONS, SET POINTS, AND PRECAUTIONS 43
5.1 Radiation Limits 43
5.2 Operating Limits 43
5.3 Set Points and Alarms 43
5.4 Interlocks 44
5.5 Precautions 44
6.0 OFF-NORMAL EVENTS AND RECOVERY 45
7.0 MAINTENANCE 45

List of Figures

Figure WH II-II-1 - Transfer Cell and Service Room 47
Figure WH II-II-2 - RH Facility Elev. 100' 48
Figure WH II-II-3 - RH Facility Elev. 123" 6\ 49
Figure WH II-II-4 - RH Facility Elev. 142' 1\ 50
Figure WH II-II-5 - Equipment Layout Hot Cell 51
Figure WH II-II-6 - 15-Ton Hot Cell Crane 52
Figure WH II-II-7 - Grapple Rotating Block 53
Figure WH II-II-8 - Hot Cell Hook and Flange 54
Figure WH II-II-9 - Flange Crane Hook Stand 55
Figure WH II-II-10 - Overhead Powered Manipulator 56
Figure WH II-II-11 - Parallel Jaw Hand/Hook Change Fixture 57
Figure WH II-II-12 - PAR Manipulator Maintenance Stand 58
Figure WH II-II-13 - Impact Tool and Fixture 59
Figure WH II-II-14 - Wrist Release Fixture 60
Figure WH II-II-15 - Small Shield Plug Removal Fixture 61
Figure WH II-II-16 - Large Shield Plug Removal Fixture 62
Figure WH II-II-17 - Shield Plug Removal Adapter 63
Figure WH II-II-18 - Crane Hoist and Trolley Override Drives 64
Figure WH II-II-19 - Transfer Drawer 65
Figure WH II-II-20 - Hot Cell Floor Shield Valve 66
Figure WH II-II-21 - Operating Gallery Equipment and Control Panels 67
Figure WH II-II-22 - Grapple Override Tool 68
Figure WH II-II-23 - Canister Shuttle Car 69
Figure WH II-II-24 - Transfer Cell Shield Valve and Actuator 70
Figure WH II-II-25 - 10-160B Road Cask Transfer Car 71
Figure WH II-II-26 - M/S Manipulator Repair Stand 72
Figure WH II-II-27 - M/S Manipulator Car 73
Figure WH II-II-28 - M/S Manipulator Gantry Crane 74
Figure WH II-II-29 - Portable Lift Dolly 75
Figure WH II-II-30 - Grapple Repair Cart 76
Figure WH II-II-31 - Crane Maintenance Room (Layout) 77
Figure WH II-II-32 - 10-160B Waste Handling Process 78
Figure WH II-II-33 - 10-160B Hot Cell Process Flow Diagram 79
Figure WH II-II-34 - CCTV Console Wall Mount 80
Figure WH II-II-35 - CCTV Console, Stand Up Control Point 81
Figure WH II-II-36 - Hot Cell Floor Arrangement 82
Figure WH II-II-37 - Swipe Robot 83
Figure WH II-II-38 - Detension Robot 84
Figure WH II-II-39 - Auto Acceptor Tube (AAT) 85
Figure WH II-II-40 - Detension Robot Nutrunner 86
Figure WH II-II-41 - Swipe Robot End-of-Arm Tool 87
Figure WH II-II-42 - Swipe Delivery System 88
Figure WH II-II-43 - Swipe Carrier 89
Figure WH II-II-44 - Master/Slave Manipulator 90

List of Tables

Table II-II-1 - I&C Equipment for WH05..... 37

Part II, Chapter II

Subsystem WH05, Hot Cell Subsystem Requirements, Design, and Operation

1.0 PRIMARY FUNCTIONS

Refer to Chapter G for the general primary functions.

2.0 DESIGN REQUIREMENTS

2.1 General Design Requirements

Refer to Chapter G for the general design requirements.

2.2 System General Requirements

The Hot Cell Complex includes the following rooms/cells which are provided by the Plant Buildings, Facilities, and Miscellaneous Equipment System (SDD CF00) and are used for processing RH TRU waste canisters:

- Cask Unloading Room
- Hot Cell
- Transfer Cell
- Manipulator Repair Room
- Crane Maintenance Room
- Hot Cell Operating Gallery

2.2.1 The Hot Cell Complex shall provide the capability:

- To handle RH TRU waste canisters and five-drum baskets. RH TRU waste canisters are up to 122 in. long, 28 in. in diameter, have a maximum weight of 10,000 lb, and have a maximum surface dose rate of 7,000 rem/hr.

- To accept road casks in the cask unloading room with the following maximum parameters:

  Length: 210 in.
  Diameter: 120 in. (includes all appurtenance)
  Weight: 110 tons

- To accept facility casks in the cask loading room with the following maximum parameters:

  Height: 168 in. (on the facility cask transfer car)
  Diameter: 39 in.

Weight: 40 tons (includes waste canister and facility cask transfer car)

2.2.2 The Hot Cell Complex (CF00) shall provide shielding to permit radiologically safe handling of waste canisters within the cask unloading room, hot cell, canister transfer cell, and cask loading room; and transfer of waste canisters between the rooms and cells.

2.2.3 Strategically placed shielded viewing windows shall be provided by system CF00 for viewing hot cell complex equipment operations.

2.2.4 The Cask Unloading Room (CF00) shall provide a shield door to isolate the room when unloading or loading a waste container from or into a road cask. An air-operated lift and cable cylinders shall be provided to assist in positioning the shield door and an air-operated door seal shall be provided (air provided by system CA00). In addition, an Area Radiation Monitoring System (ARM) interlock shall be provided by System RM00 to prevent opening the Cask Unloading Room shield door on a Hi-Level ARM signal.

2.2.5 The Hot Cell (CF00) shall include entry doors and a transfer drawer capability to remove tools, equipment, and to permit hands-on servicing, maintenance, and repair.

2.2.6 The Hot Cell (CF00) shall provide a floor port with two concentric shield plugs. These shield plugs shall permit (1) removal or insertion of RH TRU containers from road casks, and (2) removal or replacement of hot cell equipment.

2.2.7 Shield plug lift fixtures shall be provided for lifting the two Hot Cell concentric shield plugs.

2.2.8 The Electrical System (ED00) shall provide lighting for the Hot Cell Complex including lights in the Hot Cell and Transfer Cell for use with CCTV cameras.

2.2.9 A shuttle car shall be provided with the capability to position one 72B road cask loaded with a 72B RH canister or one shielded insert loaded with a facility canister. The shuttle car shall be rail mounted and self-propelled. The car shall be capable of accurately positioning the road cask or the shielded insert under any of the three shield valve ports (Cask Unloading Room, Hot Cell, Transfer Cell).

2.2.10 A shield valve shall be provided on the floor of the Hot Cell through which RH TRU waste canisters can be transferred from the Hot Cell into the canister shuttle car located in the Canister Transfer Cell.

2.2.11 A shield valve shall be provided in the ceiling of the Transfer Cell to transfer waste canisters from the shuttle car into the facility cask located in the Cask Loading Room.

2.2.12 System CF00 shall provide the following wells in the floor of the Hot Cell:

- Six wells to permit storing up to six RH TRU waste canisters
- One well at the overpack weld station (overpacking capability not currently available)
- Two wells at the radiological inspection station (one well can be used as a temporary storage well if needed)

2.2.13 An operating gallery, located outside the Hot Cell and provided by System CF00, shall be used to remotely operate and monitor the Hot Cell Complex equipment.

2.2.14 The following power and control panels shall be provided and located in the operating gallery:

- Bridge Crane power and control panels
- Overhead Powered Manipulator power and control panels
- Floor valve control panel
- Transfer drawer control panel
- CCTV control panels and auxiliary equipment
- Lighting control panels
- Hot cell grapples and grapple rotating block control panels
- Master slave manipulator power and control panels
- Hot Cell interlock/shield door permissive control panel

The Electrical System (ED00) shall provide the necessary electrical power for the above equipment.

2.2.15 Closed circuit television (CCTV) and cameras shall be provided for use in the Hot Cell and the Transfer Cell.

2.2.16 Master-slave manipulators, operated from the operating gallery shall be provided for performing tool handling, radiological surveying, waste canister overpacking and identification of canisters within the Hot Cell.

2.2.17 A 2-1/2-ton capacity bridge and trolley mounted powered telescopic manipulator (Overhead Powered manipulator) shall be provided. This powered manipulator shall be capable of reaching any part of the Hot Cell and shall be remotely controlled from the operating gallery.

2.2.18 The following Manipulator Repair Room equipment shall be provided to disassemble, repair, and reassemble manipulators:

- Manipulator repair stands
- Manipulator cart
- Manipulator tools

2.2.19 A 15-ton capacity Hot Cell bridge crane shall be provided to handle RH TRU waste containers and shield plugs. The Hot Cell crane shall be capable of being moved into an area (the Crane Maintenance Room of System CF00) that permits hands-on maintenance of the crane. The Hot Cell crane shall be provided with a grapple rotating block which is used to rotate the loads.

2.2.20 All special grapples, tools (including crane and grapple override tools), and grapple support fixtures needed to lift the waste canisters by their pintles and to operate and maintain the Hot Cell equipment shall be provided.

2.2.21 A crane bridge sweep winch shall be provided to move the 15-ton Hot Cell bridge crane into the Crane Maintenance Room if the bridge control is inoperative. A crane maintenance door winch shall also be provided to open and close the maintenance door which isolates the crane maintenance room from the Hot Cell.

2.2.22 A transfer drawer shall be provided at the radiological inspection station for transferring surface contamination assessment swipes, tools, and small equipment from the Hot Cell to the operating gallery outside the Hot Cell.

2.2.23 An industrial robot equipped with an electric wrench shall be provided in the transfer cell under the hot cell port to remotely loosen (detension) and back out the RH 72B road cask inner lid bolts.

2.2.24 An industrial robot equipped to handle contamination swipes shall be provided in the transfer cell under the cask loading room port to obtain samples of the surfaces of the RH 72B road cask lid and canisters.

2.2.25 A system shall be provided to transport contamination samples to the swipe robot and to return them to the service room for analysis.

2.2.26 A 25-ton capacity Cask Unloading Room bridge crane shall be provided to handle RH 72B road casks and shielded inserts. This crane shall be capable of transporting casks and inserts between the road cask transfer car in the center of the cask unloading room and the cask basket of the shuttle car in the transfer cell. The cask unloading room crane shall be provided with a non-rotating yoke designed to connect to the lifting lugs on the RH 72B road cask or shielded insert.

2.2.27 A shield valve shall be provided on the floor of the cask unloading room to allow transfer of RH 72B road casks or shielded inserts between the cask unloading room and the transfer cell. The shield valve shall provide shielding to allow access to the cask unloading room with an unshielded waste canister in the transfer cell.

2.3 Operational Requirements

Refer to Chapter G for the general operational requirements.

2.4 Structural Requirements

Refer to Chapter G for the general structural requirements.

2.4.1 The following WH05 equipment shall be designed to hold its load in place in the event of a design basis earthquake (DBE):

- 15-ton Hot Cell crane
- Shuttle car
- Overhead Powered Manipulator
- 25 Ton Cask Unloading Room Crane

2.4.2 Functional Classification

The functional classification for the SSCs identified in this system shall be performed and documented in accordance with WP 09-CN3023, Functional Classification procedure, and the functional classification section of the General Plant Design Description (GPDD). The process for establishing functional classification is contained in the DSA. Documentation of the Functional Classification analysis shall be in accordance with WIPP Configuration Management procedures.

2.5 General Arrangements and Essential Features

Refer to Chapter G for general arrangements and essential features.

2.6 Maintenance Requirements

Refer to Chapter G for the general maintenance requirements.

2.6.1 Maintenance on the 15-ton hot cell crane shall be performed in the crane maintenance room adjacent to the hot cell and shielded from any radiation source.

2.6.2 All hot cell equipment and tools shall be capable of being removed from the hot cell for maintenance when required. For large scale replacements, a roof hatch is provided.

2.7 Surveillance and In-Service Inspections

Refer to Chapter G for the general surveillance and in-service inspections.

2.8 Instrumentation and Control Requirements

Instrumentation and control equipment including operating stations and panels shall be provided to operate WH05 operating equipment. Specific requirements for Subsystem WH05 are:

2.8.1 A complete set of operating controls, indicators, and TV viewing monitors shall be provided for the Hot Cell operating gallery to enable an operator to operate and monitor all Hot Cell Complex operations.

2.8.2 The Hot Cell operating gallery instrumentation and control, and operating controls shall be designed to include the following requirements:

- A single failure shall not result in an unsafe operation.
- Making or breaking electrical connections shall not result in the condition of inadvertent operation of any mechanical device.
- Controls and interlocks shall be designed into the equipment to prevent unsafe operation and to protect personnel.
- Wiring shall be color coded and/or marked with identifying wire numbers.
- Cable connectors, if used, shall be provided with weatherproof locking type disconnects, connectors, or clamps.
- Fuses and/or circuit breakers shall be provided as required.
- Grounding shall be used to protect personnel and minimize electrical circuit interference.
- Position of the shield valves and shield plugs shall be shown by indicating devices.

2.8.3 Operator controls, indicators and remote viewing shall be provided for the hot cell to operate the following:

- Hot cell grapple
- 15-ton bridge crane
- Hot cell shield valve
- Grapple rotating block

- Overhead Powered Manipulator

2.9 Interfacing System Requirements

Refer to Chapter G for the primary and secondary interfacing requirements.

2.10 Quality Assurance Requirements

Refer to Chapter G for the program quality assurance requirements.

2.11 Codes and Standards

Refer to Chapter G for the codes and standards.

2.12 Reliability Assurance Requirements

Refer to Chapter G for General Reliability Assurance Requirements.

3.0 DESIGN DESCRIPTION

This section provides a detailed description of the Hot Cell Subsystem (Subsystem WH05) components, arrangements, performance characteristics, instrumentation and control, and system interfaces for satisfying the subsystem WH05 functional and design requirements.

3.1 Summary

The Hot Cell Complex provides the equipment to perform the following operations on RH TRU waste containers:

- Unload from shipping casks
- Survey and inspect
- Canisterize
- Transfer to the facility cask (WH03)

Specific pieces of equipment of the RH TRU waste handling system are credited with preventing or mitigating accidents analyzed in the Documented Safety analysis (DSA). The following RH TRU Waste Handling Equipment (WH05) is credited with specific Design Features within the DSA,

- Facility Canister **[TSR DF 6.8]**

3.2 Detailed System Description

Subsystem WH05 provides shielded rooms with tools, fixtures, and equipment to perform the following functions for handling and processing RH TRU waste canisters:

- Lift 10-160B five-drum baskets and cask lid into the Hot Cell.
- Open and close the shield door to the cask unloading room.
- Lift and replace hot cell floor port shield plugs to the cask unloading room.
- Transfer RH TRU 72B waste canister or the facility canister from the shuttle car into the hot cell.
- Survey surface of the waste containers for damage or unacceptable radioactivity.
- Open and close the hot cell floor shield valve to the transfer cell.
- Lower the RH TRU waste canisters into the shuttle car.
- Move transfer drawer for collecting assessment swipes and transferring small tools in and out of the hot cell.
- Routine maintenance of hot cell crane and manipulators.
- Canisterize 10-160B waste drums by placing them in facility canisters.

3.2.1 WH05 Hot Cell Subsystem

The purpose of the hot cell complex is to provide gamma shielding and required remote handling equipment for hot cell operation (i.e., cranes, manipulators, etc.).

Initially, RH TRU waste will be shipped to WIPP in either a 72B shielded road cask or a 10-160B shielded road cask. Inside the 72B cask is a single waste canister which holds up to three 55-gallon drums of RH TRU waste. The 10-160B road cask holds up to ten 55-gallon drums of RH TRU waste in two five-drum baskets. The RH TRU waste processes for handling the 10-160B payload within the Hot Cell is shown in Figure WH-II-II-34. The 72B waste handling process is described in SDD WH03.

Following shipping cask inspections after arrival at the WIPP site, the trailer carrying the shipping cask is moved into the RH Bay. The disposal

process begins in the RH Bay. The top impact limiter is removed from the shipping cask while on the trailer. The shipping cask is lifted from the trailer using the RH Bay overhead 140/25-ton bridge crane and placed on a road cask transfer car (RCTC). The car for the 10-160B cask is shown in Figure WH II-II-25. The cask is moved to a work area in the RH Bay where it is prepared for interior atmosphere contamination sampling, lid bolt detensioning and removal and lid lifting fixture attachment. The RCTC carrying the cask is then moved into the Cask Unloading Room.

The large shield door isolating the hot cell complex from the RH Bay is closed. Unloading the waste drums from the 10-160B cask requires use of the hot cell crane with visual contact via closed circuit TV. The 15 ton hot cell crane removes the shield plugs from the floor of the hot cell. The hot cell crane is next lowered to engage the 10-160B cask lid. The lid is lifted into the Hot Cell, surveys are performed and, when approved, the lid is set on the floor of the Hot Cell. Next the crane engages the pentapod and is lowered to retrieve the upper basket of five drums. The basket is raised into the hot cell, moved over to the inspection station for manifest verification and radiological control processes, and placed on the floor. During radiological control operations, master slave manipulators are used to take swipes of the exterior of the drums for radiological evaluation. The master/slave manipulators transfer the swipes to the hot cell transfer drawer to allow the swipes to be removed from the hot cell for evaluation. Once determined to be free of contamination, the basket is lowered to the floor. The process is repeated for the second basket. Empty baskets (spares) are lowered to the 10-160B cask and the shipping cask lid is lowered back onto the shipping cask. The hot cell shield plugs are re-installed. With the shield plugs in place, the hot cell is isolated from the rest of the facility and the canisterization process may now proceed. The 10-160B cask is returned to the RH Bay for preparations to return it to the generator site.

The facility canister is designed and constructed to transport three drums of RH waste from 10-160B shipping containers, from the upper Hot Cell to disposal borehole. The facility canister is a carbon-steel single-shell container and has an outside diameter of approximately 28 in., a wall thickness of approximately 0.25 in., and an overall length of approximately 121 in. The facility canister is loaded in the upper Hot Cell with three 55-gallon drums or three 30-gallon drums of RH waste before its id is attached.

The construction of the facility canisters provided an additional barrier that prevents or minimizes a release of the RH WASTE it contains when the facility canister is inside the facility cask. When contained inside the facility cask, a facility canister provides an additional barrier that prevents or minimizes the RH WASTE container's damage from drops, prevents direct flame impingement on the RH WASTE containers it contains, and minimizes a release from an internal deflagration. **[TSR DF 6.8]**

To canisterize the drums, one or two facility canisters are positioned in the inspection station at the northwest shielded viewing window of the hot cell. The lid of the canister is removed. The overhead powered manipulator or the 15-ton crane is used to transfer each drum from the basket to the canister in the inspection station. As the transfer takes place a canister list is generated to record the contents of each numbered facility canister. Up to three waste drums may be contained in each facility canister. The bridge mounted power manipulator and master/slave manipulators may be used to assist in the processing of the drums into the facility canister. The process is repeated until three drums are loaded. The canister lid is installed and secured.

The canister is now ready for transfer to the canister transfer cell. The hot cell crane with a facility grapple attached engages the pintle of the canister and lifts the canister clear of the inspection station. The canister is then either placed in the 6 position magazine at the east end of the Hot Cell, placed in the weld inspection station for storage, or positioned over the shield valve that covers a port between the upper Hot Cell and the Transfer Cell. The Transfer Cell shuttle car containing a shielded insert is positioned beneath the Hot Cell port. The shield valve covering the port is opened and the canister is lowered into the shielded insert. Once the canister is in the shuttle car, the crane is retracted into the Hot cell, the Hot CeII shield valve is closed. The canister is next positioned beneath the floor port connecting the Transfer Cell to the Cask Loading Room. The canister is loaded into the facility cask. The processes at this point are similar to that emplacing the canister from the 72-B cask.

All operations in the hot cell are performed remotely from operator controls located in the operating gallery outside the shielded windows of the hot cell. Closed-circuit TV monitors are provided for the operator to view operations in the hot cell and the transfer cell. Master/slave manual manipulators are used at the hot cell viewing windows to perform tool handling, radiological surveying, and other operations. A remotely operated bridge and trolley mounted telescopic manipulator is used to reach all areas of the hot cell. The 15-ton hot cell bridge crane includes rotating capability of the grapple to facilitate inspection and other operations by rotating the canisters. A transfer drawer permits transferring tools, parts, and contamination smears between the hot cell and the operating gallery.

Separate rooms are provided in the hot cell complex to repair and perform maintenance of the hot cell master/slave manipulators and 15-ton bridge crane. The manipulator repair room includes the necessary repair stands, carts, platform, and tools to disassemble, repair, and reassemble manipulators. The crane maintenance room is located so that its crane bridge sweep winch can pull the 15-ton bridge crane directly into the crane maintenance room on rail extensions if the bridge control is inoperative. A

crane door maintenance winch is used to open and close the maintenance door to isolate the crane maintenance room from the hot cell.

3.3 System Performance Characteristics

3.3.1 The WH05 subsystem shall provide equipment to allow the safe unloading of RH TRU shipping packages (RH 72B and 10-160B road casks) and the handling, surveying, inspection, and temporary storage of RH TRU waste containers. All operations shall maintain adequate shielding between operating personnel and the waste containers.

The design basis shielding requirement for the WH05 subsystem equipment is to maintain the dose rate at accessible equipment surfaces to less than 200 mrem/hr with a canister surface contact dose rate of 7,000 rem/hr.

The WH05 subsystem equipment shall have the capacity to handle, inspect and return the containers to the WH03 subsystem at a rate of one per 8-hour shift.

The hot cell is designed to accept cask payloads with an external contact dose rate up to 7,000 rem/hr.

3.4 System Arrangement

Refer to Section 3.4 of Part II, Chapter I, for the RH TRU waste hot cell system arrangement.

3.5 Component Design Descriptions

3.5.1 Hot Cell Complex Equipment

The hot cell complex is located in the RH side of the WHB. It consists of a series of rooms with thick concrete walls that provide shielding for the RH TRU waste canisters when they are not in a shielded transfer cask. The complex is located in the north side of the RH Bay of the WHB. See Figures WH-II-II-1 through WH II-II-4, WH05.

The hot cell complex equipment is listed and described below for each of the following areas:

- Hot cell
- ·Operating gallery
- Transfer cell
- Cask unloading room
- Manipulator repair room
- Crane maintenance room

3.5.1.1 Hot Cell Equipment

The permanent equipment installed in the hot cell is shown on Figure WH II-II-5.

3.5.1.1.1 Hot Cell 15-Ton Capacity Overhead Bridge Crane

The hot cell 15-ton capacity bridge crane is a remotely operated crane which operates on 60-pound rails at the 148-ft elevation of the hot cell. See Figure WH II-II-6.

The bridge has a 32-ft span and can travel about 96 ft in an east-west direction. It carries a trolley which can move 23 ft, 10 in. in the north-south direction. The trolley in turn carries a hoist which supports a grapple rotating block. A facility grapple can be attached to the rotating block to handle various loads within the hot cell. The facility grapple can also access a hook for lifting loads in the hot cell that are not equipped with a pintle.

One wheel on each side of the bridge is driven by a common shaft and actuator. A brake holds the bridge in position. There is an overriding beam on wheels at the east end of the hot cell that is used with cables attached to both ends of the beam to winch the bridge crane into the crane maintenance room if the crane can not be electrically driven. In this case, the bridge brake is released by contact with the overriding beam.

The bridge crane overriding beam can be used to move the crane to a position where the load can be released and then move the crane to the crane maintenance room where it can be serviced. Once the bridge crane is returned to service, the crane overriding beam is driven to the east end of the hot cell rails by the bridge crane to return it to its normal stored position.

The trolley has two driven wheels and has a geared motor and electric clutch that is powered independently of the crane control power and provides a backup means for positioning the trolley.

The hoist provides lift capability of 64 ft. The hoist drive can also be overridden using a geared DC motor and clutch that is powered independently of the crane control power and provides a backup means of raising or lowering the hoist load.

3.5.1.1.2 Grapple Rotating Block

The grapple rotating block is an assembly in a fabricated steel housing consisting of four sheaves at the top and a gear drive connected to a clevis at the bottom. See Figure WH II-II-7.

The grapple rotating block is suspended from the hot cell 15-ton bridge crane by cables passing through the sheaves.

The gear drive has a motor driven pinion that rotates the clevis yoke which normally supports the facility grapple. There is also a right angle gear reducer and auxiliary pinion gear which is used to manually drive the clevis with a special tool from specific locations in the hot cell.

The gear drive system includes the following:

- Motor ½ HP, 460 Volts, 3 Ph, 60 Hz, 1200 RPM
- Brake 3 ft-lb
- Clutch 150 ft-lb, 90 Volt DC

3.5.1.1.3 Facility Grapple

There are two hot cell facility grapples; one grapple is a spare.

The hot cell facility grapples are identical to the cask loading room facility grapples described in Section 3.5.2.5 in WH03.

3.5.1.1.4 Hot Cell Hook and Flange

A crane hook is available for use with the facility grapple. The hook is attached to a handling pintle with a flange. The flange is provided at the bottom of the pintle to support the hook in a special stand, the flange/crane hook stand, in the hot cell when the crane hook is not in use. The hook is rated at 15 tons and is shown in Figure WH II-II-8.

3.5.1.1.5 Flange/Crane Hook Stand

The hot cell flange/crane hook stand is a weldment that supports the hook when it is not in use. The stand measures 10 in. by 12 in. and is 12 in. high. It has a 3.5-in.-wide pocket for the hook that rests on the top of the stand. The hook pintle extends above the stand where it can be engaged by the facility grapple. See Figure WH II-II-9.

3.5.1.1.6 Overhead Powered Manipulator

The Model 6000 is an electromechanical manipulator with a 400 lb load capacity in its hand and a 5,000 lb capacity on its lifting hook at the shoulder. The arm is mounted at the end of a telescoping-tube hoist

extending down from a carriage which moves north and south on an overhead bridge. The bridge, in turn, moves east and west along runway rails fixed to the wall. The remote controlled arm has shoulder, elbow, and wrist pivots as shown in Figure WH II-II-10. The wrist can support various adapter tools, including a hook hand and parallel jaw hand. The hook hand can also hold an impact tool. The manipulator is suspended from a rotation drive assembly, which permits full rotation of the manipulator about its vertical axis. The manipulator is attached to the rotation drive by two locking pins. The design allows for remote removal of the manipulator from the rotation drive assembly.

The rotation drive is attached to the bottom of a telescoping tube which provides vertical motion for the manipulator. There are five square nested telescoping sections that are connected in such a way that movement of any one tube causes all tubes to move. The telescoping tube assembly is supported by the trolley carriage which travels on the bridge assembly. Both the bridge and trolley carriage have four drive wheels with gear motors and chain drives.

The power manipulator has the following capabilities:

Item	Capability
Bridge east-west travel	50 ft
Bridge speed	22 FPM
Trolley north-south travel	24 ft, 9 in.
Trolley speed	15 FPM
Telescoping tube up-down travel	15 ft-4 in.
Telescoping tube speed	15 FPM
Telescoping lift capacity	5000 lb (plus the weight of the manipulator)
Rotation drive speed	1 rpm
Rotation drive torque	7000 in.-lb at 1 rpm
Manipulator shoulder travel	210 deg
Manipulator shoulder speed	1 rpm
Rotation:	
Manipulator shoulder travel	Continuous
Manipulator shoulder torque	7000 in.-lb
Manipulator shoulder velocity	1 rpm
Manipulator elbow travel	240 deg
Manipulator elbow speed	1 rpm
Manipulator wrist travel	Continuous
Manipulator wrist speed	7 rpm
Manipulator wrist torque	720 in.-lb at 7 rpm
Manipulator wrist extension	6 in. at 20 ipm with a push/pull force of 400 lb
Manipulator wrist pivot	300 deg at 1 rpm
Manipulator jaw hand travel	0-8 in.
Manipulator jaw hand speed	16 ipm
Manipulator jaw hand force	500 lb
Manipulator hook hand travel	0-3 in.
Manipulator hook hand speed	6 ipm
Manipulator hook hand force	1500 lb

The following special fixtures and stands are provided to support the Overhead Powered Manipulator:

- One end effector fixture to support and allow picking up the alternate hands with the manipulator. The fixture is mounted on a steel frame that sits on the floor and is portable. See Figure WH II-II-11.

- One manipulator maintenance stand to support a manipulator. The stand provides space to set a manipulator when it is disconnected from the rotation drive. The maintenance stand is a fabricated steel structure mounted on wheels. See Figure WH II-II-12.

- One portable 3/4-in., motor-driven impact tool. The impact tool has an extendable electric cord with a connector plug that is held in a support fixture ready for use. The impact tool is picked up by the Overhead Powered Manipulator when it is used. A dust cover over the Overhead Powered Manipulator electrical female connector has to be first removed by the manipulator and set on the support fixture. The impact tool electrical plug is inserted into the overhead powered female connector and then the impact tool is picked up by the manipulator. See Figure WH II-II-13.

- One impact tool support fixture with a holder for the impact tool for storing the tool when not in use, a slotted set of plates for placing the electrical and dust cover plugs for pick-up by the overhead powered power manipulator and a slotted holder sockets for storing up to four different sizes of impact tools. See Figure WH II-II-13.

- Two manipulator wrist release fixtures for changing different types of manipulator end effectors. See Figure WH II-II-14.

3.5.1.1.7 Shield Plug Removal Fixtures

There are two shield plug removal fixtures in the hot cell. These two fixtures and a shield plug removal adapter are described in the following three sections:

3.5.1.1.7.1 Small Shield Plug Removal Fixture

The small shield plug removal fixture is used with the 15-ton bridge crane to remove the hot cell floor port inner shield plug (System CF00) to access the road cask in the cask unloading room and to remove the road cask inner lid to access the waste canister.

The small shield plug removal fixture shown in Figure WH II-II-15 resembles a tripod.

It is 9 ft tall with a handling pintle at the top and three fixture mover brackets that are engaged by a facility grapple. The legs are fabricated

from 3-in. schedule 40 pipe. Each leg has an engagement pin which can engage lifting lugs at a 13-in. radius on the hot cell floor inner shield plug removal adapter. A centering pin is provided near the bottom of the shield plug removal fixture to engage the shield plug removal adapter and align the fixture with the removal adapter. The fixture is lifted by the lifting pintle using the 15-ton bridge crane and the facility grapple. The fixture is rotated by the rotating block to allow the fixture to engage the shield plug removal adaptor lifting lugs. The small shield plug removal fixture weight is approximately 400 lb and has the capacity to lift 10,000 lb.

3.5.1.1.7.2 Large Shield Plug Removal Fixture

The large shield plug removal fixture is similar in design to the small shield plug removal fixture described above except that it is 11 ft tall and the engagement pins are at a 39-in. radius.

It is fabricated from 3-in. schedule 80 pipe to accommodate the greater weight of the outer shield plug in the hot cell floor connecting to the cask unloading room. The large shield plug removal fixture is shown in Figure WH II-II-16.

The large shield plug removal fixture weighs approximately 800 lb and has the capacity to lift 20,000 lb.

3.5.1.1.7.3 Shield Plug Removal Adapter

The shield plug removal adapter is a fabricated steel fixture, as shown in Figure WH II-II-17 that is attached to the small shield plug of the hot cell. It has three arms, each with a lifting lug that can be engaged by the small shield plug removal fixture. The center line of the lifting lugs are each on a 13-in. radius. The adapter has a height of 12-3/8 in.

The weight of the shield plug removal adapter is approximately 160 lb. The adapters lifting capacity is 10,000 lb.

The shield plug removal adapter is attached to the hot cell small shield plug with three bolts through holes in its base plate.

3.5.1.1.8 Master-Slave Manipulators

The hot cell is equipped with four master-slave heavy duty manipulators that allow the operator to reproduce, in the hot cell, the natural movements and forces of the human hand. The operator must exert the same force on the master arm that he wishes to exert with the slave arm; however, the tong squeeze motion does have a mechanical force multiplication. Each manipulator requires a 120-volt, single phase, 60-Hz power source for electrical indexing and filtered air pressure.

The manipulators are mounted in the wall of the hot cell using a "thru tube." The general arrangement of a manipulator showing the various motion extents available is shown in Figure WH II-II-45.

3.5.1.1.9 Transfer Drawer

A transfer drawer allows smear samples and small tools to be safely passed from the hot cell to the operating gallery. The general arrangement of the system is shown in Figure WH II-II-19.

A motor driven shield plug inside the hot cell blocks the 20-in.-square opening in the hot cell wall. The plug moves perpendicular to the wall on rollers that ride on tracks fastened to a steel frame. Movement is obtained by the motor driven ball screw actuator that allows a shield plug travel of 46 in. The plug has a square face gasket which seals against the hot cell wall when the plug is in the closed position.

On the operating gallery side of the shield wall opening perpendicular to the hot cell wall, there is a transfer drawer enclosure with viewing windows, two glove ports, and a transfer port. A motor driven shield plug in the floor of the transfer drawer enclosure blocks off the hot cell opening on the operating gallery side of the shield wall in the same manner as is done inside the hot cell. The shield plug travel in the transfer drawer enclosure is 38 in.

The motor driven ball screw actuators for the two shield plugs (hot cell and the transfer drawer enclosure) are electrically interlocked so that only one shield plug is in the open position at any time. The transfer drawer is moved in and out of the shield wall opening as the hot cell shield plug is moved by the motor driven ball screw actuator. A light screen machine guard system is installed inside the transfer drawer enclosure to prevent movement of the operating gallery shield plug while hands, gloves, or other obstructions are protruding through the transfer drawer enclosure glove ports or transfer canister port.

A sample tray is provided for transferring the assessment swipes between the operating gallery and the hot cell. The sample tray is placed on the far end (closest to hot cell) of the transfer drawer before the transfer drawer is manually moved into the shield wall opening. The transfer drawer must be completely inside the shield wall opening before the operating gallery shield plug is closed to block off the shield wall opening.

The transfer drawer is a flat, roller-mounted tray on the drawer carriage that rolls on rails on the floor of the opening in the hot cell shield wall. When the hot cell shield plug is closed and the operating gallery shield plug is retracted, the operator can pull the sample tray.

3.5.1.1.10 Hot Cell Floor Shield Valve

The hot cell floor shield valve is located in the hot cell above the port to the canister transfer cell. See Figure WH II-II-20.

The hot cell floor shield valve body is a plate 6-1/2 in. thick of carbon steel 68 in. wide and 67-1/2 in. long. It is supported on four rollers which ride on two floor-mounted flat tracks. Four guide rollers are mounted in the bottom of the shield and ride on the inside edges of the tracks to keep the shield in line. The shield is positioned by a motor-driven ball-screw actuator that is mounted above and behind the hot cell shield valve body such that the shield valve body rolls under the actuator as it moves from north to south to the open position. The motor-driven system includes a brake and a rotary limit switch assembly. The hot cell shield valve body weighs approximately 8,500 lb and the total weight of the complete assembly is approximately 10,000 lb.

3.5.1.1.11 Small Tool Storage Rack

The small tool storage rack is a set of three horizontal shelves that is located in the hot cell. The shelves are 4 ft long and fabricated from 18-gauge stainless steel. The bottom shelf is 20 in. deep and 2 in. off the floor; the middle shelf is 16 in. deep and 30 in. off the floor; the top shelf is 12 in. deep and 45 in. above the floor.

3.5.1.1.12 Hot Cell Tables

There are four stainless steel tables attached to the walls of the hot cell. These tables are 2 ft by 4 ft in size and are mounted 18 in. above the floor. Two are located along the north wall centered on the center lines of the inspection station and the welding station. The other two are placed side by side on the east wall.

3.5.1.1.13 Closed Circuit Television Cameras

There are seven mounted closed-circuit television (CCTV) cameras and two remote CCTV cameras in the hot cell. The upper hot cell contains six mounted and two remote cameras. The remaining camera is mounted in the lower hot cell.

Closed-circuit television camera systems are used in the hot cell areas to provide direct viewing of specific operations. Each camera system includes a camera head which is mounted inside the hot cell, a control unit which is located in the operating gallery, and connecting cable. The video output is directed to monitors that are located for operator convenience.

Each camera is approximately 8 in. wide by 8 in. long. Each camera has zoom capability of up to 12x.

Each camera is individually controlled by the main control unit located in the operating gallery. The control unit and monitors require a 120-volt, 1 phase, 60-Hz-power source.

The cameras are supported on a pan/tilt unit. The camera motion is achieved by activating small DC motors from the operating control located in the operating gallery.

The main control unit permits the TV signal to be relayed to up to three monitors. An interconnect is provided between the hot cell and the canister transfer system cameras. Video recording capabilities of the closed circuit television cameras and canister transfer system interconnected video signal is provided.

3.5.1.1.14 Vision Cameras

There are four vision system cameras within the transfer cell. These cameras are located in four positions around the transfer port between the transfer cell and the facility cask loading room. The cameras provide a 360 degree view of the canister as it is transferred into the Facility Cask.

3.5.1.2 Operating Gallery Equipment

The operating gallery area for the hot cell is shown in plan view in Figure WH II-II-22.

The operating gallery is located on the north side of the hot cell building extending from the east to the west walls of the hot cell at the second floor level and further extending along the west wall of the hot cell. There are a total of six viewing windows in the hot cell wall, four on the north side and two on the west side of the hot cell shield walls. The various equipment and control panels in the operating gallery are identified and shown on Figure WH II-II-22.

3.5.1.2.1 Scissors Lift Platform

The scissors lift platform is an elevator type lift. It is used to lift the manipulator cart from the operating gallery floor level to the manipulator repair room floor level which is approximately 4 ft above the operating gallery floor.

The scissors lift platform is electrically-hydraulically powered with an on-off operating control box on the end of an approximately 15-foot-long coil extension cord connected to the control panel. The control panel and hydraulic fluid tank sit on the operating gallery floor next to the scissor lift platform near the west wall of the operating gallery.

3.5.1.2.2 Transfer Drawer Enclosure

The transfer drawer enclosure is a floor-mounted box which contains the operating gallery shield plug and provides access to the hot cell transfer drawer. See Section 3.5.1.1.9 for description of the transfer drawer, interface with transfer drawer enclosure, and Figure WH II-II-19 showing the transfer drawer enclosure arrangement.

The transfer drawer enclosure has two viewing windows, two glove ports, and a transfer port for transferring swipe samples and tools from the hot cell to the operating gallery.

3.5.1.2.3 Transfer Drawer Control Panel

The transfer drawer operator control panel is wall mounted and located next to the transfer drawer enclosure in the operating gallery as shown on Figure WH II-II-22. It contains indicators and control switches to independently close and open the hot cell and the operating gallery shield plugs. See Section 3.5.1.1.9 for description of the Transfer Drawer shield plugs.

3.5.1.2.4 CCTV Monitoring and Control Panels

There are four CCTV stations in the operating gallery for selecting and monitoring the hot cell and transfer cell cameras. One CCTV station is located on a wall mounted swivel support to the left of the glove box viewing window. There are two portable units and the main console to provide additional viewing. A CCTV monitoring screen and operator controls are provided at all stations. The stations include controls and indicators for pan-tilt operation of the cameras.

The main camera control unit module, power supply, and supporting control boards to operate the CCTV system and perform video recording are contained in a main control unit. See Figure WH II-II-36.

3.5.1.2.5 Overhead Powered Manipulator Control Panel

The control panel for the hot cell overhead powered manipulator includes the control components for bridge, trolley, hoisting, and manipulator operation. The control equipment is mounted in floor mounted panels located along the north wall of the operating gallery. The operator controls and indicators are separately mounted on the overhead powered manipulator console. The console is mounted on wheels and can be moved near the viewing window to provide the best viewing of the operation to be performed. The console includes cables that can be plugged into any one of three out-of-cell connection boxes mounted on the hot cell outer shield wall in the operating gallery.

3.5.1.2.6 Hot Cell Shield Valve Control Panel

A control panel is provided with operator indicator and push-buttons for opening and closing the hot cell shield valve. See Figure WH II-II-22 for location of the panel.

3.5.1.2.7 Hot Cell 15-Ton Capacity Bridge Crane Control Panels

The 15-ton bridge crane control consists of the following:

- The bridge crane control panels housing the control circuit components for the bridge, trolley, and hoisting motions mounted along the north wall of the operating gallery.
- The grapple control consoles to operate the grapple and monitor the position of the crane.
- Three out-of-cell connection boxes mounted at three separate locations on the operating gallery side of the hot cell shield wall to which the portable pendant control can be connected.

The bridge crane operator controls are normally provided through Radio Frequency (RF) transmitters that contain levers, switches, and buttons to operate the crane. The transmitter control functions activate panel mounted hardware through an SLC-500 unit mounted in the panels. There are also panel mounted controls on the north wall of the operating gallery available to support operations. The panels contain two inverter drives for each of the bridge, trolley, and hoist functions to provide redundancy. A switch is provided to switch between the normal and alternate drives to enhance equipment availability. Crane position readouts and grapple controls are provided on panels located near the viewing windows. The hand held RF Transmitter allows the operator to select the optimum hot cell viewing window location to visually observe the crane operation. See Figure WH II-II-22.

A CCTV monitor and camera controls are available near the windows for visibility support to the operators. See Sections 3.5.1.1.14 and 3.5.1.2.4 for additional information on CCTV.

3.5.1.2.8 Crane Override System and Grapple Override Tools

There is one override tool for manually overriding the grapple electric drive of the hot cell 15-ton bridge crane and two geared DC motors, powered independently from the main crane control power, for overriding the crane hoist and trolley. These components are used alone or in combination when it is necessary to safely move, lower, or disengage a waste canister from the bridge crane grapple.

The grapple override tool in the Transfer Cell is designed to be pushed through the transfer cell shield wall to reach the override shaft on the grapple. Once engaged, the shaft can be rotated to release the canister from grapple.

The grapple override tool access is through a 7 inch inside diameter tube embedded in the 48 inch thick transfer cell shield wall (penetration F-02). The override tool is 2.250 inches in diameter with a hex head drive socket on the end for engaging the grapple override shaft. A handwheel is attached to the final extension rod for the operator to turn the override tool and shaft. The override tool is mounted in two eccentric blocks (see Figure WH II-II-23) that can be rotated at installation to provide proper alignment of the override tool.

The hoist and trolley override gear motors are mounted on the bridge crane trolley and attached to their respective gear reducer, high speed shafts. (See Figure WH II-II-18) The override shafts are isolated from the reducer shafts by an electric clutch, which requires power to engage. During off normal operation when the override is required, a DC voltage is applied to the clutches. The energized clutches engage the hoist and trolley overrides to their respective shafts. The hoist or trolley override motors are then energized in the desired direction. The motors provide the required torque to move the cranes rated load while overcoming the torque of the brake. This design provides a means of recovering if the brake solenoids were to fail.

Damage to the crane hoist and trolley drive system and/or the override motors and gears are protected by an interlock that prevents energizing the override components if the main crane control panel is energized.

3.5.1.2.9 Lighting Control Panels

Three wall-mounted lighting switch panels are provided for turning the individual hot cell complex lights on or off. Two panels are located at the east end of the operating gallery and a third is at the west end of the operating gallery. See Figure WH II-II-22 for location of the controls.

3.5.1.3 Transfer Cell Equipment

3.5.1.3.1 Shuttle Car

The shuttle car is a steel frame structure with a single opening (the cask basket) designed to accommodate a loaded RH 72B Road Cask. The car is used to position a cask at four locations: (1) under the Cask Unloading Room Floor Shield Valve (position W), (2) under the Hot Cell Shield Valve (position X), (3) under the Transfer Cell Shield Valve (Position Y1), and 72B road cask inner lid storage (Position Y2). A platform located on the car just west of the cask basket is used to store the inner vessel lid of the

RH 72B cask during canister transfer to the Facility Cask. The car is about 22 ft long, 10 ft deep and 6 ft wide. It is suspended from four steel wheels that ride on rails mounted on support trestles in the transfer cell. See Figure WH II-II-24.

A steel Shielded Insert duplicating the external handling dimensions of a RH 72B cask can also be loaded into the cask basket. This allows for the shielded transport of canisters with larger diameters than the RH 72B canister from under the Hot Cell port (position X) to under the Cask Loading Room port (position Y1).

Impact limiters are stop columns of sand (cylindrical containers) located under each cask/canister handling position. The impact limiters are designed to limit damage to the casks, shielded insert, canisters and the transfer cell floor in the event of an accidental drop of a cask or shielded insert by the Cask Unloading Room Crane or a drop of a canister by the facility hoist or hot cell crane. The impact limiters also help ensure the cask, shielded insert or canister remain upright after being dropped to aid in accident recovery.

The bottom support beams of the cask basket are connected to the shuttle car with shear bolts designed to break away, allowing the cask or shielded insert to fall through the bottom of the basket into the impact limiters. This prevents serious damage to the shuttle car structure and aids in accident recovery by maintaining the cask or shielded insert in a upright position.

The shuttle car is driven east and west by a chain drive system at the west end of the transfer cell. The double-chain sprockets are driven by a solid shaft which penetrates the canister transfer cell wall so that the gear reducer and drive motor are located outside the transfer cell. The reducer and drive motor are connected by a triple vee-belt. Belt tension can be adjusted by a turn buckle linkage mounted on the gear reducer. Proper tension in the chain drive is accomplished by two counter-weights which hang from the chains near the west end of the canister transfer cell.

Shuttle car position is sensed by an encoder on the chain drive shaft and controlled by the programmable logic controller (PLC) in the Cask Loading Room control panel (WH03). Four programmed stops serve the Cask Unloading Room port (position W), the Hot Cell port (position X), the Cask Loading Room port (position Y1), and the 72B cask lid storage position (position Y2). The PLC also controls the speed of the shuttle car through the variable speed drive to allow shifting from high speed to low speed as the programmed stop locations are approached. Three fixed CCTV cameras fitted with laser pointers provide visual backup of the proper positioning of the shuttle car.

The shuttle car has the following design and operating features:

Car speed range	0 to 31 FPM
Car total travel	47 ft -4 in.
Chain Sprocket Drive Motor	5 HP I 1800 RPM, 460 volt, 3 phase, 60 Hz Variable Speed Drive
Limit switches	2 -Over travel stops

3.5.1.3.2 Closed-Circuit Television Cameras

There are nine closed-circuit television cameras and four vision cameras in the Transfer Cell.

A detailed description of the camera systems is included in Sections 3.5.1.1.14 and 3.5.1.1.5. The cameras are monitored from the operating gallery (see Section 3.5.1.2.4) and the cask loading room operator control console described in Section 3.5.2.9, WH03.

3.5.1.3.3 Grapple Override Tool

The grapple override tool is inserted into a tube embedded in the 48 in. wall of the canister transfer cell to provide a manual override for the facility grapple. The grapple override tool is used to manually disengage the grapple from a canister after it has been lowered into the 72B cask or shielded insert.

The tool is similar in design and operation to those located in the 54 in. wall of the Hot Cell. See Section 3.5.1.2.8 for detailed description of the grapple override tool.

3.5.1.3.4 Transfer Cell Shield Valve and Actuator

The transfer cell shield valve and actuator are located in the ceiling of the transfer cell under the port connecting the transfer cell to the cask loading room. See Figure WH II-II-25.

The transfer cell shield valve is a nominally 12-in.-deep steel frame which supports a 42-in.-square steel plate that is 11 in. thick. The frame which is approximately 8 ft long is bolted to the ceiling of the canister transfer cell with the shield plate centered under the facility cask loading port. The shield plate has four recessed rollers which roll on the tracks attached to the inside of the steel frame. The valve travel is 42 in. from full-closed to the full-opened position.

The actuator is an electric motor-driven-screw linear actuator that is suspended from the ceiling and attached to the shield plate with a clevis pin.

The actuator has the following operating characteristics:

Speed	3 in./sec
Stroke	48 in. (maximum)
Running Thrust	1,250 lb
Breakaway Thrust	3,800 lb
Power Requirement	480-volt, 3-phase, 60-Hz
Limit Switch	Two overtravel switches built into actuator. Detension Robot

3.5.1.3.5 Detension Robot

The detension robot is an industrial robot typically used in manufacturing and material handling (see Figure WH II-II-39). Located in the transfer cell, it is equipped with an electric torque wrench for remotely loosening the eight RH 72B road cask inner lid bolts. The robot is mounted on a riser platform in the alcove adjacent to the hot cell port guide tubes (shuttle car position X). The six degree of freedom, floor mount style robot has a rated capacity of 286 lbs. The robot controller is mounted on the transfer cell floor near the base of the riser. The robot control panel is mounted on the wall at the entrance to the transfer cell where it is out of the radiation streaming paths when canisters are being handled at the hot cell port or the cask loading room port. A teach pendant is provided that allows telerobotic operation of the robot inside the transfer cell service rooms while viewing the robot on closed circuit television.

The torque wrench, which has been adapted as an end-of-arm tool, is an electronically controlled nutrunner commonly used in the manufacturing industry. The nutrunner is rated at 300 ft-lbs of torque and can be programmed to perform under a combination of several control modes including: torque, angle, yield, pre-torque, prevailing torque, backout, fault backout, and pre-threshold monitor. Torque and angle is monitored by the controller. The nutrunner control panel is mounted on the wall at the entrance to the transfer cell where it is out of the radiation streaming paths when canisters are being handled at the hot cell port or the cask loading room port.

The RH 72B road cask is prepared in the RH bay by removing the outer containment vessel lid and installing the inner vessel lid lift fixture and a lid alignment tool. The lid alignment tool performs the functions of: 1) locking the inner vessel to prevent rotation during lid bolt detensioning; 2) providing a lid bolt polar location reference to the detension robot; and 3) guiding the inner lid back into place during replacement by the grapple hoist. The road cask is positioned under the hot cell port (shuttle car position X) by the shuttle car. When the operator initiates detensioning from the CTS control panel, the detension robot then performs the following sequence of operations:

1) A laser sensor mounted on the robot arm may be optionally used to allow the robot to locate the center of the road cask inner vessel lid. This laser is currently deactivated;

2) When activated, the laser sensor may be optionally used to determine the polar displacement of the inner vessel lid bolt array;

3) The robot positions a vision sensor (high resolution television camera) near the calculated position of the first bolt to be detensioned;

4) A vision system computer, using input from the vision sensor, determines the actual position of the first bolt, calculates an offset, if any, and sends a correction to the robot controller;

5) The robot moves the nutrunner to the bolt location;

6) As the nutrunner is lowered onto the bolt head, the nutrunner turns slowly in the clockwise (tightening) direction while monitoring for torque to verify the bolt has been engaged;

7) The nutrunner then turns in the counter-clockwise direction while monitoring for excessive break-away torque and is simultaneously moved up by the robot to match the bolt movement;

8) After a predetermined number of turns (angle), the nutrunner stops, and the robot raises the nutrunner off the bolt;

9) Steps 3 through 8 are repeated for the remaining seven bolts;

10) The detension robot returns to the home position and signals completion to the CTS control panel.

An individual bolt can be accessed and detensioned separately by using the step mode of operation and skipping bolts until the desired bolt is reached.

The detension robot has the following specifications:

Payload	130 kg (286 lb)
Reach	2643 mm (104 in.
Repeatability	±0.3 mm (±0.0118 in.)
Mechanical Brakes	on all axes
Weight	1,300 kg (2,866 lb)

3.5.1.3.6 Swipe Robot

The swipe robot is a precision, high speed industrial robot used in manufacturing tasks such as assembly, material handling, and machine loading/unloading (see Figure WH II-II-38). It has six axes of motion with axis speeds up to 450 degrees per second. The robot is equipped with a specially designed End-Of-Arm Tool (EAOT) with two pneumatically operated three-jaw grippers. One gripper is oriented in-line with the robot wrist and the other is oriented perpendicular to it. The grippers are designed to grip WIPP swipe holders (see Figure WH II-II-42) from the inside. At the base of each gripper is a force sensor used to detect collisions and to monitor the force exerted on the swipe during sampling.

The swipe robot is programmed to obtain swipe samples from six locations which can be selected by the operator:

1) The underside of the cask inner lid when lifted free of the cask

2) The top of the canister pintle while inside the cask

3) The north side of the canister while being withdrawn from the cask

4) The east side of the canister while being withdrawn from the cask

5) The west side of the canister while being withdrawn from the cask

6) The bottom of the canister when lifted free of the cask.

While the canister side swipe polar locations are preprogrammed, the canister elevation can be adjusted by the operator to address any particular region of interest.

The following is an example of the sequence of actions to obtain a canister swipe sample:

1) Using control panel indications, the operator verifies the swipe robot is at home, a carrier is ready, the swipe delivery system is ready, and the radiation technician is ready to take a swipe;

2) The operator selects either north, east, or west on the swipe mode selector switch (west for this example);

3) Using manual control of the grapple hoist, the operator raises the canister to the desired height;

4) Pressing the "Initiate Swipe" pushbutton starts the swipe robot program;

5) The robot provides a swipe initiated indication on the CTS control panel;

6) The robot leaves the home position and inserts the gripper jaws of the in-line gripper into the waiting swipe holder;

7) The gripper jaws open to engage the swipe holder;

8) The robot inserts the swipe holder into a temporary holder mounted on the Auto Acceptor Tube (AAT) frame;

9) The swipe holder is released and picked up by the side mounted gripper (this allows the robot to access the west side of the canister);

10) The robot positions the swipe holder just above the surface of the canister;

11) The robot slowly moves radially in towards the center of the canister until the required force is sensed at the base of the gripper indicating contact;

12) The robot moves along a circumferential path, stopping at intervals to re-verify the force on the swipe and to recalculate its path until a total area of at least 100 cm^2 has been sampled.

13) The robot inserts the swipe holder into the temporary holder on the AAT frame;

14) The swipe holder is released by the side gripper and is picked up by the in-line gripper;

15) The robot returns the swipe holder to the carrier;

16) The robot returns to the home position and provides a swipe complete indication to the CTS control panel;

17) The swipe delivery system returns the sample to the service room and provides a swipe delivered indication on the CTS control panel.

The swipe robot has the following specifications:

Payload	16 kg (35.2 lb)
Reach	1605 mm (63.2 in.)
Repeatability	±0.08 mm (±0.003 in.)
Mechanical Brakes	on all axes
Weight	270 kg (594 lb)

3.5.1.3.7 Swipe Delivery System

The pneumatic 6-inch tube swipe delivery system (SDS) is designed to provide a dedicated material handling system for transporting contamination samples (swipes) between the service room and the auto acceptor tube (AAT) and back to the service room. A flow path diagram is shown in Figure WH II-II-43. The AAT is mounted on an elevated platform adjacent to the swipe robot riser. The send station is a vertical pneumatic terminal located in the service room. A receive only vertical terminal is located inside a vent hood in the service room. The send station can send pneumatic carriers to the AAT and the AAT can send carriers to the receive station; however, only one transaction can take place at one time. As shown in Figure WH II-II-43, the blower package, which provides the motivating force (vacuum) for carrier travel, is connected directly to the receive station. Air flow in the system is always from the service room (through the send station) to the transfer cell. The small amount of air that is trapped ahead of the carrier at the receive station is exhausted into the vent hood which directs the service room exhaust to the Waste Handling Building HEPA filtered exhaust system. Swipe Delivery System operation is controlled by a programmable logic controller (PLC) inside the AAT control panel located inside the transfer cell. The PLC receives operating inputs from and send outputs to the send and receive stations, the AAT, the swipe robot controller, and the CTS control panel in the cask loading room.

The blower package has two sets of motors and blowers in opposing configurations. Since the SDS only uses vacuum as a motive force, only the vacuum side motor is active. The pressure side has been disabled and serves as an installed spare.

To send a carrier to the carrier handler, the operator opens the send station door; places a carrier loaded with a swipe holder in the send station; closes the door; and presses the "Send" pushbutton. This starts the following sequence of actions:

1) The send and receive station doors are locked;

2) The blower turns on, pulling the carrier from the send station to the AAT;

3) When the carrier passes the AAT upper bypass junction, it is stopped by an air cushion provided by the closed upper AAT gate;

4) A sensor detects the carrier's arrival at the upper gate, and the blower is turned off;

5) The send and receive station doors are unlocked;

6) If this is the first carrier to arrive at the AAT, the upper gate is opened, and the carrier drops into the carrier handler;

7) The carrier handler rotates the carrier on its long axis until the carrier hinge is detected;

8) The carrier handler pivots down 90 degrees out of the pneumatic tube path and simultaneously releases the carrier latches and opens the carrier in a position accessible to the swipe robot;

9) Infra-red sensors determine if the swipe holder is present and in the correct location for access by the swipe robot;

10) A "Swipe System Ready" and a "Carrier Ready" signal is sent to the CTS control system to signal the system's readiness for swipe robot operation.

If the swipe holder is not detected in the correct location or the carrier does not open, the AAT will automatically return the carrier to the receive station as discussed below. Up to three carriers may be at the AAT at any one time, one in the carrier handler and two above the upper AAT gate. A sensor in the pneumatic tube above the AAT prevents sending a carrier if two are already present.

When the swipe robot has completed its sampling operation, it returns the swipe holder to the carrier. The carrier has a cylindrical receiver for the swipe holder (see Figure WH II-II-44). In the event the robot is unable to reinsert the swipe holder into the receiver, the robot will drop the holder into an empty section of the carrier. When the swipe robot returns to its home position, it initiates the following sequence of actions by sending a "Swipe Delivered" signal to the CTS PLC:

1) The carrier handler closes and latches the carrier as it simultaneously pivots up 90 degrees to align with the pneumatic tube path;

2) The send and receive station doors are locked;

3) The AAT bottom gate opens dropping the carrier into the tubing beyond the AAT bypass;

4) The blower starts, pulling the carrier from the AAT to the receive station (if another loaded carrier is in the send station, it will travel to the AAT upper gate);

5) When the carrier passes the receive station vacuum line junction, it is stopped by an air cushion provided by the closed receive station door;

6) A sensor detects the carrier's arrival at the receive station, and the blower is turned off;

7) The send and receive station doors are unlocked;

8) If another carrier is at the AAT upper gate, it will be prepared for access by the swipe robot as discussed above.

3.5.1.3.8 Alignment Fixture

The Canister Alignment Fixture is used to recover a canister from the facility cask after it has been removed from the road cask at the Cask Loading Room. The Alignment Fixture consist welded to a flat alignment plate. Slide rails interface with the alignment plate and are attached and aligned to the east side of the Transfer Cell Shield Valve's steel frame. This allows the alignment fixture to be slide in the position normally occupied by the shield valve when closed.

To recover a canister, the Transfer Cell Shield Valve must be in the open position. The Canister Alignment Fixture is moved west into place via use of the swipe robot and the canister is lowered back into the road cask through the tapered conical guide. After the grapple is hoisted out of the way, the Canister Alignment fixture is slid back to its standby location.

The Canister Alignment Fixture is used in conjunction with the swipe robot and the detension robot to complete a canister recovery. The swipe robot is used to position the Canister Alignment Fixture, the detension robot it used to tension the inner vessel lid bolts.

An alignment fixture is mounted to the transfer cell ceiling on two rails made from structural angle. The rails provide the ability to slide the alignment fixture in place between the transfer cell ceiling shield valve port and the 72B road cask or shielded insert, if needed. The alignment fixture is designed to assist with placing a 72B canister back into a road cask or placing a facility canister back into the shielded insert should conditions warrant.

3.5.1.4 Cask Unloading Room Equipment

The cask unloading room is a shielded room with a shield door. A set of rail tracks provide the means for the self-propelled road cask transfer car

(see Section 3.5.1.9, WH03) to move a road cask into the room for unloading a waste canister after the shield door is closed. A 25-ton crane is located in this room for moving the loaded/unloaded 72B Road Cask to and from the Transfer Cell. The crane is centered under the Hot Cell Shield Plug Port. See Figure WH II-I-1, WH03, for the location of the cask unloading room.

A square floor port connecting the cask unloading room to the transfer cell is located in the northwest corner of the room. A motor operated shield valve, similar to the hot cell shield valve described in Section 3.5.1.1.10, provides shielding for personnel in the cask unloading room from waste containers in the transfer cell.

3.5.1.4.1 25-Ton Cask Unloading Room Bridge Crane

The cask unloading room bridge crane is located near the ceiling of the cask unloading room at the 116 ft elevation and is supported by the room walls. The 25-ton capacity allows for the handling of the RH 72B road cask and the shielded insert. The crane hoist has two ropes wound in opposite directions on a common drum. The special non-rotating ropes are threaded through sets of sheaves on the hoist and the cask lifting yoke to provide a non-rotating, level lift for the cask.

The bridge has a 14 ft 3 in. span and can travel 9 feet in an east-west direction. The bridge operation on 100 pound A.R.E.A. type rails using double flange wheels. It carries a trolley which can move 8 ft. 4.5 in. in the north-south direction. The trolley in turn carries a hoist which supports a custom yoke.

One wheel on each side of the bridge is driven by a separate motor rated at 1.5 HP and 1,800 rpm. Fail safe brakes hold the bridge in position when power is not applied to the bridge drive motors. The motors have analog stepless drives that control the bridge speed between 0.5 and 50 ft per minute. A similar arrangement with two 3/4 HP, 1,200 rpm rated motors is used for the trolley with the trolley speed also controlled to speeds between 0.5 and 50 ft per minute.

The hoist provides a lift of 28 ft. The hoist motor is rated at 30 HP and 1,800 rpm. It has an analog stepless drive controlling the hoist yoke at speeds between 0.5 and 17 ft per minute.

3.5.1.4.2 Cask Unloading Room Floor Shield Valve

The cask unloading room floor shield valve is identical to the hot cell shield valve described in Section 3.5.1.1.10. The controls for the shield valve are located on the common control panel for the shield valve and the 25 ton bridge crane.

3.5.1.4.3 Cask Unloading Room Control Panel

A floor mounted control panel houses the control circuitry for the cask unloading room floor shield valve and the 25 ton bridge crane. The panel is mounted along the west wall of the room in full view of crane operations and the shield valve. The panel front includes control switches and equipment indicators for the shield valve crane. It also supports the CCTV monitor and controls.

3.5.1.5 Manipulator Repair Room Equipment

The manipulator repair room is located to the west of the hot cell with the floor level 4 ft above the floor of the operating gallery. The room has work benches set on top of storage drawer units along the south and west walls. The manipulator repair room is used to service master-slave manipulators.

3.5.1.5.1 Manipulator Repair Stands

There are two manipulator repair support stands in the manipulator repair room. The stands are made of welded 1-1/4-in.-diameter tubular steel with saddles at the top for supporting the through-tube of a master-slave manipulator. The stands are approximately 48 in. long, 36 in. wide, and 66 in. high. They have caster wheels to allow the stands to be moved about in the room. See Figure WH II-II-27.

3.5.1.5.2 Manipulator Cart

The manipulator cart is an aluminum stand on a set of wheels. See Figure WH II-II-28.

The cart has two saddle assemblies that can support a master-slave manipulator. Both saddles can be raised about 18 in. by hand pumped hydraulic cylinders. The front saddle can only move up or down. The rear saddle has rollers and tracks that permit it to move 6 in. laterally and 6 ft axially as well as up and down. All adjustments are manually performed. The manipulator cart has capabilities to handle loads up to 2,000 lbs.

The scissors lift platform (see Section 3.5.1.2.1) is used to raise the manipulator cart from the operating gallery floor level to the manipulator repair room floor level.

In addition to being used to handle master-slave manipulators in the hot cell operating gallery, the manipulator cart is used to move the manipulators from the operating gallery to the manipulator repair room.

3.5.1.5.3 Manipulator Room Gantry Crane

A 2-ton portable manipulator gantry crane is provided in the manipulator repair room. See Figure WH II-II-29. The crane is on wheels to allow it to be moved to any part of the room. Two A-frames support the load bearing cross beam.

The cross beam supports two chain fall hoists, each of 1-ton capacity. The crane is approximately 10 ft high with a beam length of 12 ft. The gantry crane is a general purpose lift for handling components and equipment. The two chain hoists can be electrically operated by plugging the connection cord of each hoist into a 120-volt, single-phase, 60-Hz power source connector. The hoist can be operated electrically by using the pendant up-down control or manually by using the chain fall chains.

3.5.1.5.4 Portable Lift Dolly

A portable lift dolly is provided in the manipulator repair room. See Figure WH II-II-30.

The portable lift dolly is a general purpose hand lifting mechanism on wheels with a fixed mast that is about 5 ft high and an extendable rigid boom that is used in the maintenance and repair of grapples. The boom is pinned to the mast and can be lifted to a horizontal position by a self-contained hydraulic cylinder and hand pump. The boom has a telescoping extension arm that is positioned by hand and then locked into position by inserting a removable pin. The lift capacity of the boom is 2,200 lb when the arm is retracted and 1,650 lbs. with the extension arm extended.

3.5.1.5.5 Manipulator Tools

Special tools required to service the master-slave manipulators are provided in the manipulator repair room. These are in storage units locked in the manipulator repair room.

3.5.1.5.6 Grapple Repair Cart

The grapple repair cart is a wheel mounted, welded steel support fixture with a standard pintle welded to the top. The overall configuration and dimensions are shown in Figure WH II-II-31. The cart is normally kept on the hot cell balcony. If the hot cell grapple requires maintenance, it is placed on the repair cart and latched to the standard pintle if possible. The grapple is then released from the rotating block. The cart with the grapple attached is moved out of the hot cell and into the manipulator repair room for servicing.

If the cart must be lifted to the balcony level, four eye-bolts are provided at the top of the cart for lifting. The weight of the cart is approximately

200 lbs. If the grapple has been latched to the pintle, the grapple and cart can be lifted by lifting the grapple.

3.5.1.6 Crane Maintenance Room Equipment

The crane maintenance room is located above the manipulator repair room and west of the hot cell. The crane maintenance room has a shield door through which the bridge crane can enter in order that maintenance may be performed in a radiologically shielded area. See Figure WH II-II-32, which shows the crane maintenance room arrangement and equipment.

3.5.1.6.1 Bridge Crane Sweep Winch

The bridge crane sweep winch is used to draw the hot cell 15-ton bridge crane into the crane maintenance room when the bridge cannot be operated normally. It accomplishes this by a cable type drive which is hooked onto the 15-ton bridge crane overriding beam (see Section 3.5.1.1.1) to pull and sweep the crane in the east to west direction into the crane maintenance room for maintenance service.

3.5.1.6.2 Crane Maintenance Shield Door Winch

The crane maintenance room shield door winch drives two cables through a series of sheaves and pulleys to raise and lower the top hinged shield door at the entrance to the crane maintenance room. The shield door winch hoist drive is located on the floor of the crane maintenance room against the west wall. The cable is double wound on the hoist drum and connected to the bottom of the shield door. When activated, the two cables swing the door up to the ceiling of the room to allow the crane to pass into the room for servicing. The winch is controlled from a control panel outside of the crane maintenance room.

3.5.1.7 Guide Tubes

A set of guide tubes is mounted in the path from the Hot Cell to the Transfer Cell. They are provided to support the transfer of a RH waste facility canister from the Hot Cell to the Transfer Cell. They can also accommodate a 72B canister.

3.6 Instrumentation and Control

This section describes the instrumentation and control (I&C), and control interlocks associated with the hot cell equipment. Table II-II-1 provides a list of the WH05 I&C equipment items. A brief discussion of each of the listed items follows:

Instrument	Range	Accuracy	Set Point
Manipulators	[----------See Vendor's Manuals----------}		

Table II-II-1 – I&C Equipment for WH05

Overhead Powered Manipulator – Crane
- Telescoping tube limit switch
- Manipulator shoulder limit switch
- Manipulator elbow limit switch
- Manipulator wrist limit switch
- Wrist torque limiter
- Wrist extension limit switch
- Trolley travel limit switch
- Crane travel limit switch

15-Ton Crane
- Hoist up limit switch
- 2 trolley travel limit switch
- 7 crane travel limit switches

Grapple Hoist
- 3 grapple jaw open limit switches
- 3 grapple jaw closed limit switches

Transfer Drawer
- Outer shield door closed proximity switch
- Inner shield door closed proximity switch

Hot Cell Floor Shield Valve
- Shield valve open limit switch
- Shield valve closed limit switch

Cask Unloading Room Floor Shield Valve
- Shield valve open limit switch
- Shield valve closed limit switch

Transfer Cell Equipment
- 2 shuttle car over travel proximity switches
- 2 ceiling-mounted shield valve travel limit switches
- 1 lock-out push button for ceiling shield valve

- 1 lock-out push button for telescoping port shield
- 1 shuttle car position transducer
- 1 shuttle car emergency stop pushbutton (in upper service room near motor)
- Detension Robot
- Swipe Robot
- Swipe delivery system Auto Acceptor Tube

Crane Maintenance Room Equipment
- Crane sweep stop limit switch
- 2 door stop limit switches

Operating Gallery Equipment
- 4 position lights on shield valve control panel
- 4 position lights on transfer drawer control panel

3.6.1 I&C for the Overhead Powered Manipulator

There are limit switches to control the positioning of the power manipulator to prevent exceeding mechanical stops. There are also torque and force measuring features to prevent exceeding design limits. See the vendor's manuals for range, accuracy and set points.

3.6.2 I&C for the 15-Ton Bridge Crane

There is a paddle limit switch actuated by the hoist that will prevent travel in the upward direction when it becomes actuated.

Trolley travel is limited by a limit switch mounted on each end of the bridge rails. The limit switches are actuated by a cam mounted on the trolley.

Crane travel is limited and controlled by seven limit switches mounted on the bridge and actuated by cams at various locations along the bridge rails. These limit switches prevent powering the crane bridge into its mechanical stops and positions the crane at known operating positions, such as above the waste canister storage positions, inspection station, hot cell shield valve, welding station, and shield plugs.

3.6.3 I&C for the Facility Grapple

There is a proximity switch associated with one of the grapple jaws to indicate that the jaws are open.

There is a proximity switch associated with one of the grapple jaws to indicate that the jaws are closed. There is a pintle contact proximity switch used to indicate a "no load" condition on the grapple to permit opening the jaws.

The above limit switches are used with the control circuitry to provide interlocks and operator information.

3.6.4 I&C for the Transfer Drawer

There is a proximity switch associated with the shield plug on each side of the drawer. These switches indicate when the shield plugs are closed and work with the control system to assure both shield plugs are not opened simultaneously.

3.6.5 I&C for the Hot Cell Shield Valve

There are two limit switches mounted on the floor of the hot cell associated with the shield valve. A cam mounted on the shield valve actuates the limit switches to indicate that the shield valve is open or closed. This signal is used in the control system as an indication to the operator and as an interlock function.

3.6.6 I&C for the Cask Unloading Room (CUR) Equipment

3.6.6.1 CUR Shield Valve

There are two limit switches mounted on the floor of the cask unloading room associated with the shield valve. A cam mounted on the shield valve actuates the limit switches to indicate that the shield valve is open or closed. This signal is used in the control system as an indication to the operator and as an interlock function.

3.6.6.2 CUR Shield door

The Hot Cell Interlock Control Panel in the operating gallery maintains an indicating feature related to the CUR shield door operation. A permissive request to open the CUR shield door is sent to the operating gallery from the CUR shield door operating panel. A permissive request light is illuminated indicating that a request has been made. An operator may acknowledge that permissive by depressing the light/button.

3.6.7 I&C for the Transfer Cell Equipment

Shuttle Car position is determined by a programmable limit switch (PLS) which receives its input signal from a resolver based transducer connected to the chain drive shaft. The PLS converts the resolver signal to the appropriate absolute binary position for use by its logic circuits. The PLS is programmed to provide outputs to determine the high and low speed regions of shuttle car operation and the stop positions at the Cask Unloading Room Port, the Hot Cell Port and the Cask Loading Room Port. Proximity switches located at the two extremes of shuttle travel sense

small metal bars mounted on the transfer car to provide over travel stop signals.

The transfer cell shield valve end of travel position is obtained from limit switches that detect the shield's open and closed positions. These signals are used as interlocks and as control aids for the operator.

There are three emergency stop push-button switches. Unless these switches are pulled out, the equipment that they affect will not operate. One switch is in the motor drive circuit for shuttle and is physically mounted on the wall next to the shuttle drive motor. The other two deactivate the transfer cell shield valve and the telescoping port shield; they are located in the transfer cell.

The detension and swipe robots have sensors and limit switches integral to the units that are not normally maintained by site personnel.

The detension robot has a laser sensor mounted on the end-of-arm-tool capable of detecting objects inside of programmable ranges. The sensor is used to locate the edges of the road cask, the inner lid lift fixture, and the inner lid alignment tool. A machine vision system is installed and may be used to determine the location of the inner lid bolts.

The swipe robot has force sensors mounted at the base of each gripper. These sensors are used for collision detection and to monitor the force being applied while obtaining swipe samples.

The swipe delivery system Auto Acceptor Tube (AAT) uses photoelectric sensors and actuator mounted limit switches installed to monitor and control its operation. AAT operation is controlled by a dedicated programmable logic controller. With the exception of the carrier rotating motor, all AAT motions are accomplished using pneumatic actuators.

3.6.8 I&C for the Crane Maintenance Room Equipment

The crane maintenance room has a limit switch that will stop the crane winch when the crane is in the maintenance room far enough so that the crane maintenance shield door can be closed.

The crane maintenance room has limit switches that will de-energize the door motor at the full extremes of the door travel. These limit switches are set so that the door will open and close completely without binding. The open limit switch is also used in the crane control circuit to prevent the crane from driving into a closed shield door.

3.6.9 I&C for the Operating Gallery Equipment

The hot cell shield valve and interlock control panel has five position indicating lights. One of the light indicates that the shield valve is fully open. One of the lights indicates that the shield valve is fully closed. The remaining indicator lights provide indication of conditions met for permissive to open the hot cell shield valve including:

1) Shuttle car is at position 'X' (under the hot cell shield valve).
2) Detension robot is home.
3) The Cask Unloading Room shield valve is closed.
4) The Transfer Cell shield valve is closed.
5) The hot cell crane is at position 'X' (over the hot cell shield valve).

When appropriate indicating lights are on, a permissive is enabled to allow the hot cell shield valve to open.

3.6.10 I & C for the Operating Gallery Equipment

The operating gallery transfer drawer control panel has two red/green light combinations. One combination indicates the status of the shield plug on the hot cell side (red = open, green = closed). The other combination indicates the status of the shield plug on the operating gallery side. In addition to status, the proximity switches that provide these indications prevent both shield plugs from being open simultaneously. A micro-screen sensor is present to detect protruding objects across transfer drawer glove port threshold to prevent personnel injury and equipment damage.

3.7 System Interfaces WH05

Listed below by subsystem is a summary of primary interface requirements for the WH05 system. Since WH05 does not provide services to any other system, there are no secondary interface requirements.

3.7.1 Primary Interfaces

The hot cell complex system requires service from the Compressed Air System CA00, the Plant Building, Facilities and Miscellaneous Equipment System CF00, the Central Monitoring System CM00, and the Electrical System ED00, Radiation Monitoring RM00, and Heating, Ventilation, and Air Conditioning HV00.

3.7.1.1 CA00

- Provide the compressed air to operate the swipe delivery system auto acceptor tube.

- Provide the compressed air to operate the swipe robot grippers.

- Provide compressed air for CUR shield door operation (CF02)

3.7.1.2 CF00

- Provide the crane supports for the 15-ton crane in the hot cell.
- Provide the hot cell and shielding penetrations.
- Provide the canister transfer cell and shielding penetrations.
- Provide the manipulator repair room and shielding penetrations.
- Provide the crane maintenance room and shielding penetrations.
- Provide the hot cell operating gallery and shielding penetrations.

3.7.1.3 CM00

Provide remote alarm and display status of the hot cell shield valve and the transfer cell shield valve.

3.7.1.4 ED00

- Provide lighting in the hot cell complex.
- Provide power to operate and control the canister shuttle car.
- Provide power to operate the hot cell shield valve.
- Provide power to the operating gallery panels.
- Provide power to the manipulator crane.
- Provide power to the 15-ton hot cell crane.
- Provide power to the Overhead Powered Manipulator.
- Provide power to the crane bridge sweep and door winches.
- Provide power to the transfer drawer.
- Provide power to operate the transfer cell shield valve.
- Provide power to the detension robot in the transfer cell.
- Provide power to the swipe robot in the transfer cell.
- Provide power to the swipe delivery system in the service room.

3.7.2 Secondary Interfaces

3.7.2.1 CM00

- Provide monitoring for CUR shield door position.
- Provide monitoring for CUR ARM status

4.0 OPERATION

Waste handling site operation involves the receipt and handling of 72B and 10-160B shipping casks canisterization of 10-160B waste drums,

handling of waste canisters, and emplacement of RH TRU waste canisters at the WIPP site. The equipment and facilities of subsystems WH03 and WH05 are utilized to support this RH TRU activity. The site operation requires the integration of equipment from various subsystems. The sequence of operations that must be performed for the receipt, handling, canisterization emplacement and/or retrieval of RH TRU waste at the WIPP site are conducted in accordance with WIPP site controlled operating procedures.

5.0 SYSTEM LIMITATIONS, SET POINTS, AND PRECAUTIONS

This section describes the operating limits, set points, alarms, interlocks, and precautions as related to operation of the waste handling system. Consideration is given to general personnel safety, equipment safety and performance, and overall system performance. The information reiterates the limits, set points, and precautions imposed either implicitly or explicitly by the system operations described in Sections 4.0, 6.0 and 7.0.

5.1 Radiation Limits

RH TRU waste canisters delivered to the WIPP site shall have a maximum external surface dose rate of 1000 rem/hr.

5.2 Operating Limits

The shuttle car is capable of accommodating an RH TRU 72B Road Cask with canister or one shielded insert with canister.

.

The hot cell and the transfer cell shall be maintained at a negative pressure differential with respect to the RH receiving Bay when the hot cell is in use. If the required hot cell or transfer cell to RH Bay pressure differential established by system HV00 is not provided or is lost, the hot cell or transfer cell waste handling operations should be suspended pending reestablishment of the hot cell differential pressure.

The Overhead Powered Manipulator may travel west of the crane only when the crane high-high limit is engaged and the facility grapple is open and does not detect a pintle.

No more than twelve RH waste drum equivalents are permitted in the hot cell (Room 124) at any time.

The hot cell 15-ton bridge crane sweep winch can only move the bridge from east to west to the crane maintenance room.

5.3 Set Points and Alarms

None

5.4 Interlocks

The hot cell shield valve is interlocked with the detension robot, the transfer cell shield valve, the 15-ton bridge crane, the cask Unloading Room shield valve, and the shuttle car. The hot cell shield valve cannot be closed with the crane hoist below a preset high position residing in the programmable logic controller. The hot cell shield valve cannot be opened unless the cask basket of the shuttle car is under the hot cell port (position X) and the 15-ton bridge crane is over the hot cell port (position X) and the detension robot is at home and the transfer cell shield valve is closed and the cask unloading room shield valve is closed.

The hot cell transfer drawer operating gallery side shield plug control is interlocked with a light screen machine guard system. The shield plug will not move when any obstruction is sensed inside of the glove box through the glove or transfer canister ports.

The hot cell crane facility grapple is interlocked with the cask unloading room shield door (CF02), and the hot cell shield plugs. The shield door cannot be opened unless the shield plugs are installed. The grapple cannot be raised over the hot cell shield plug removal position unless the shield door is closed and a permissive to open the shield door is not present.

The cask unloading room shield door is interlocked with the cask unloading room area radiation monitor. The shield door will not unseal and lift (air bearing air applied) if the detectable radiation in the CUR is above a preset limit detected through an area radiation monitor or if the shield plug in the hot cell is removed.

CTS interlocks are described in WH03, Section 5.4.1.

Interlocking of shield doors for the cask unloading and loading rooms is provided by system CF00.

The hot cell crane hoist and trolley override system cannot be operated if the normal crane control panel is energized.

5.5 Precautions

Areas of the Hot Cell, including the cask unloading room, transfer cell, crane maintenance room, and upper and lower levels of the Hot Cell, shall be posted in accordance with Radiological Control Position Paper 01-08.

The cask unloading room shield door is electromechanically operated and should be opened or closed only with direct visual access to the shield door travel area.

Depth perception is affected when viewing operations through the shielded windows of the hot cell. Use sufficient means (other windows, CCTV) when operating equipment in the hot cell.

The CCTV cameras extend from the hot cell walls. Caution should be used when approaching the walls with the 15-ton bridge crane and Overhead Powered Manipulator to avoid damaging the cameras or mounts.

Keep the normal canister path from the shield plug port to the canister inspection and overpack welding station clear of hot cell miscellaneous equipment. Avoid allowing a hot cell bridge crane load to swing.

The transfer cell contains remotely operated equipment that could cause personnel injury, specifically the shuttle car, swipe robot, detension robot, swipe delivery system, and transfer cell shield valve. All but the shuttle car are at elevations normally not accessible to personnel on the floor of the transfer cell. During operation, access to the transfer cell is administratively prevented. A light screen is located at the entrance to the Transfer Cell and is interlocked with the swipe robot, detension robot, and shuttle car. When the transfer cell is open, precautions must be taken to ensure there are no unplanned movements when work must be performed on or around the equipment including equipment lockout/tagout.

6.0 OFF-NORMAL EVENTS AND RECOVERY

Refer to Section 6.0 of Chapter G for the off-normal events and recovery scenarios which are applicable to RH TRU waste hot cell subsystem operations.

7.0 MAINTENANCE

Refer to Section 7.0 of Chapter G for the maintenance requirements and approach related to waste handling subsystems.

WIPP operations, controlled corrective maintenance, preventative maintenance, and in-service inspection procedures apply to the following subsystem WH05 hot cell equipment.

- 15-Ton bridge crane
- Grapple rotating block
- Overhead powered manipulator
- Master-slave manipulators
- Transfer drawer
- Hot cell shield valve
- Closed circuit television system

- Shield plug removal fixtures and adapter
- Small tool storage rack
- Hot cell tools
- Hot cell tables
- Operating gallery
- Scissors lift platform
- Transfer drawer enclosure
- Crane hoist and trolley override system
- Grapple override tool
- Shuttle car
- Transfer cell shield valve and actuator
- Manipulator repair stands and cart
- Grapple repair cart
- Mobile scissor lift platform
- Manipulator room gantry crane
- Crane maintenance room equipment
- Detension Robot
- Swipe Robot
- Swipe Delivery System
- Control Panel for CUR Shield door
- Control Panel for Hot Cell Interlocks

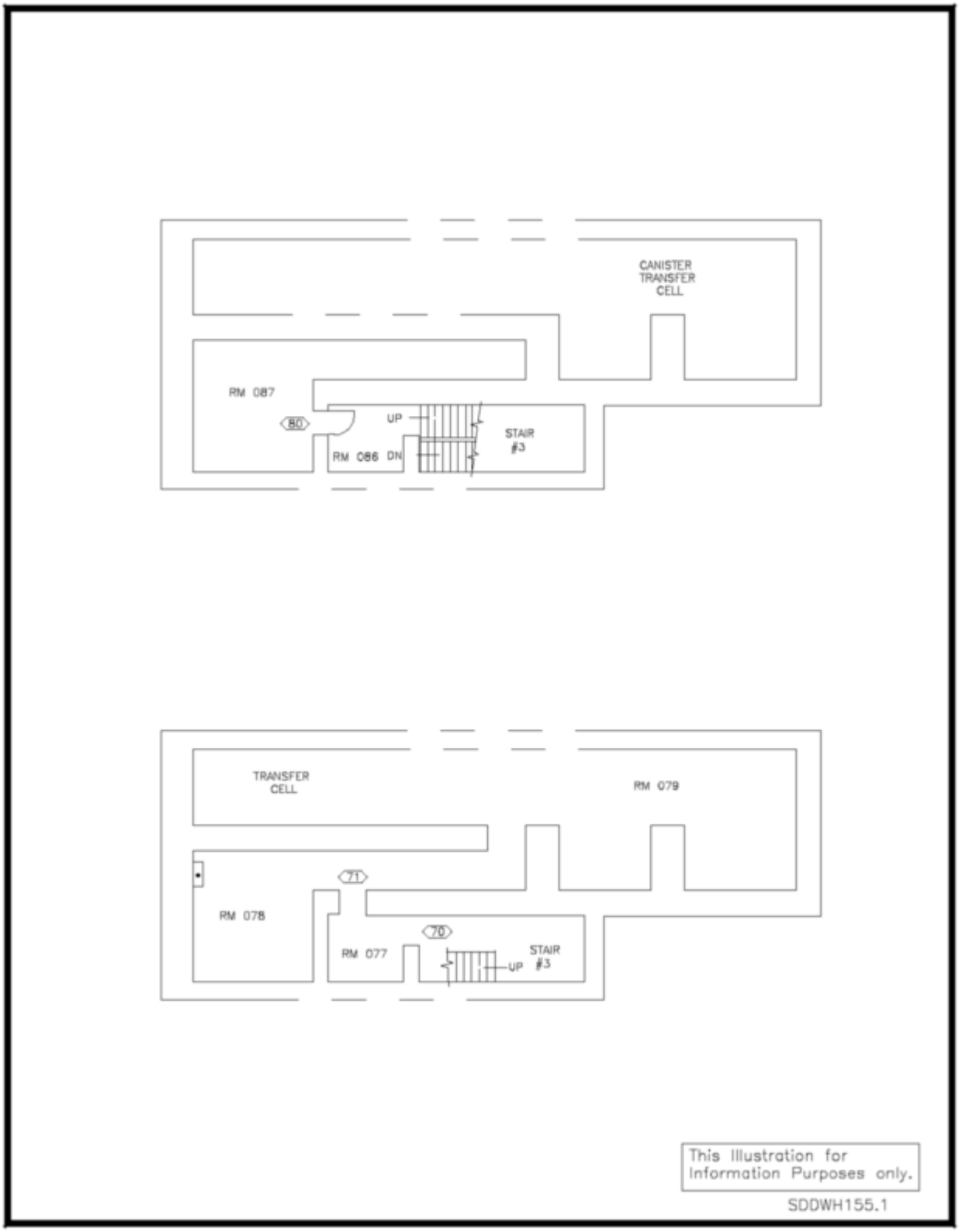

Figure WH II-II-1 – Transfer Cell and Service Room

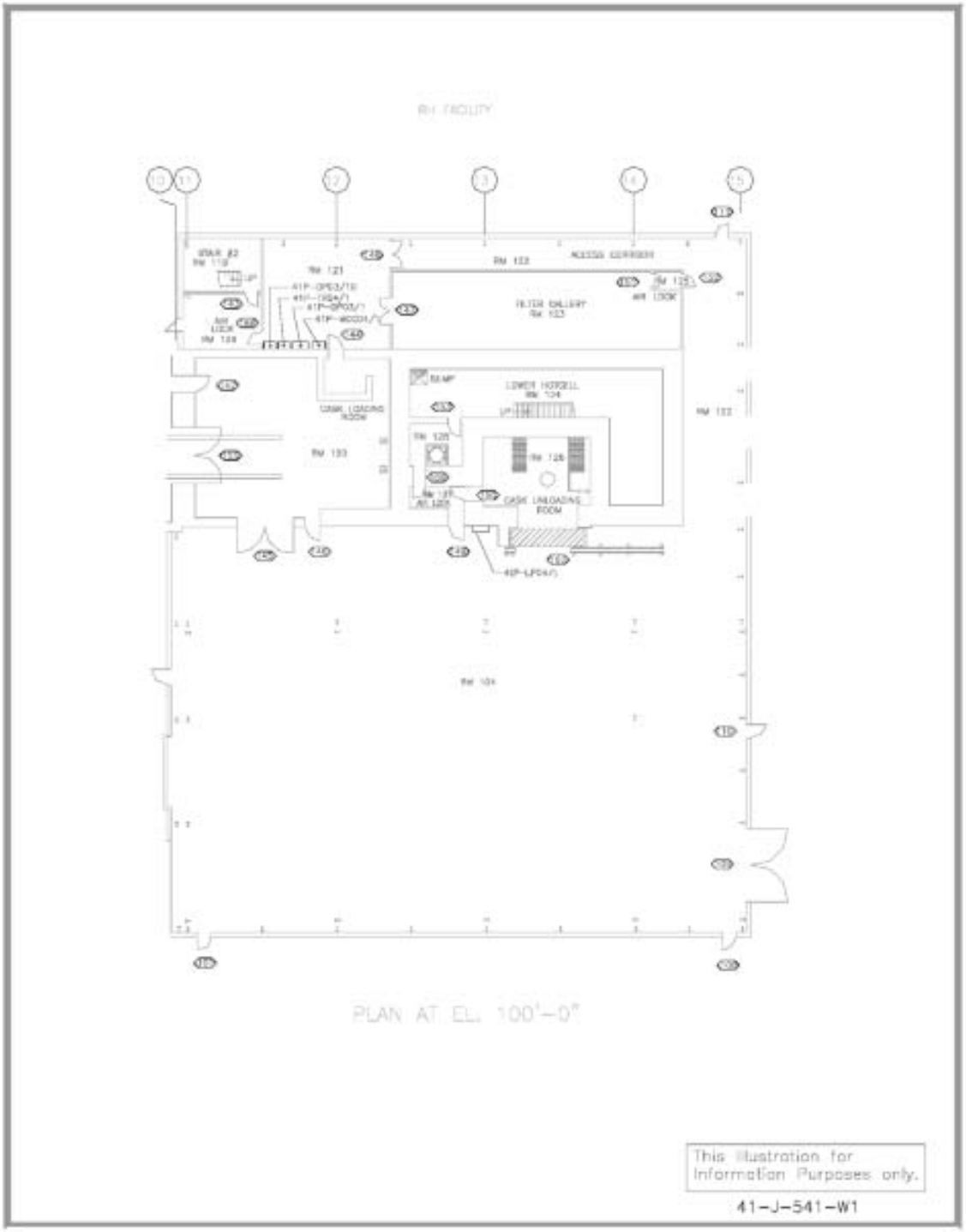

Figure WH II-II-2 – RH Facility Elev. 100'

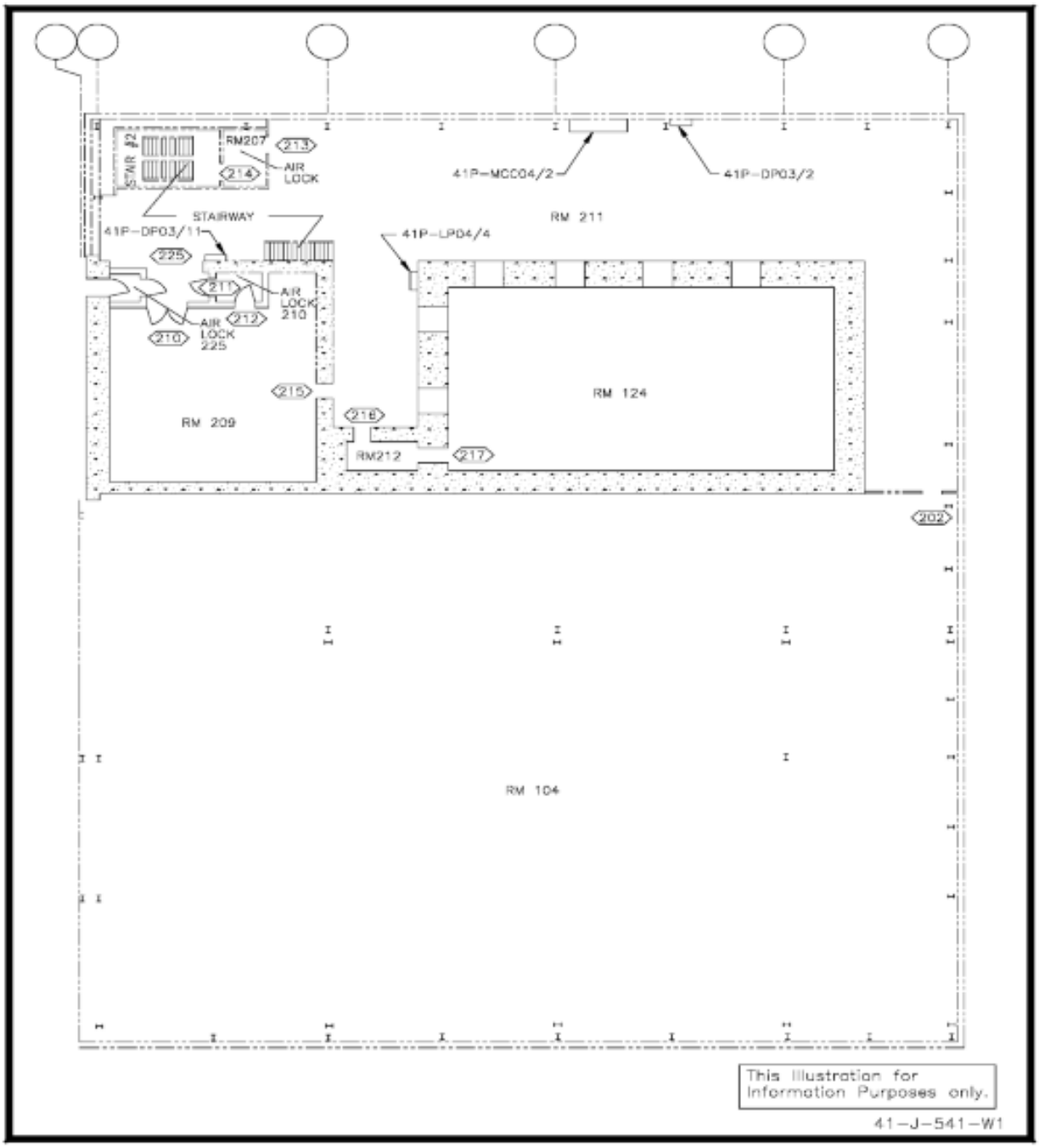

Figure WH II-II-3 – RH Facility Elev. 123' 6"

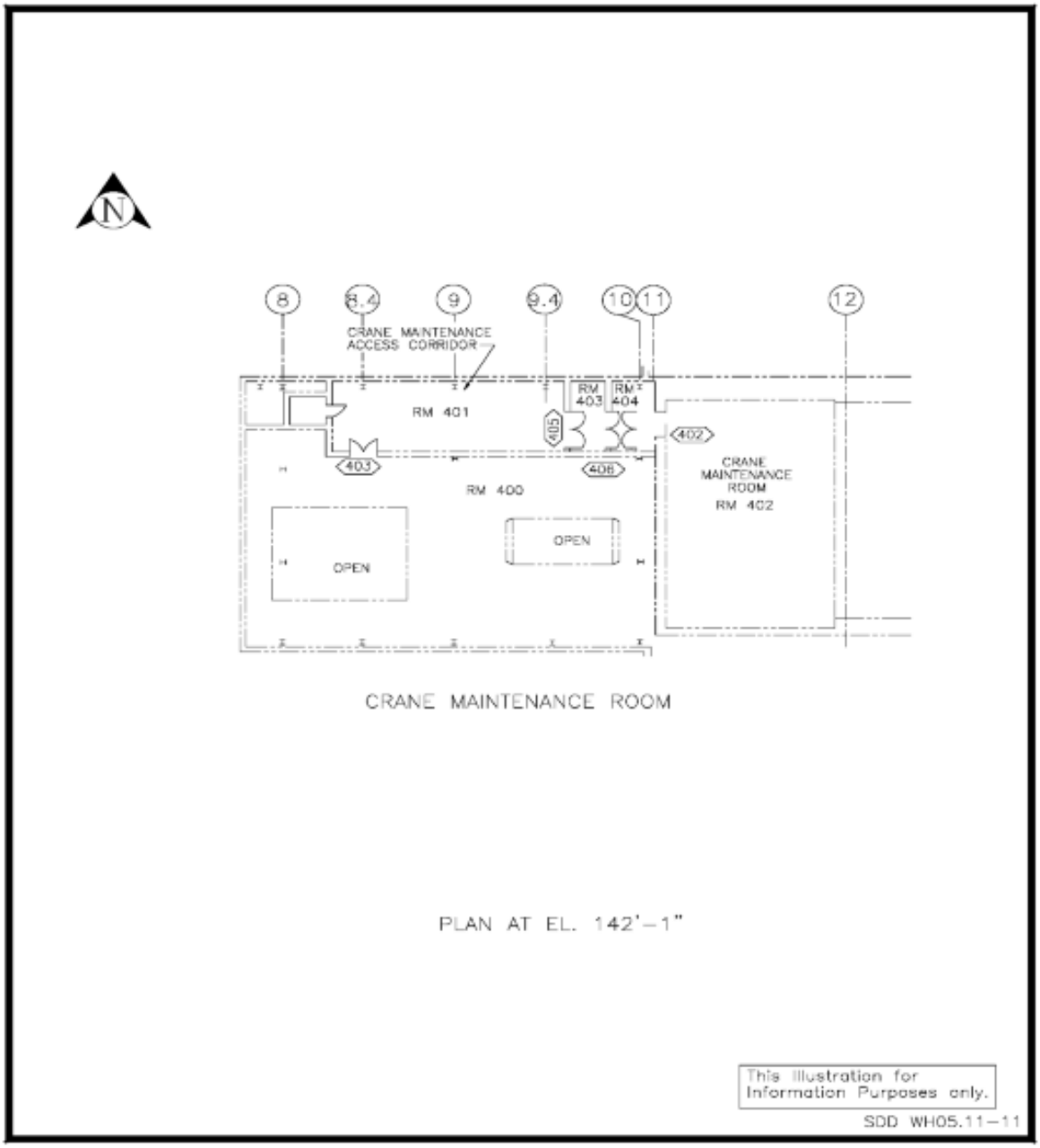

Figure WH II-II-4 – RH Facility Elev. 142' 1"

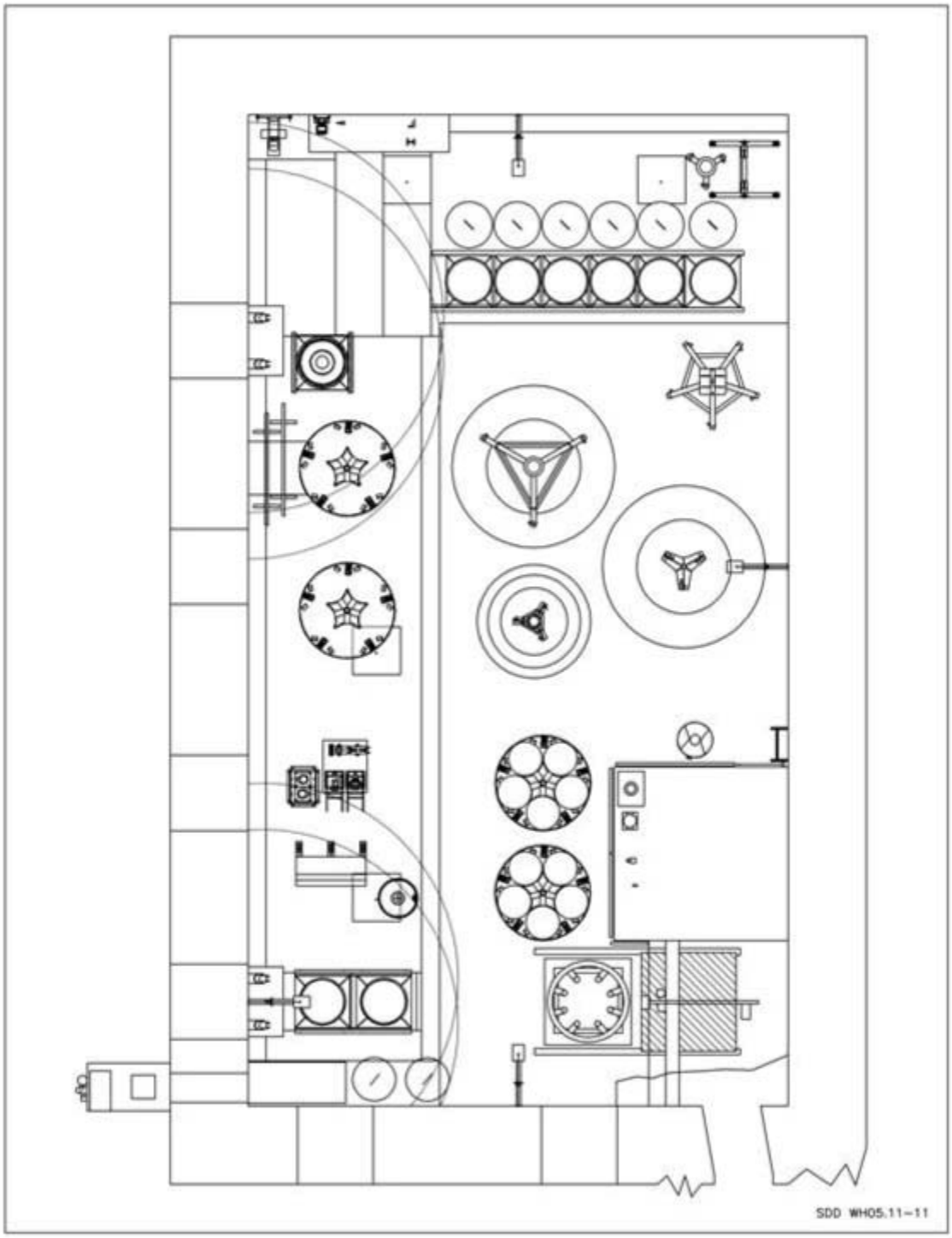

Figure WH II-II-5 – Equipment Layout Hot Cell

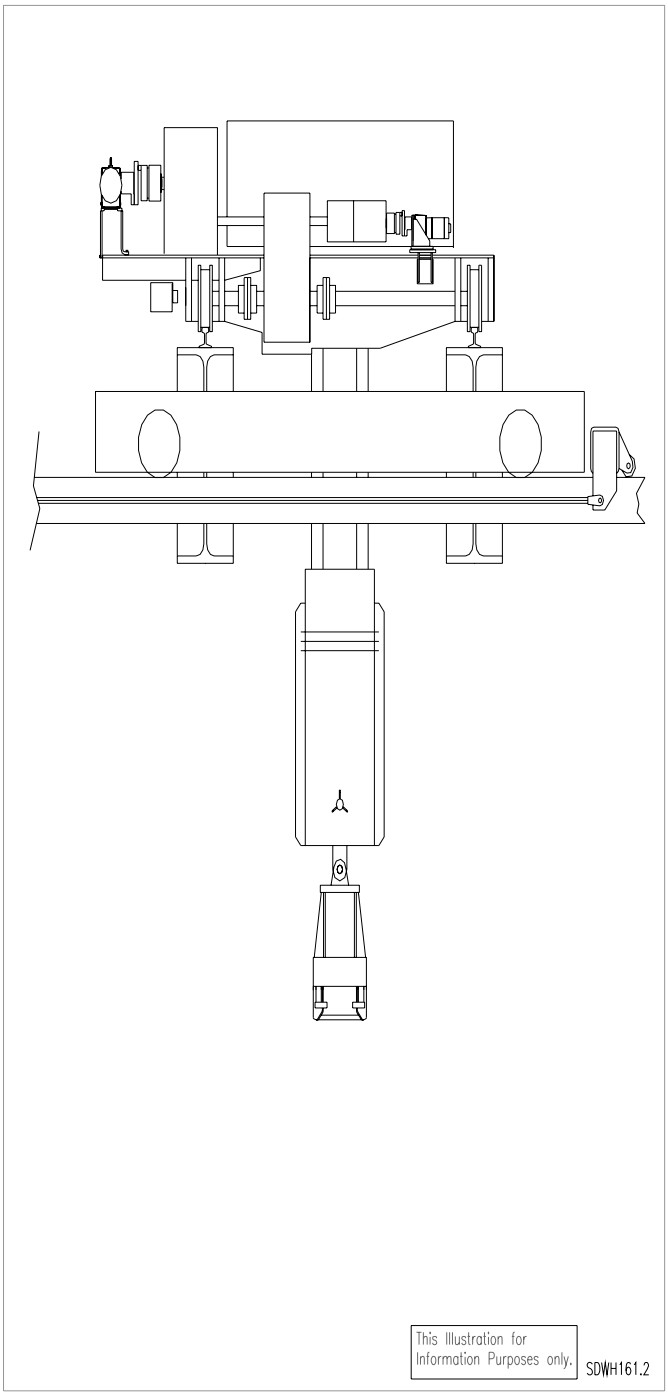

Figure WH II-II-6 – 15-Ton Hot Cell Crane

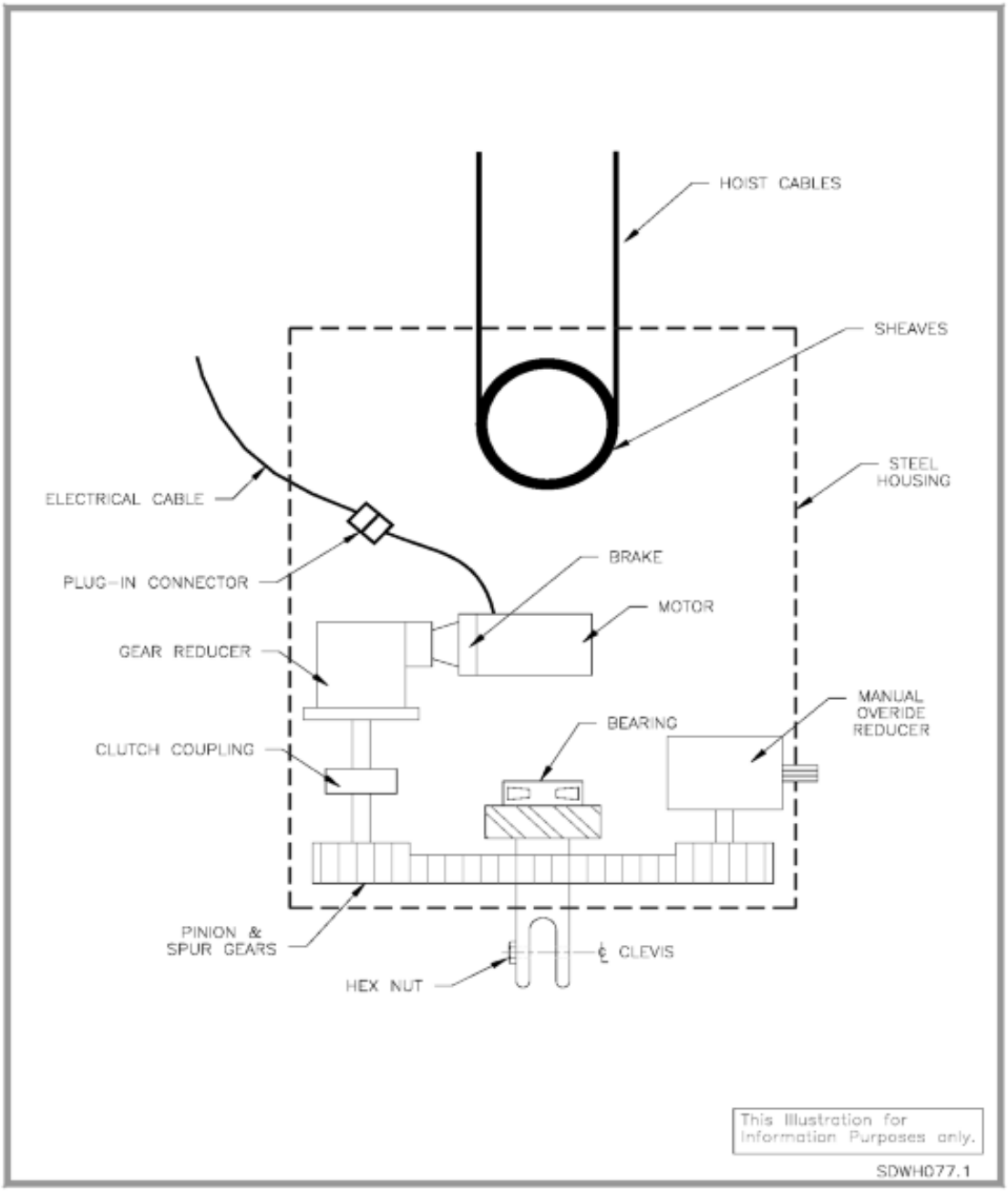

Figure WH II-II-7 – Grapple Rotating Block

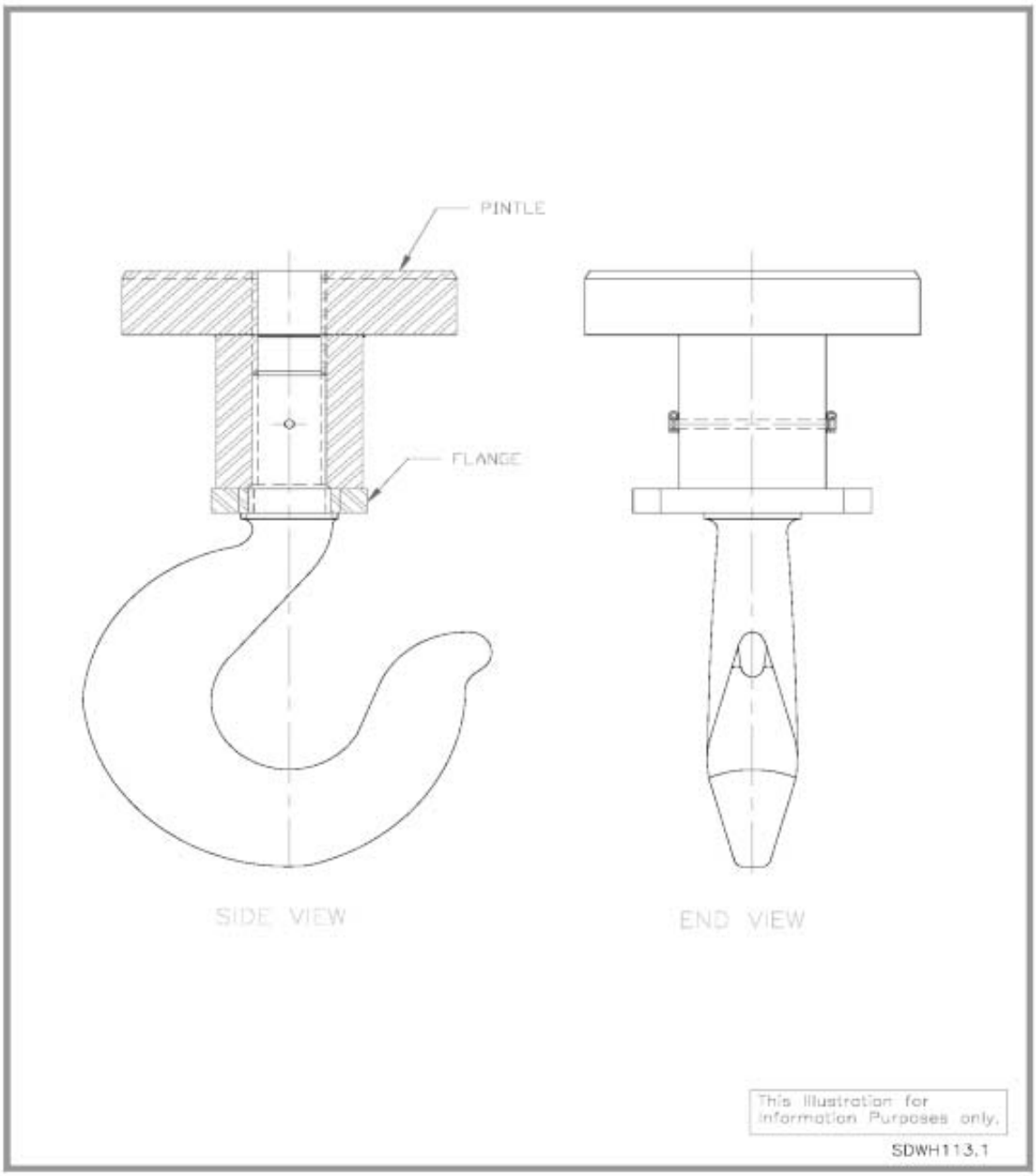

Figure WH II-II-8 – Hot Cell Hook and Flange

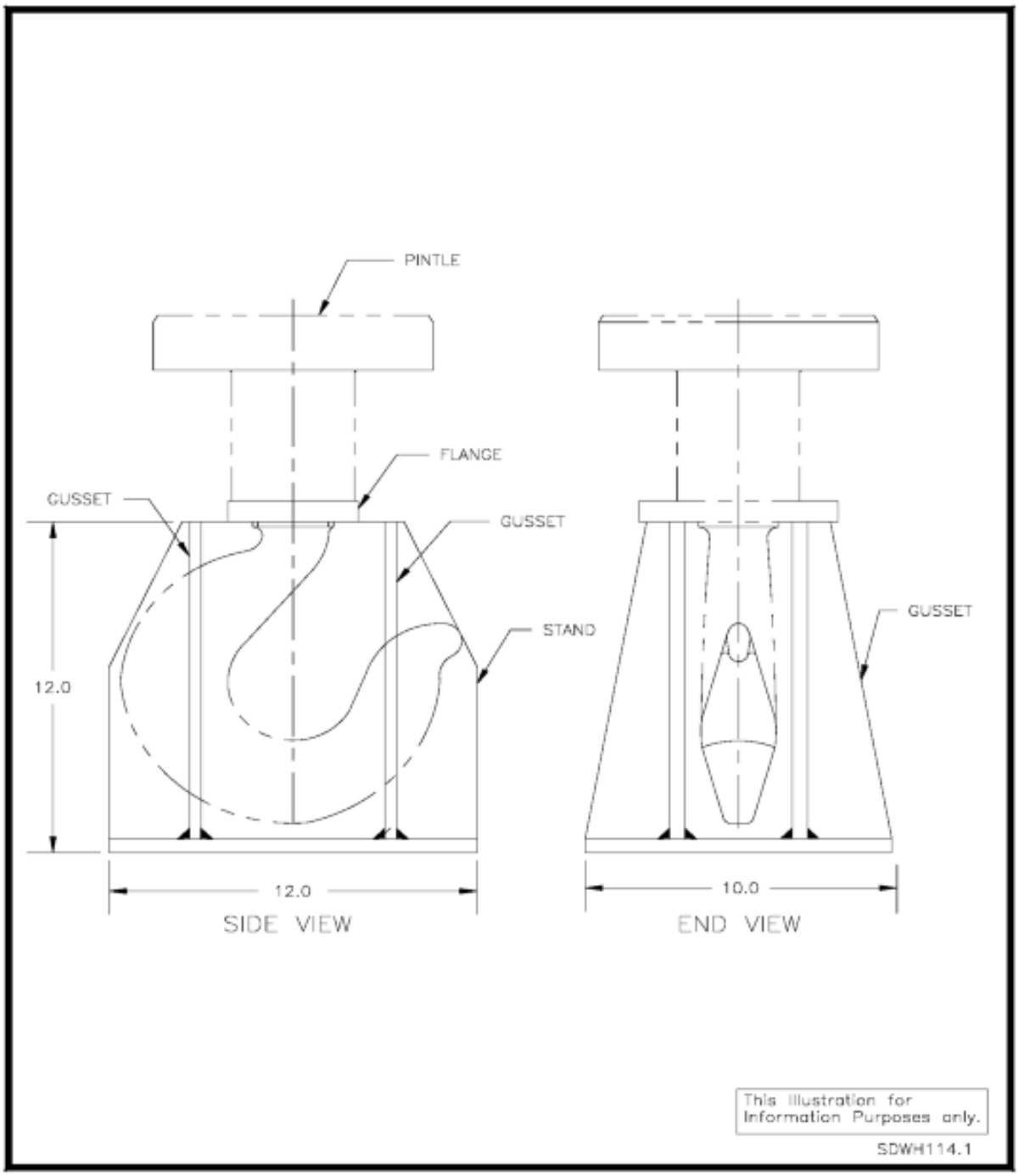

Figure WH II-II-9 – Flange Crane Hook Stand

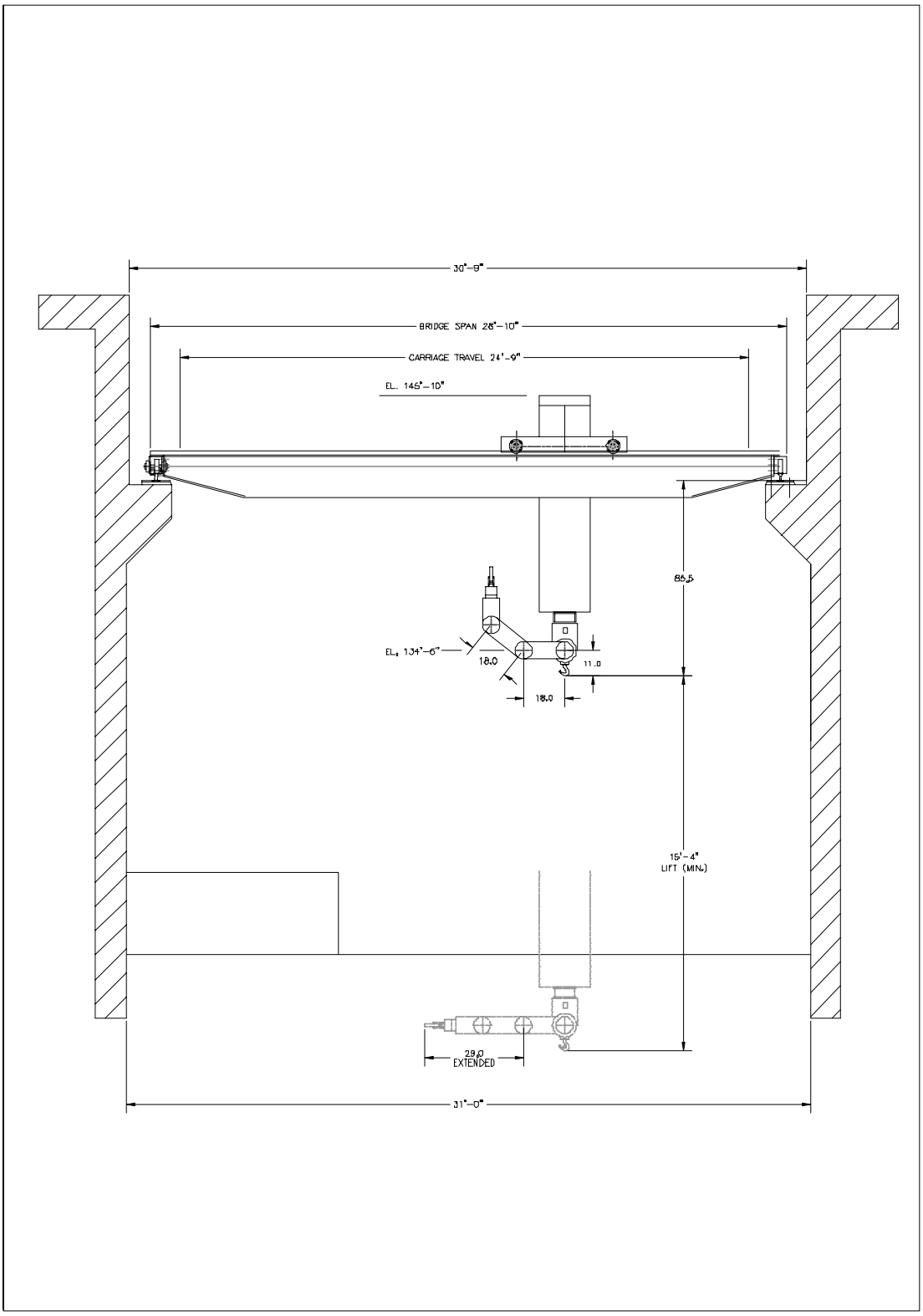

Figure WH II-II-10 – Overhead Powered Manipulator

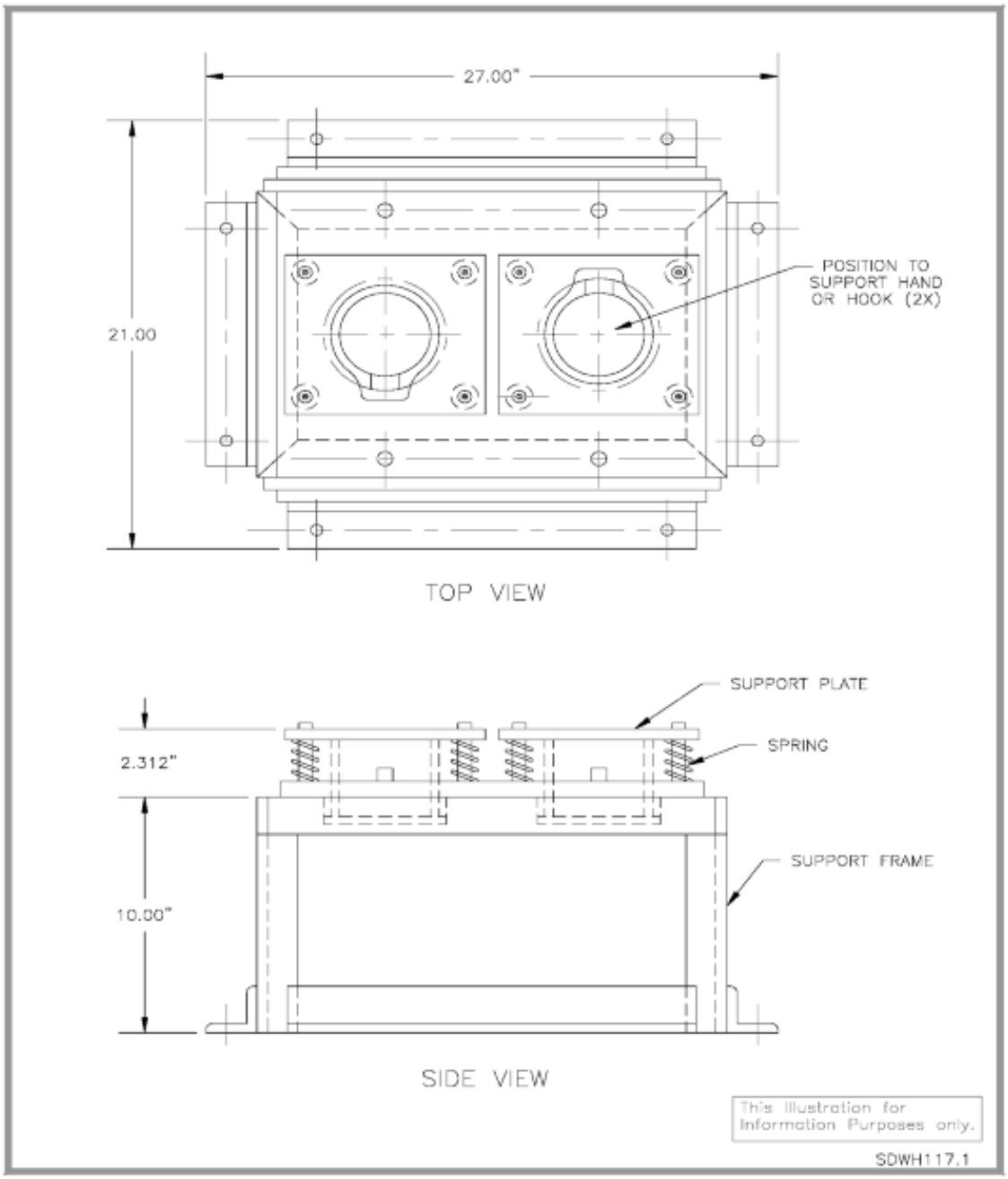

Figure WH II-II-11 – Parallel Jaw Hand/Hook Change Fixture

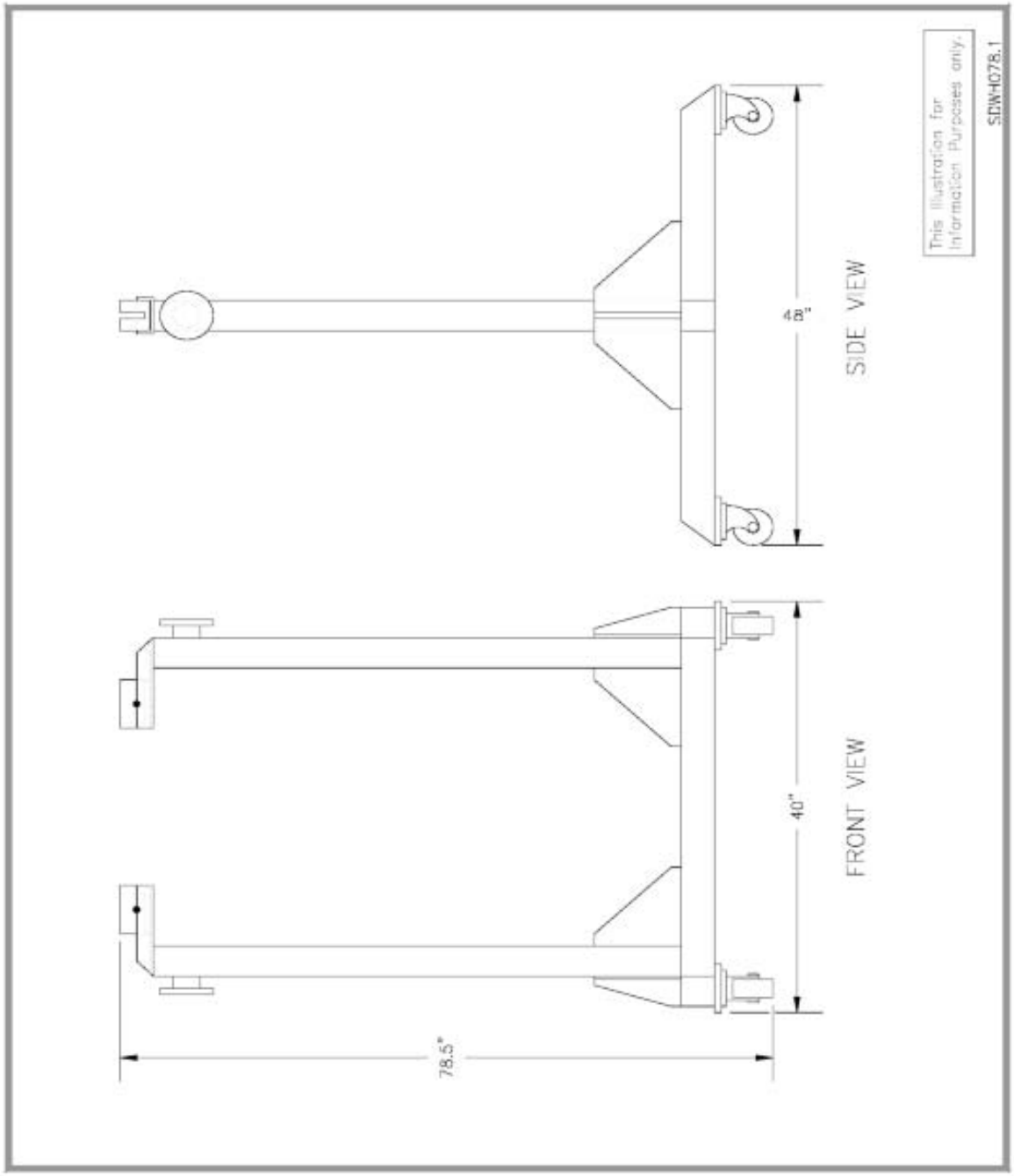

Figure WH II-II-12 – PAR Manipulator Maintenance Stand

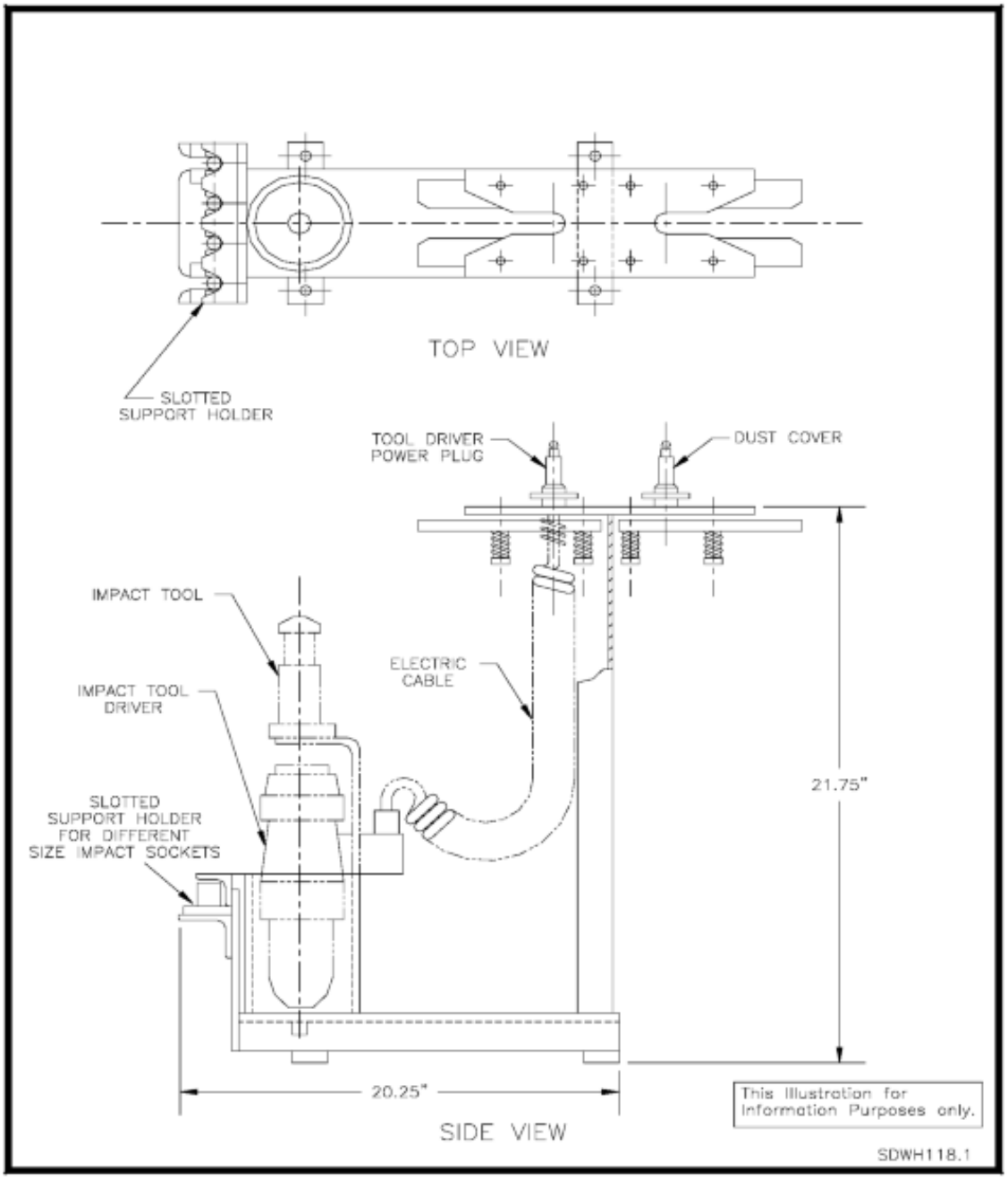

Figure WH II-II-13 – Impact Tool and Fixture

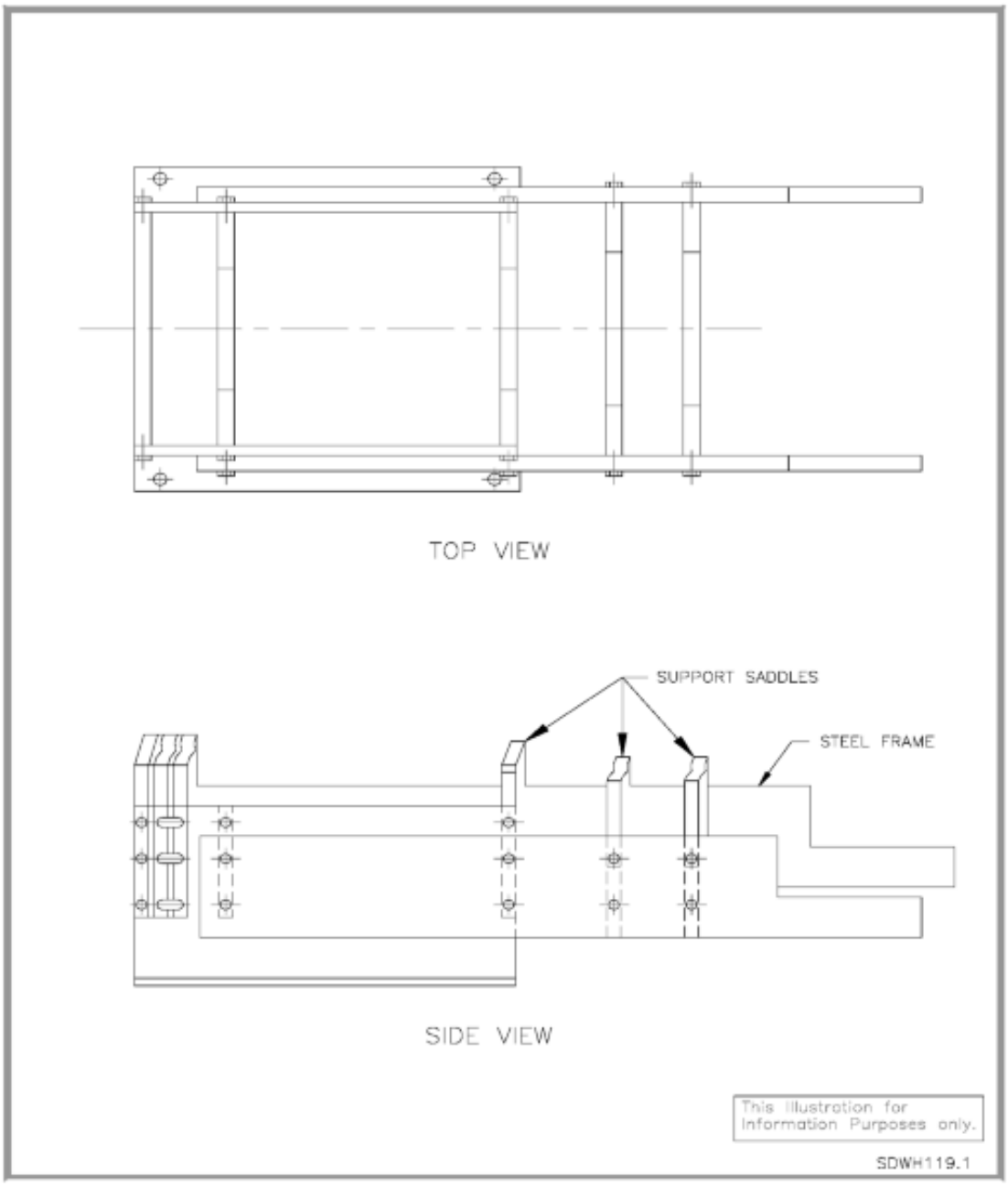

Figure WH II-II-14 – Wrist Release Fixture

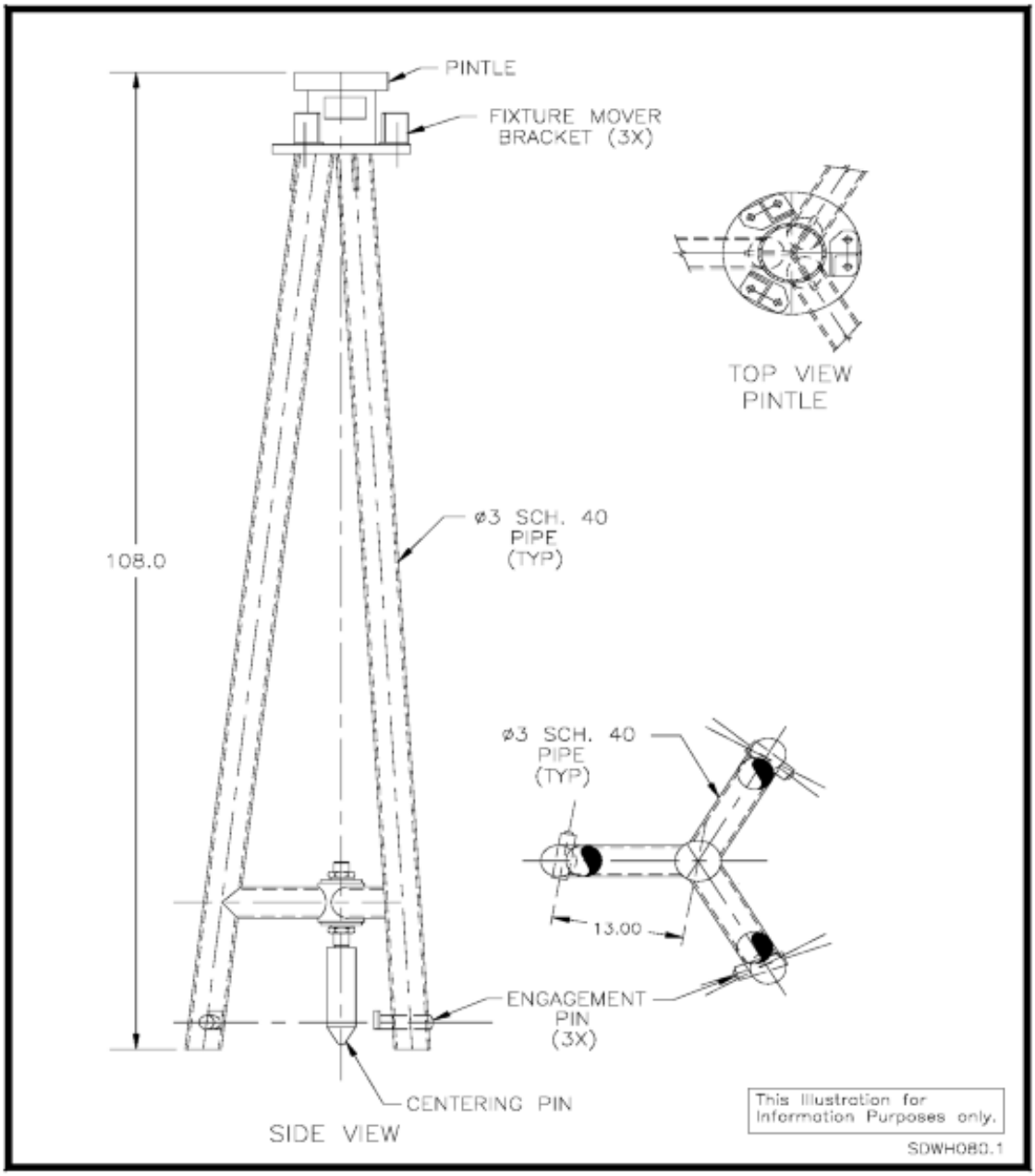

Figure WH II-II-15 – Small Shield Plug Removal Fixture

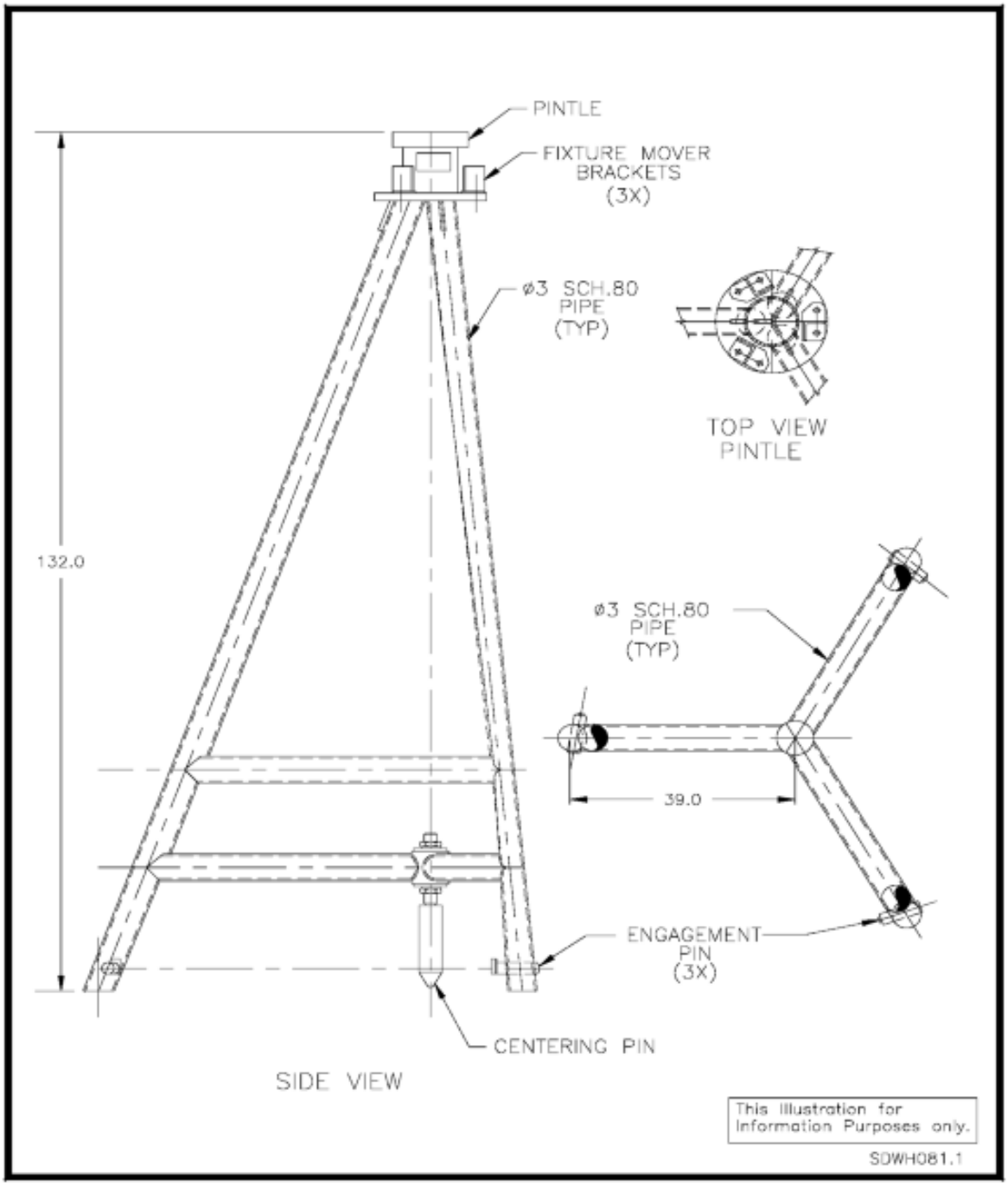

Figure WH II-II-16 – Large Shield Plug Removal Fixture

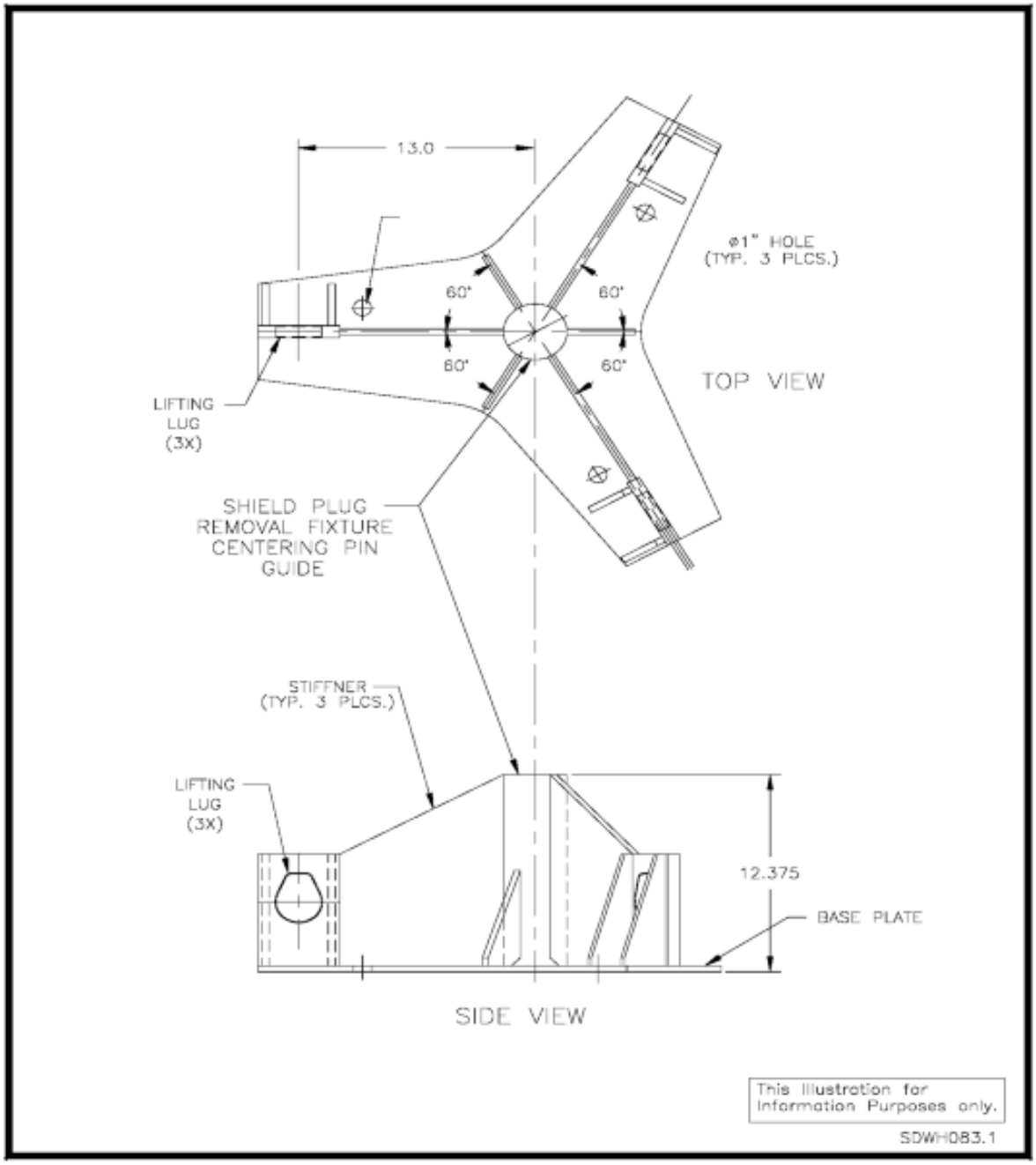

Figure WH II-II-17 – Shield Plug Removal Adapter

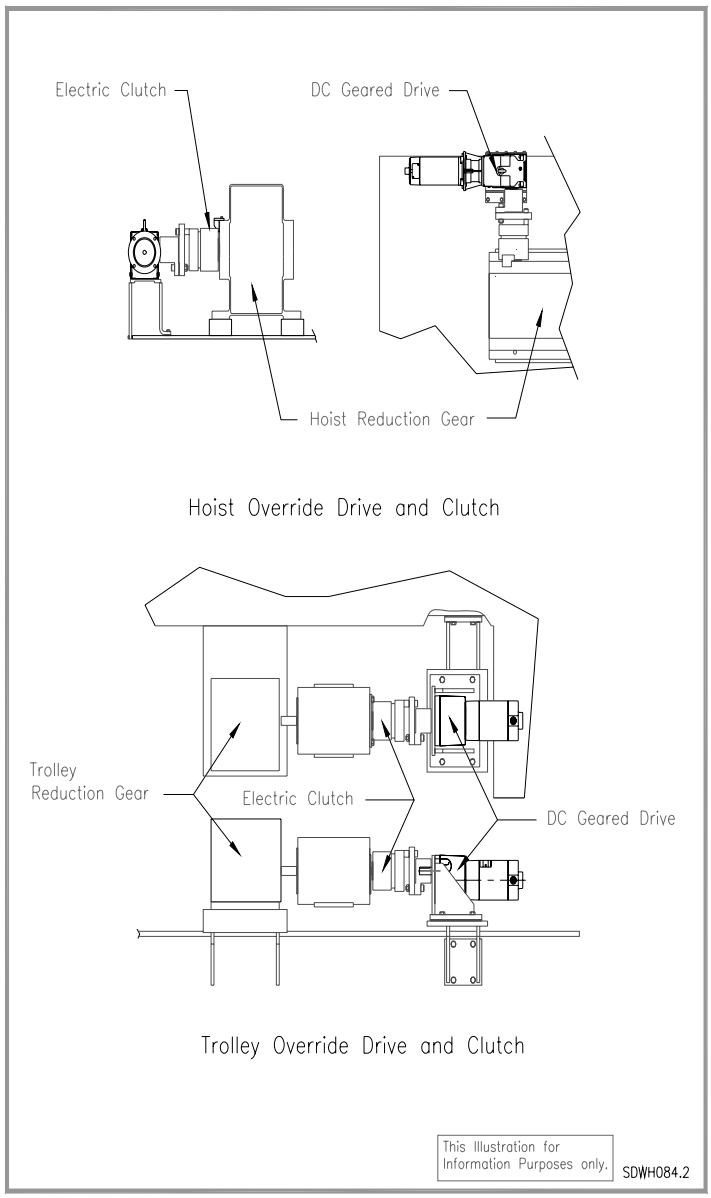

Figure WH II-II-18 – Crane Hoist and Trolley Override Drives

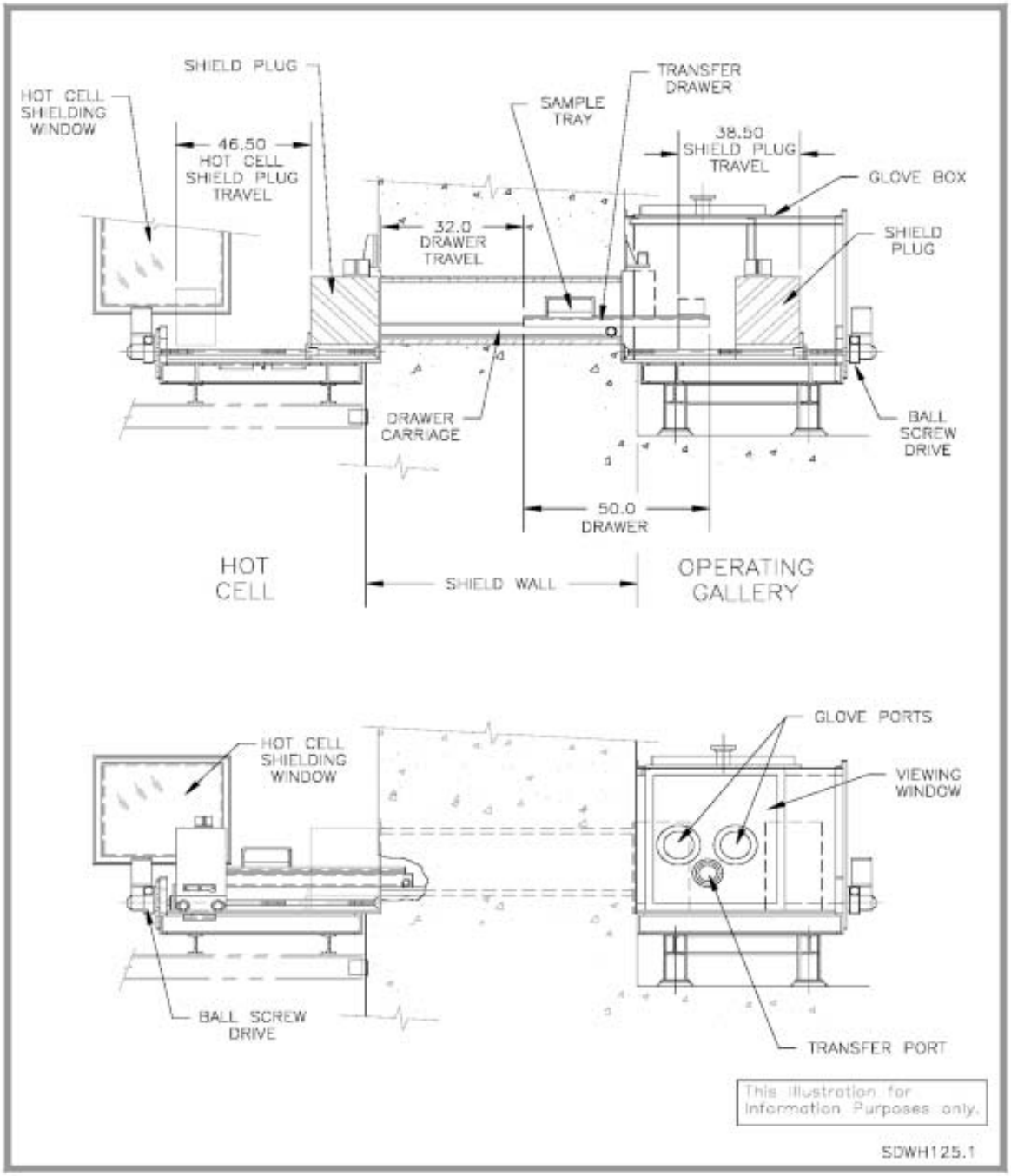

Figure WH II-II-19 - Transfer Drawer

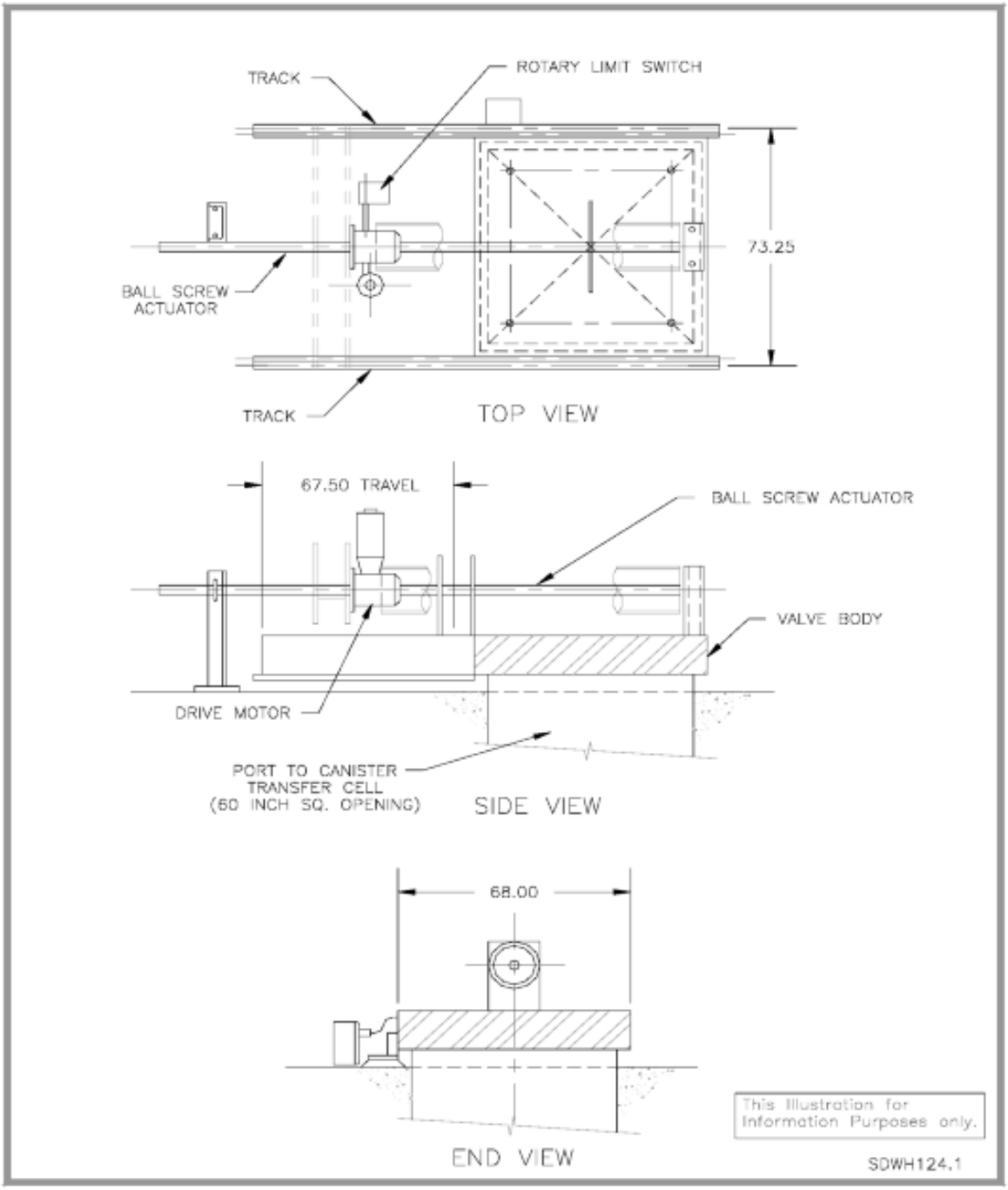

Figure WH II-II-20 – Hot Cell Floor Shield Valve

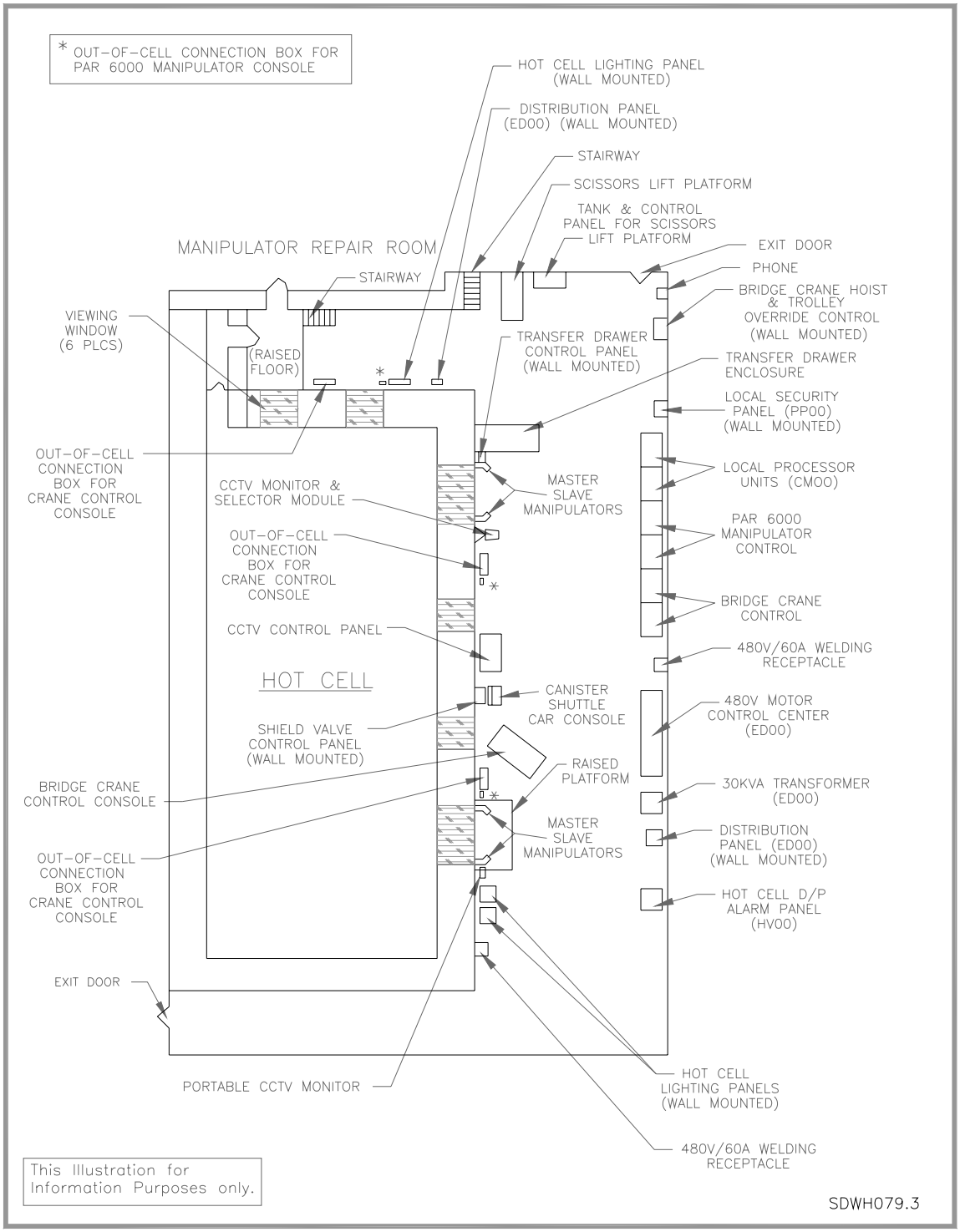

Figure WH II-II-21 – Operating Gallery Equipment and Control Panels

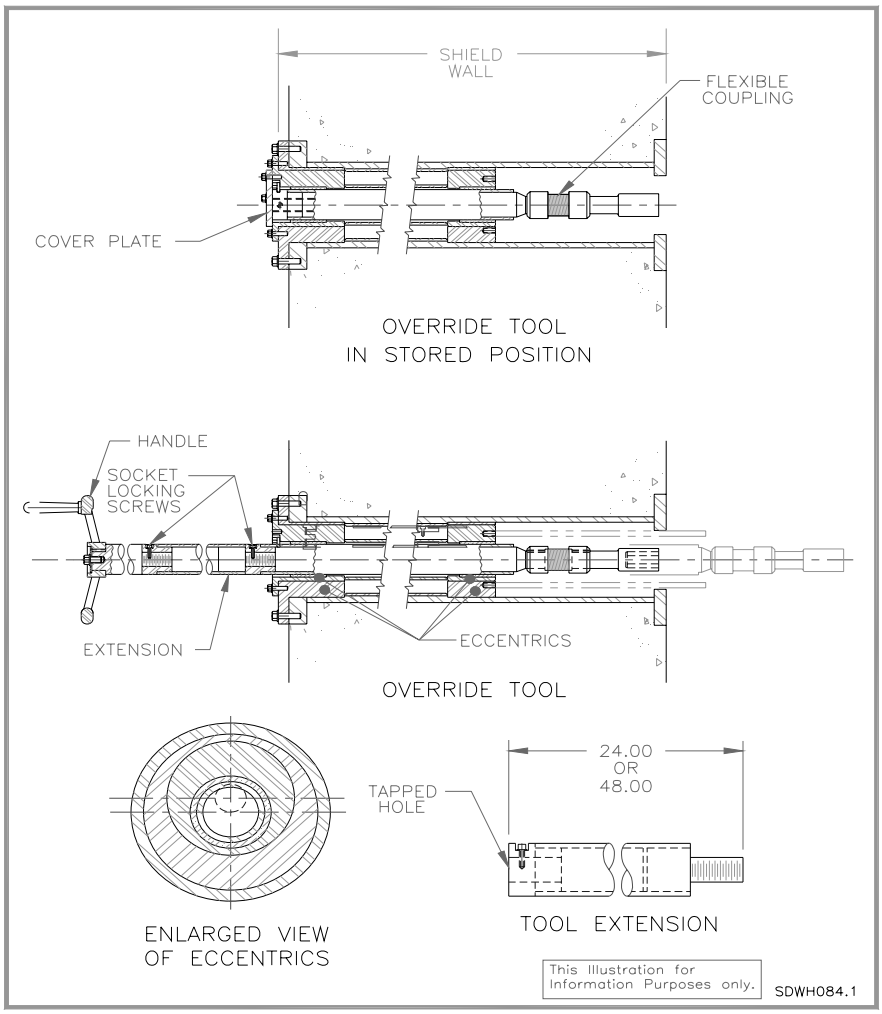

Figure WH II-II-22 – Grapple Override Tool

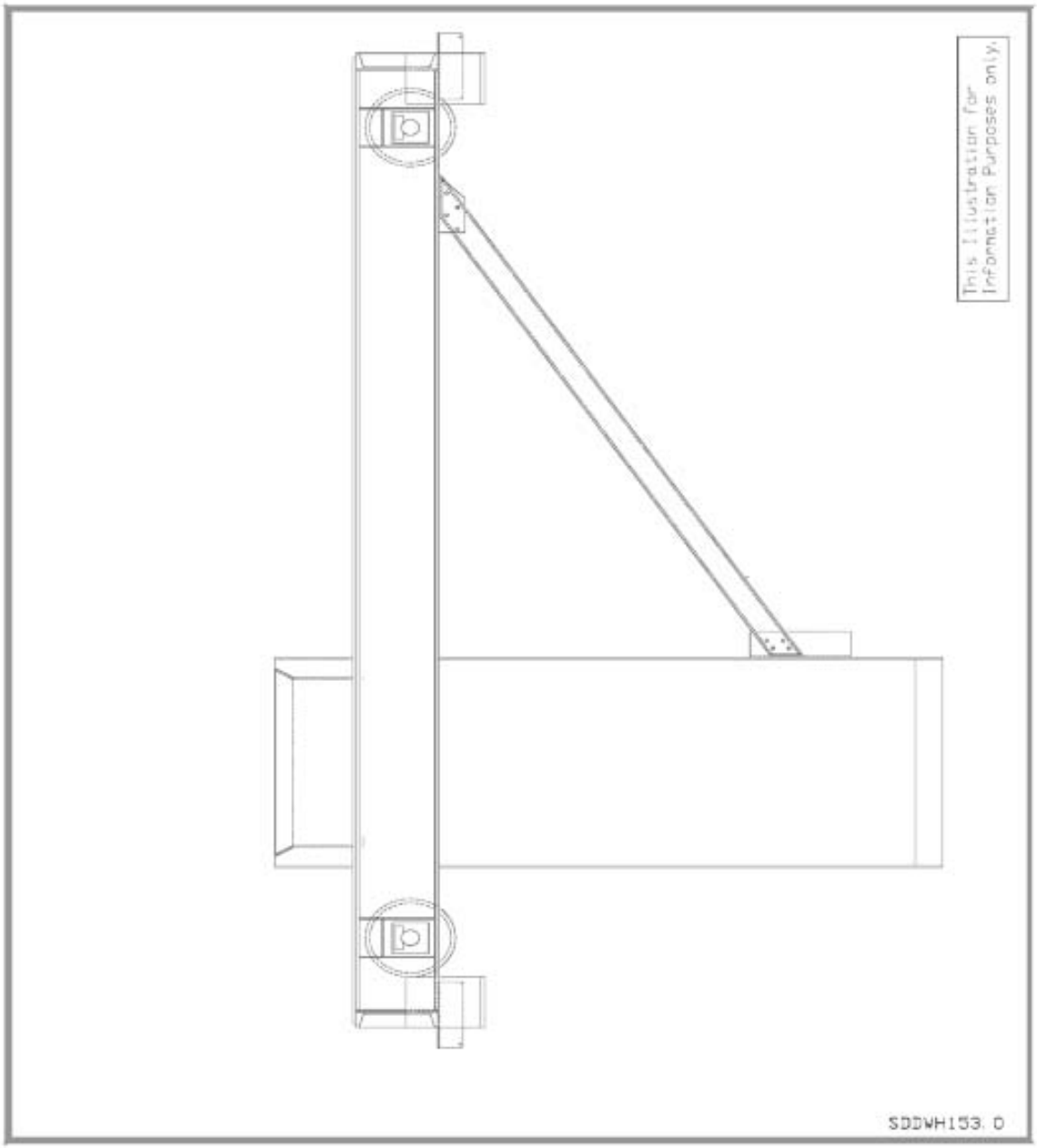

Figure WH II-II-23 – Canister Shuttle Car

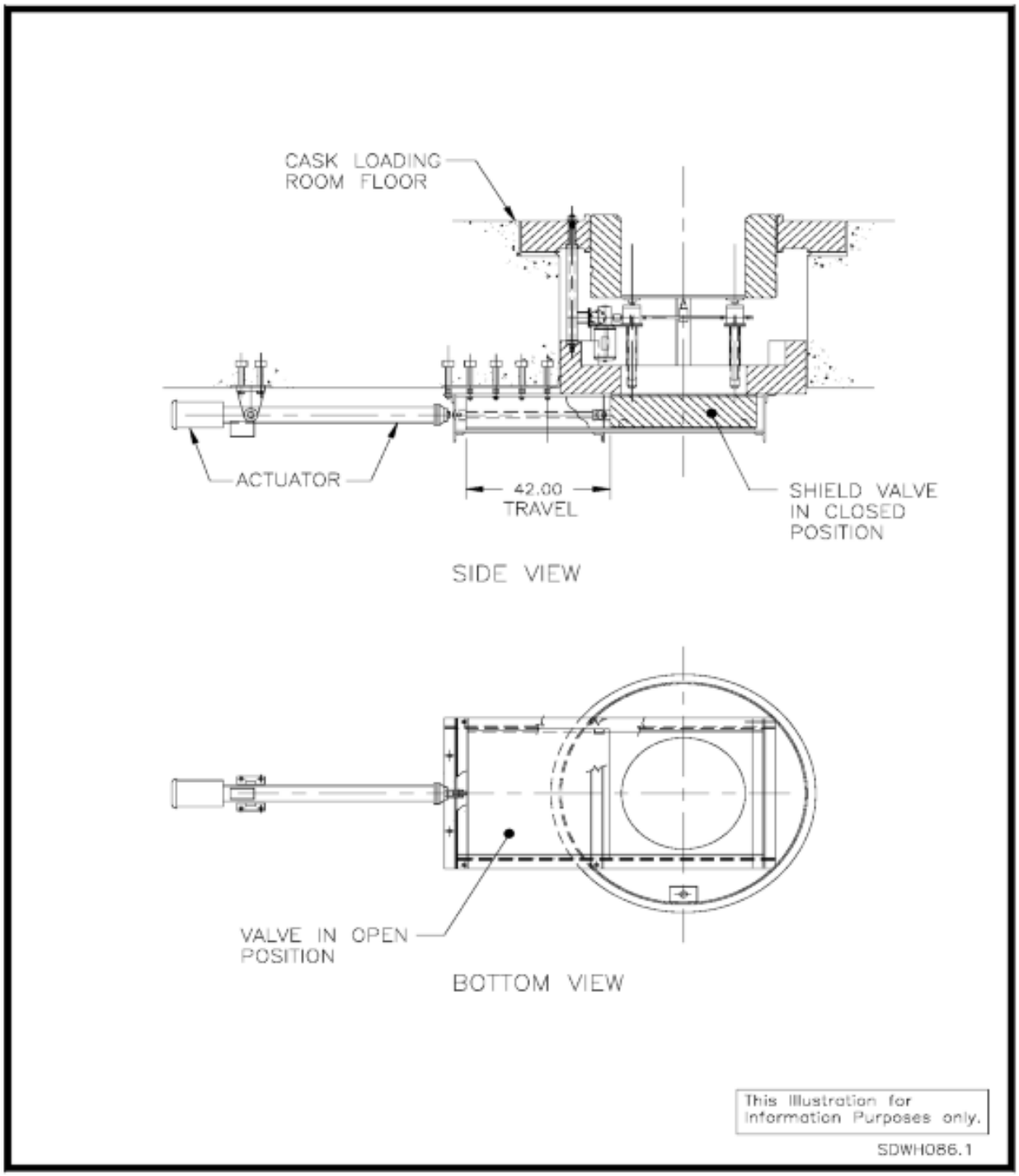

Figure WH II-II-24 – Transfer Cell Shield Valve and Actuator

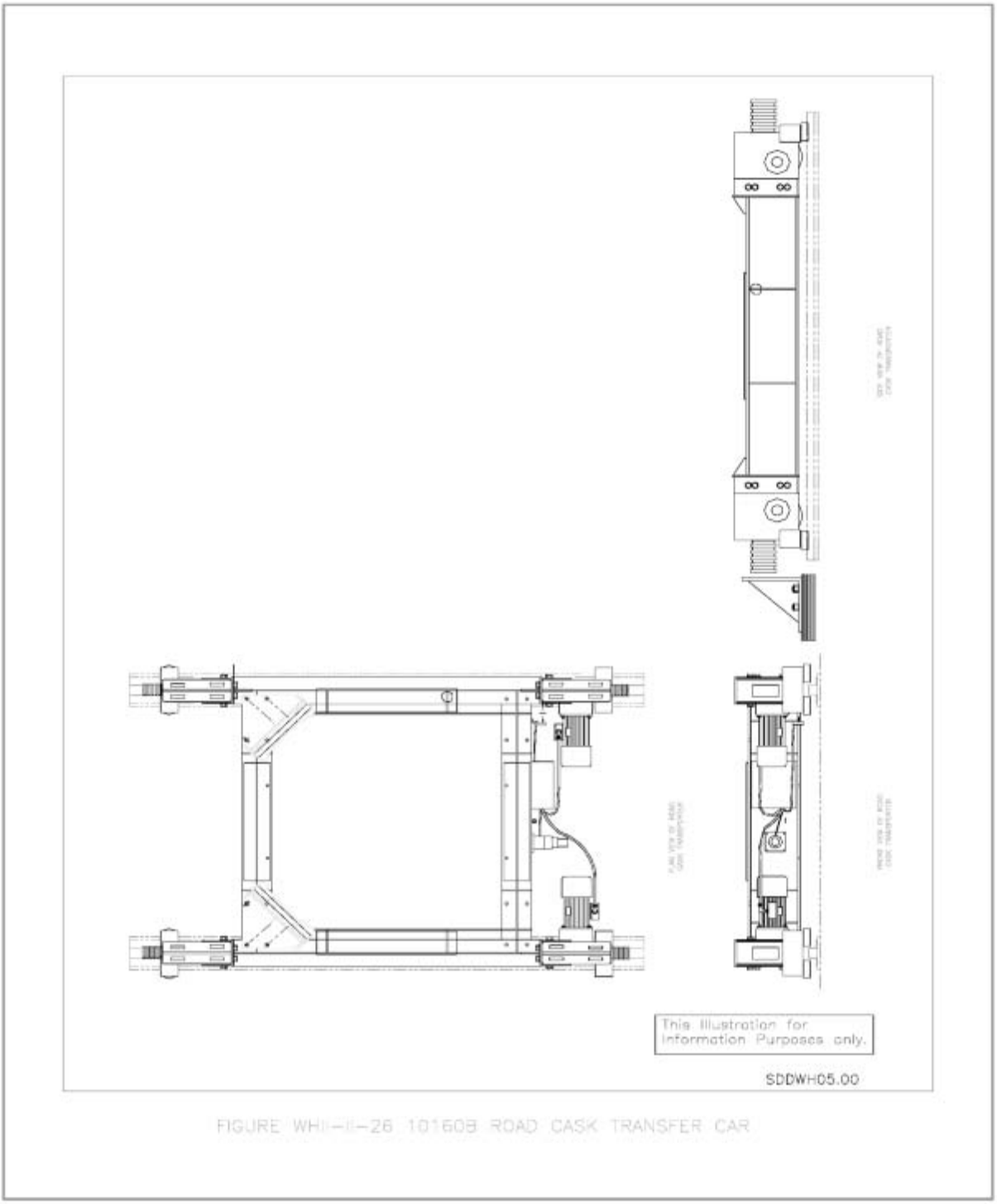

Figure WH II-II-25 – 10-160B Road Cask Transfer Car

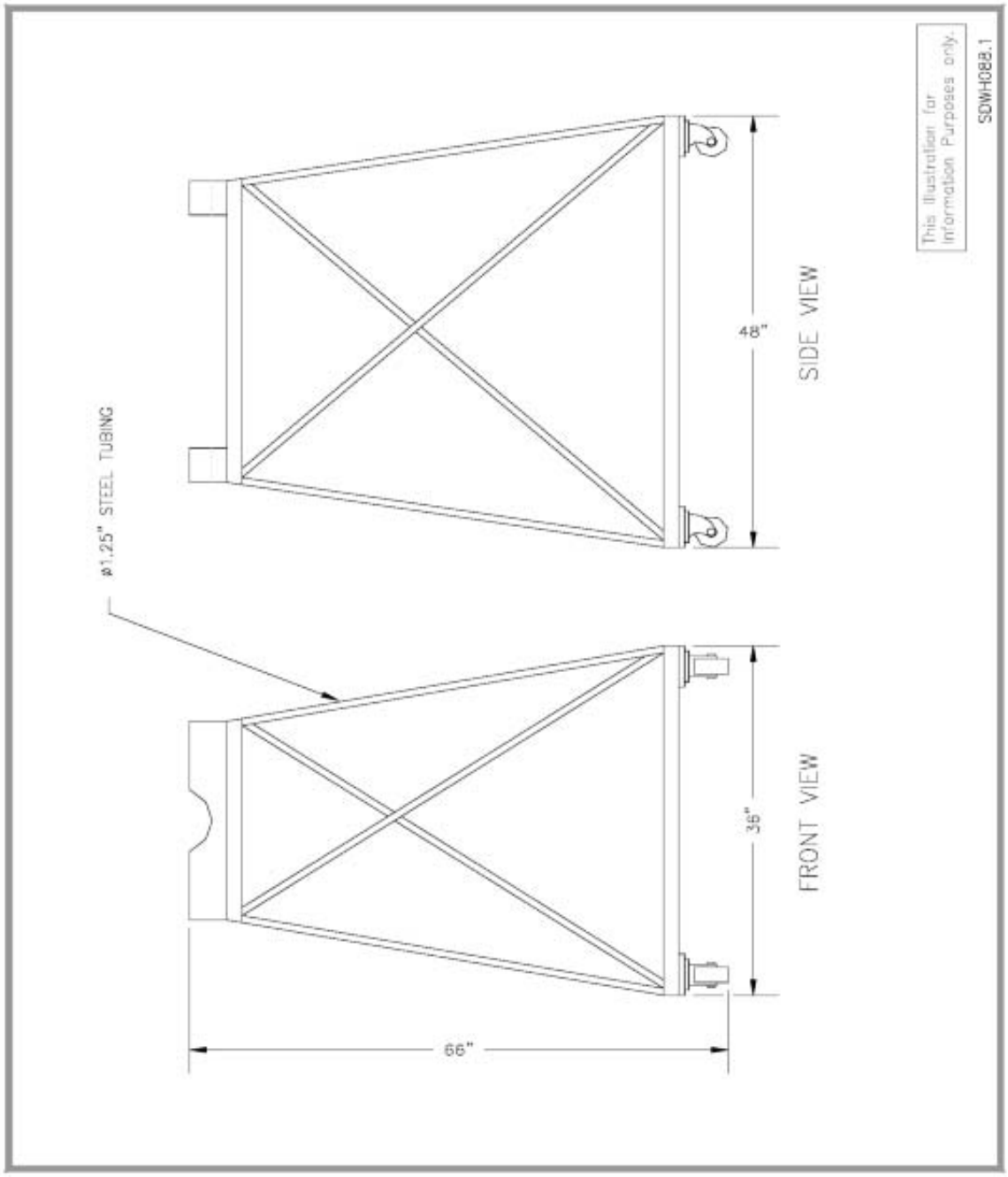

Figure WH II-II-26 – M/S Manipulator Repair Stand

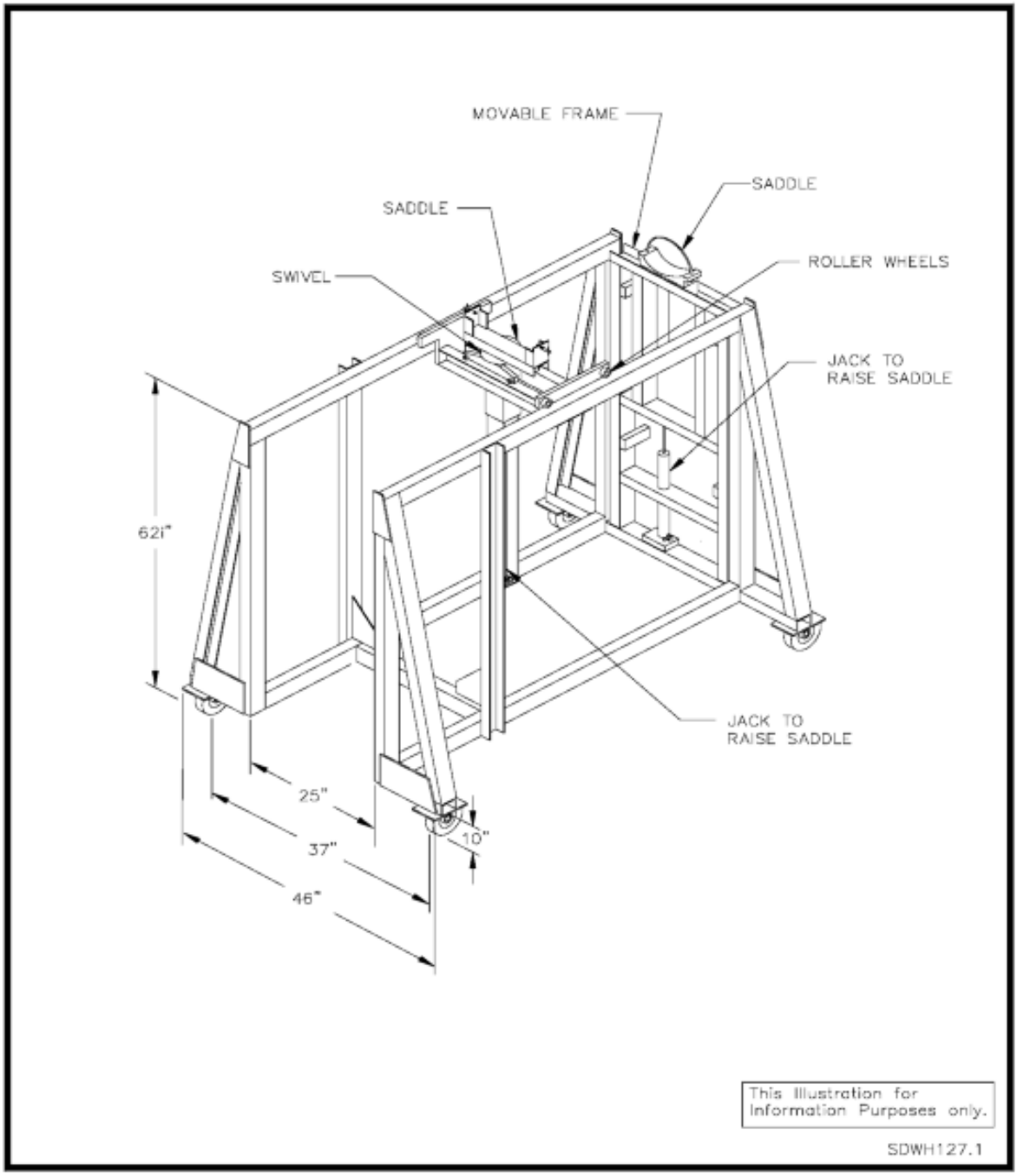

Figure WH II-II-27 – M/S Manipulator Cart

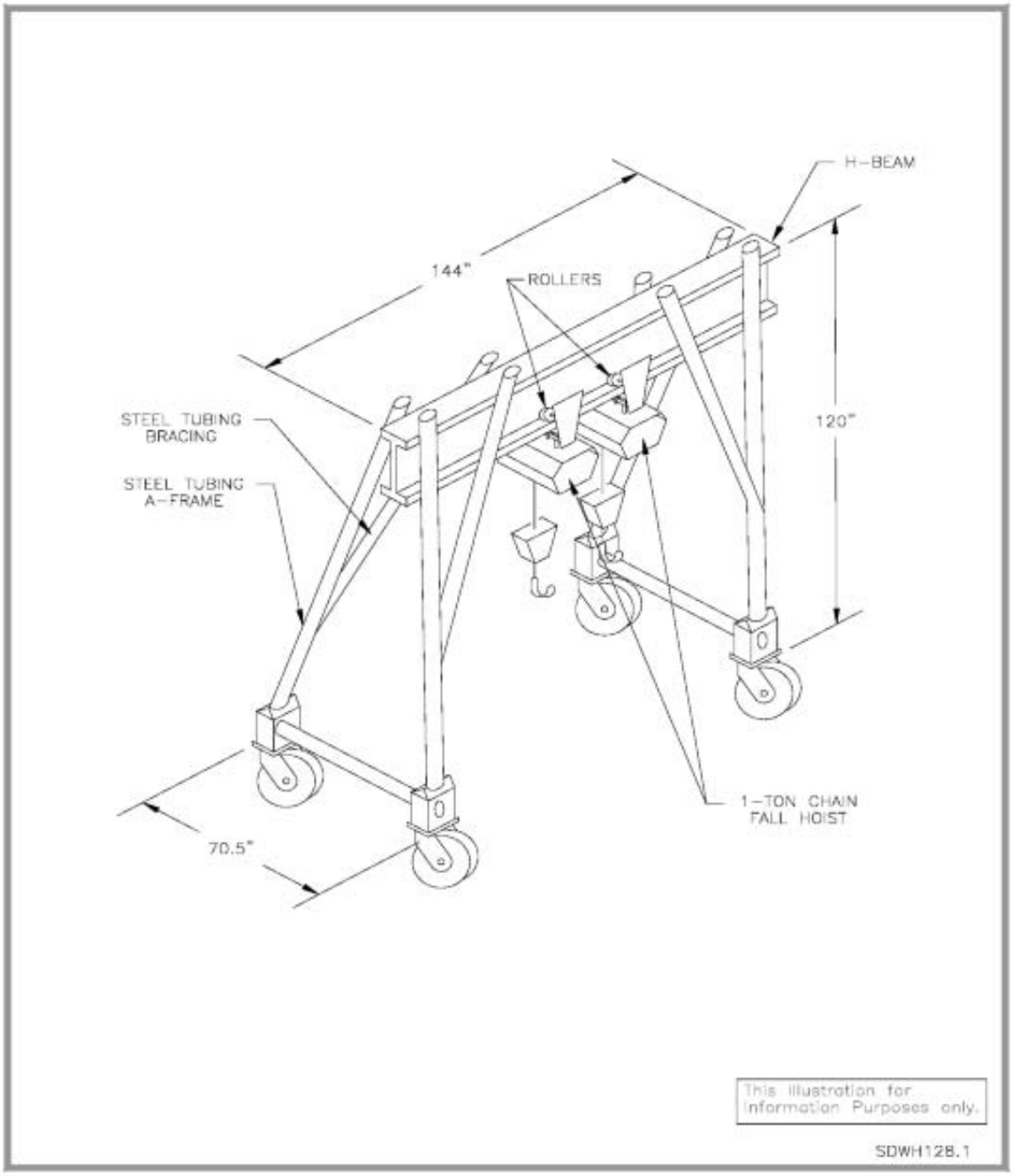

Figure WH II-II-28 – M/S Manipulator Gantry Crane

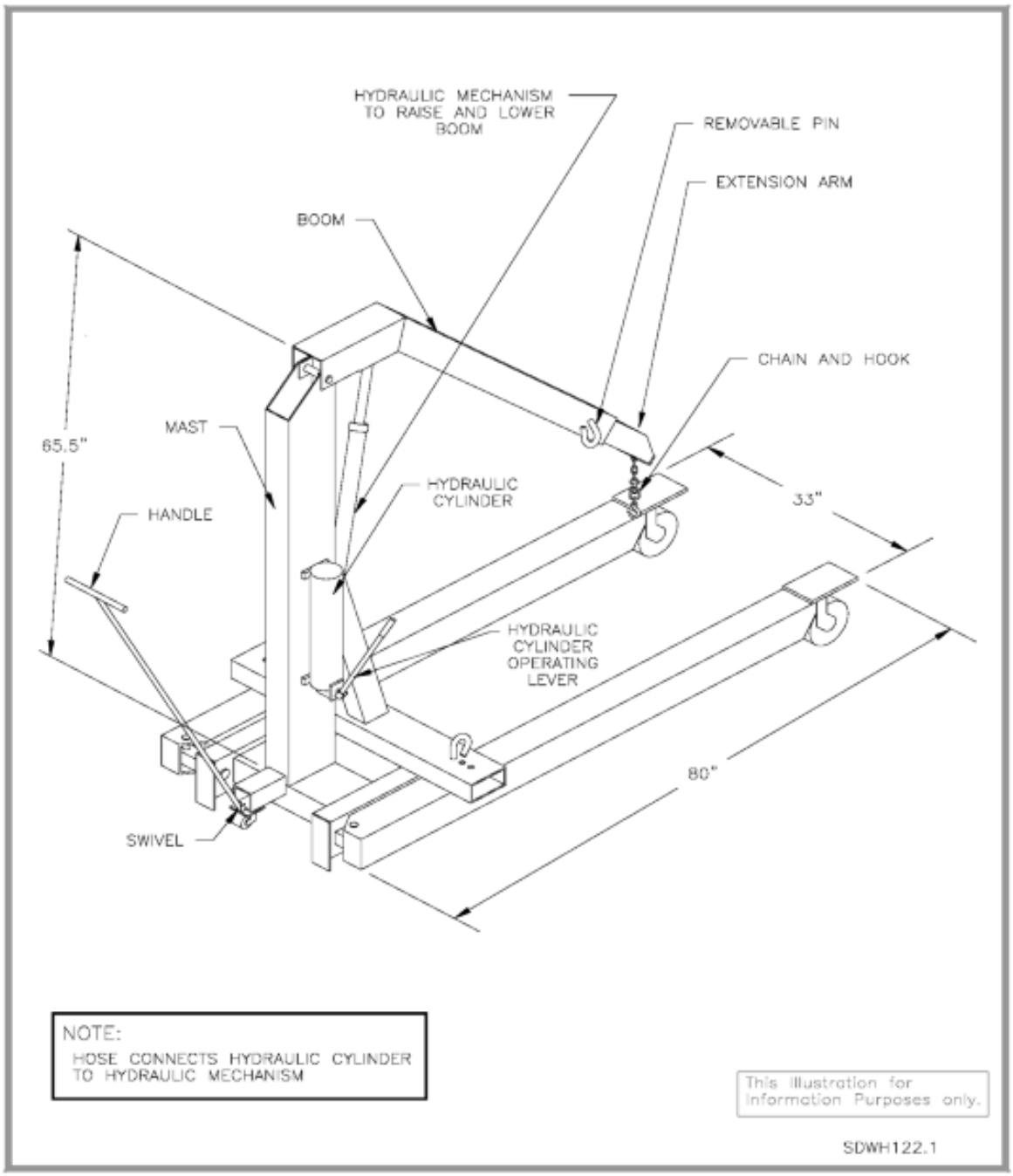

Figure WH II-II-29 – Portable Lift Dolly

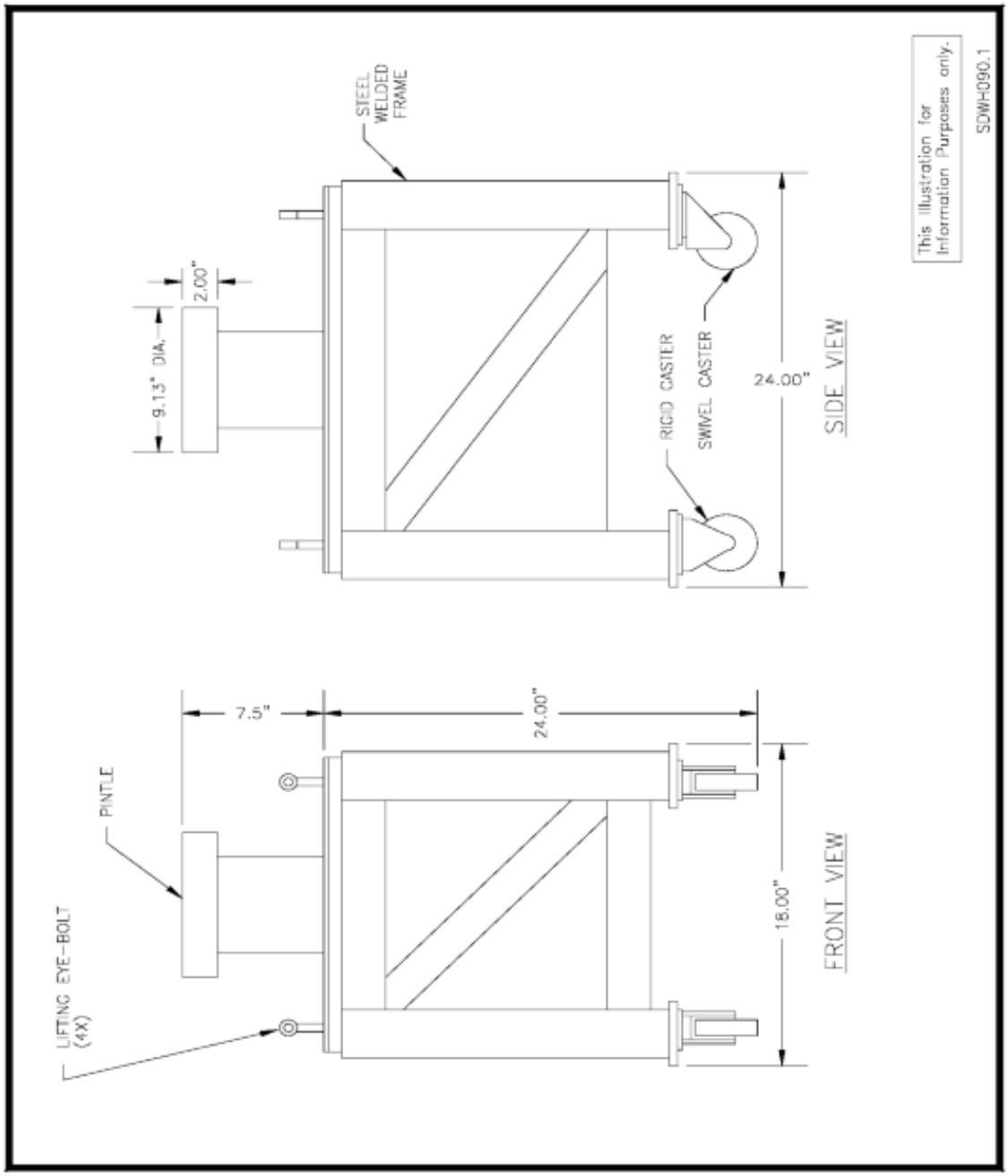

Figure WH II-II-30 – Grapple Repair Cart

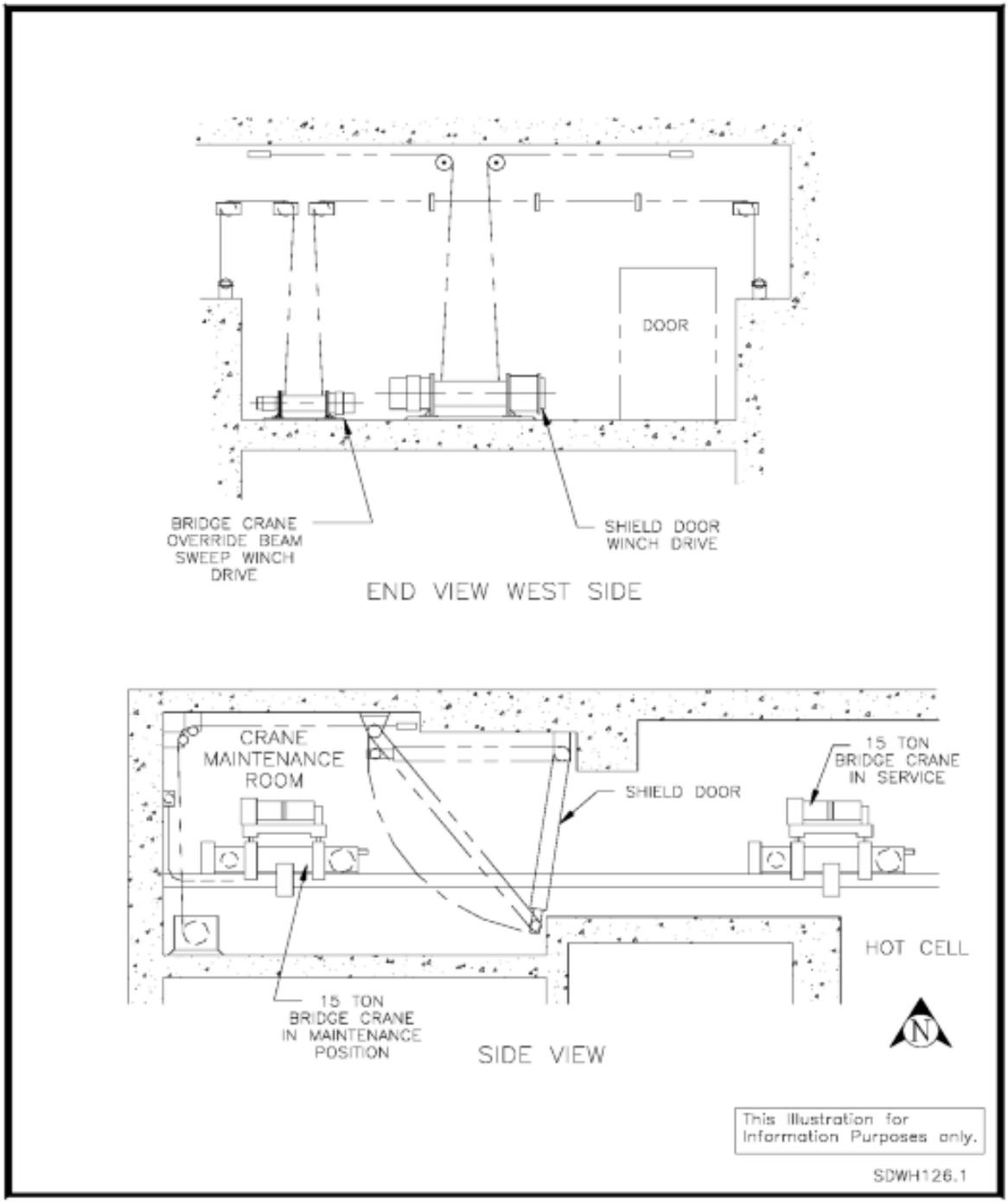

Figure WH II-II-31 – Crane Maintenance Room (Layout)

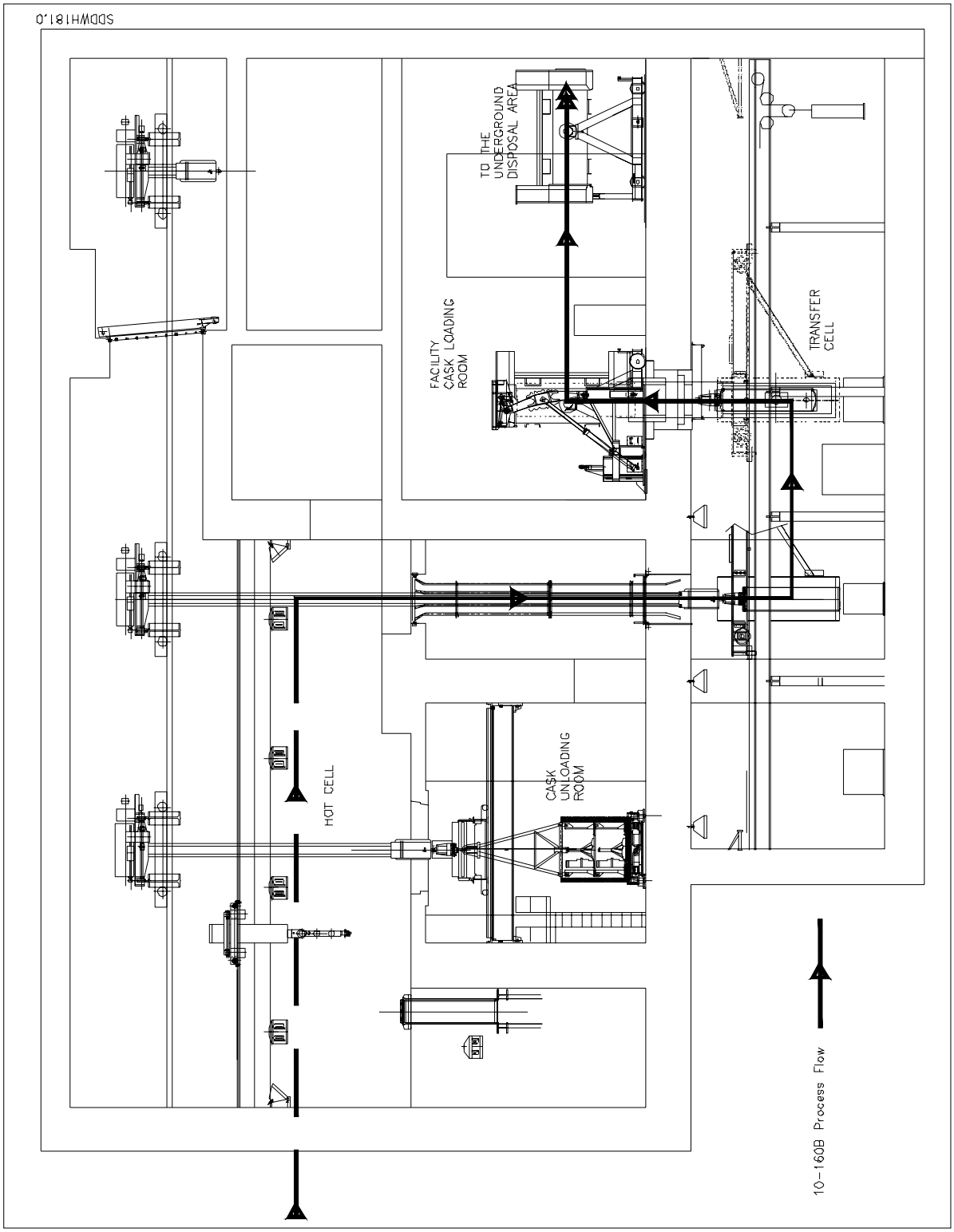

Figure WH II-II-32 – 10-160B Waste Handling Process

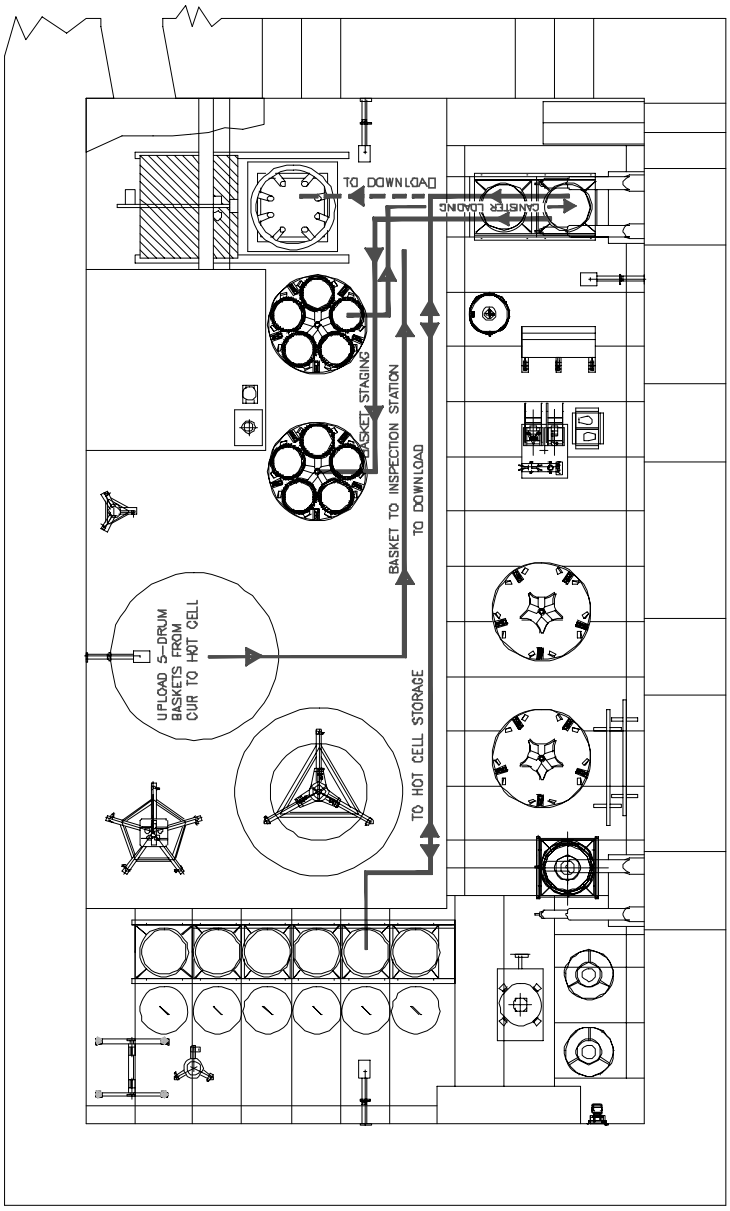

Figure WH II-II-33 – 10-160B Hot Cell Process Flow Diagram

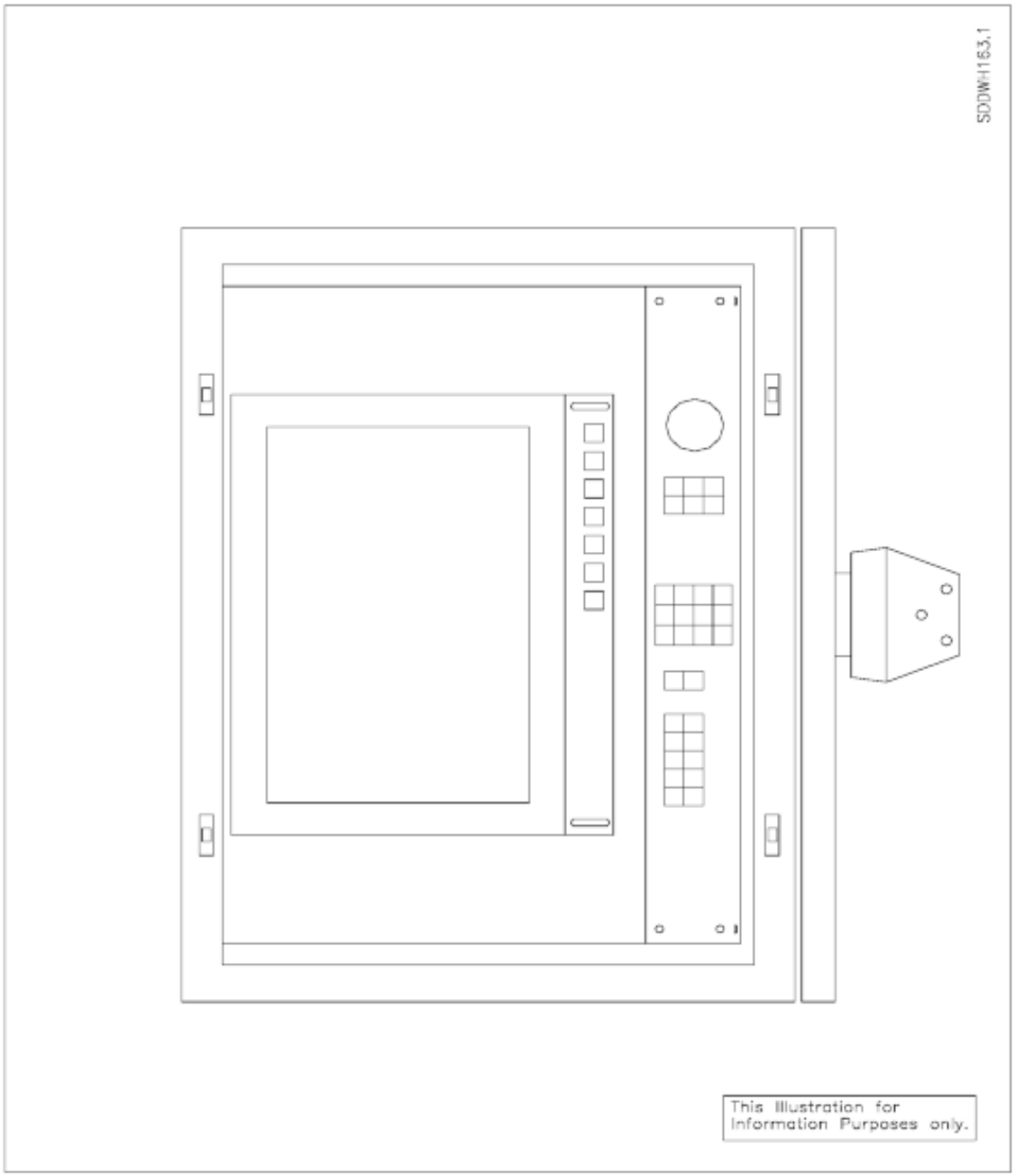

Figure WH II-II-34 – CCTV Console Wall Mount

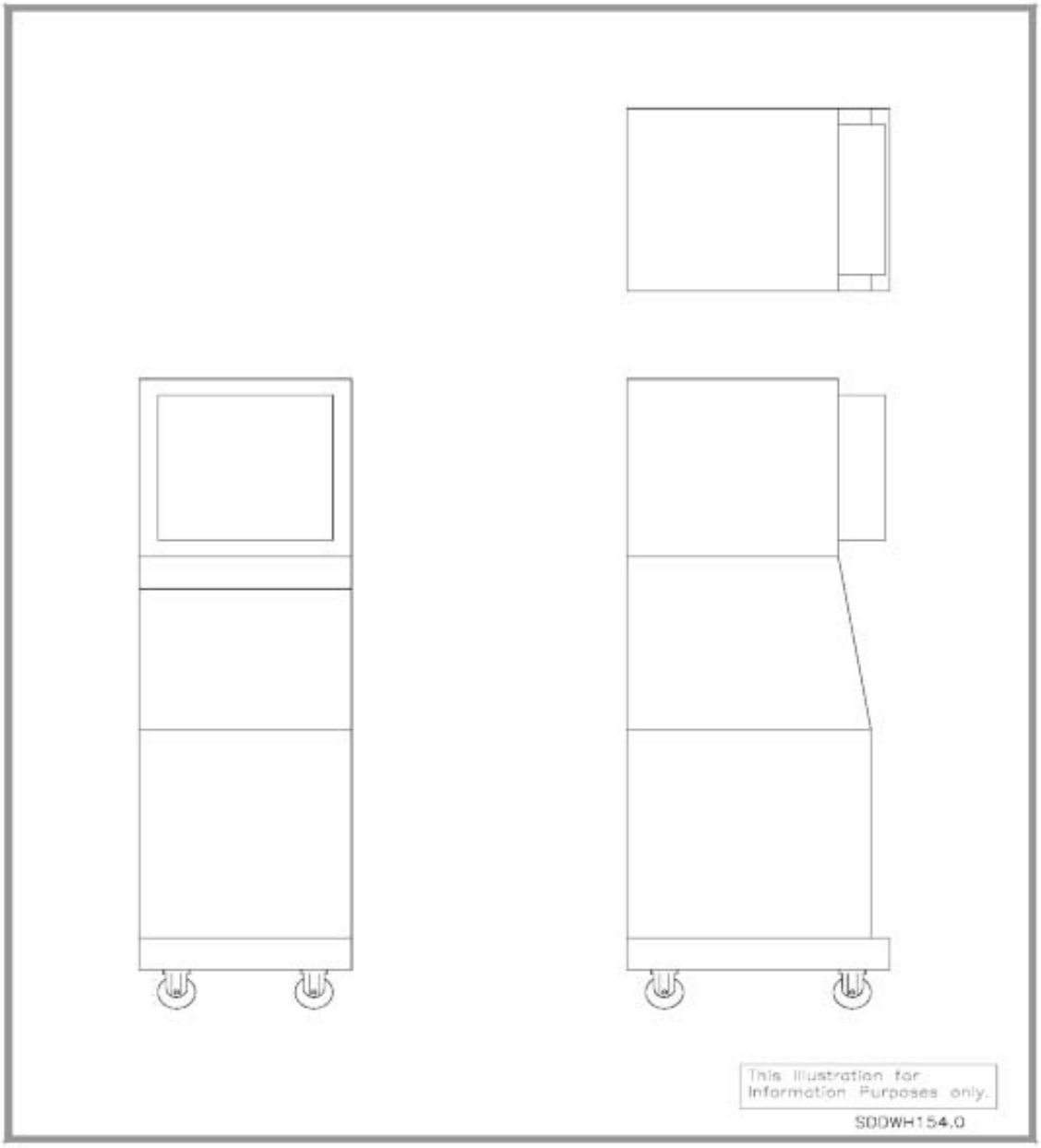

Figure WH II-II-35 – CCTV Console, Stand Up Control Point

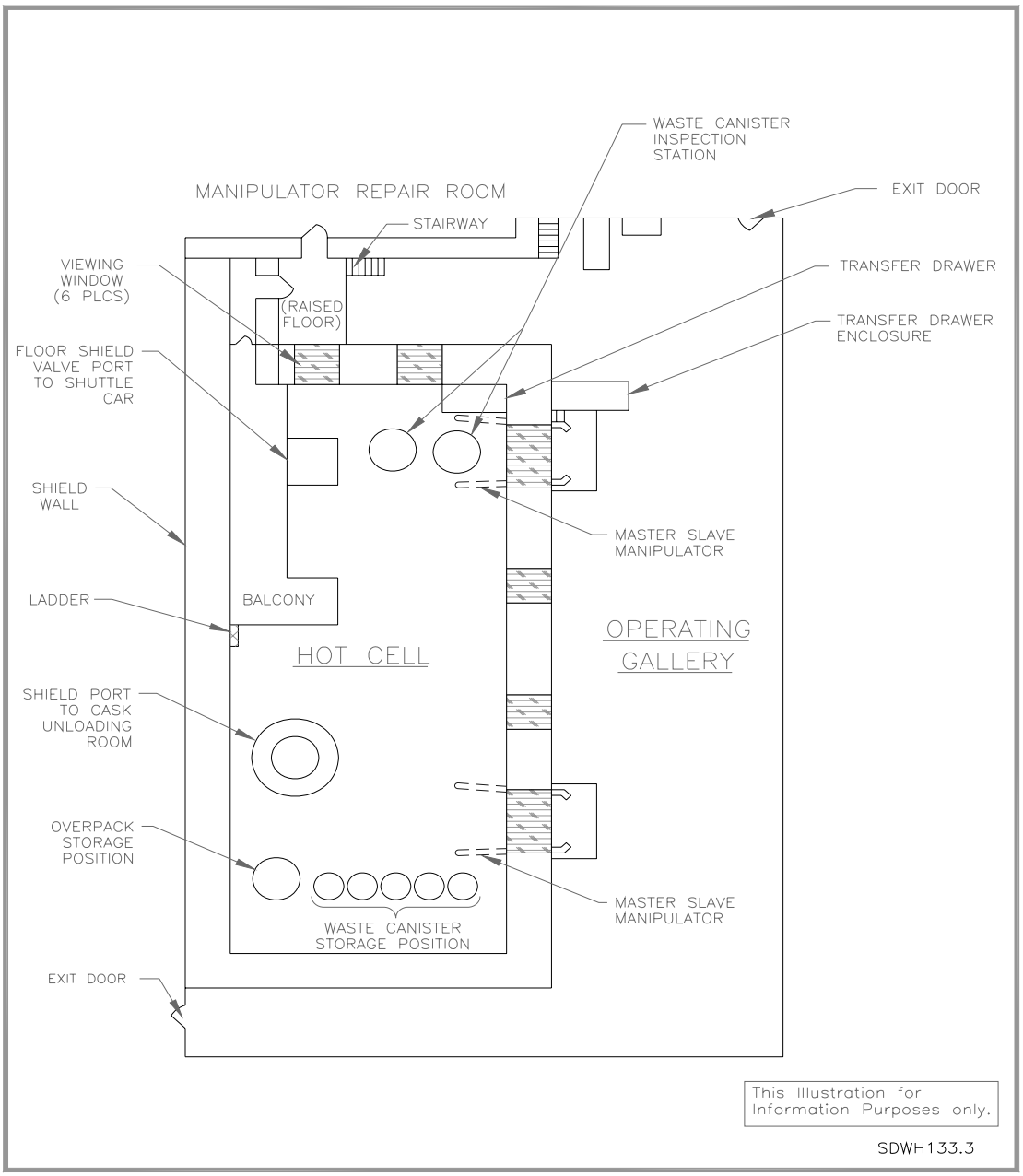

Figure WH II-II-36 – Hot Cell Floor Arrangement

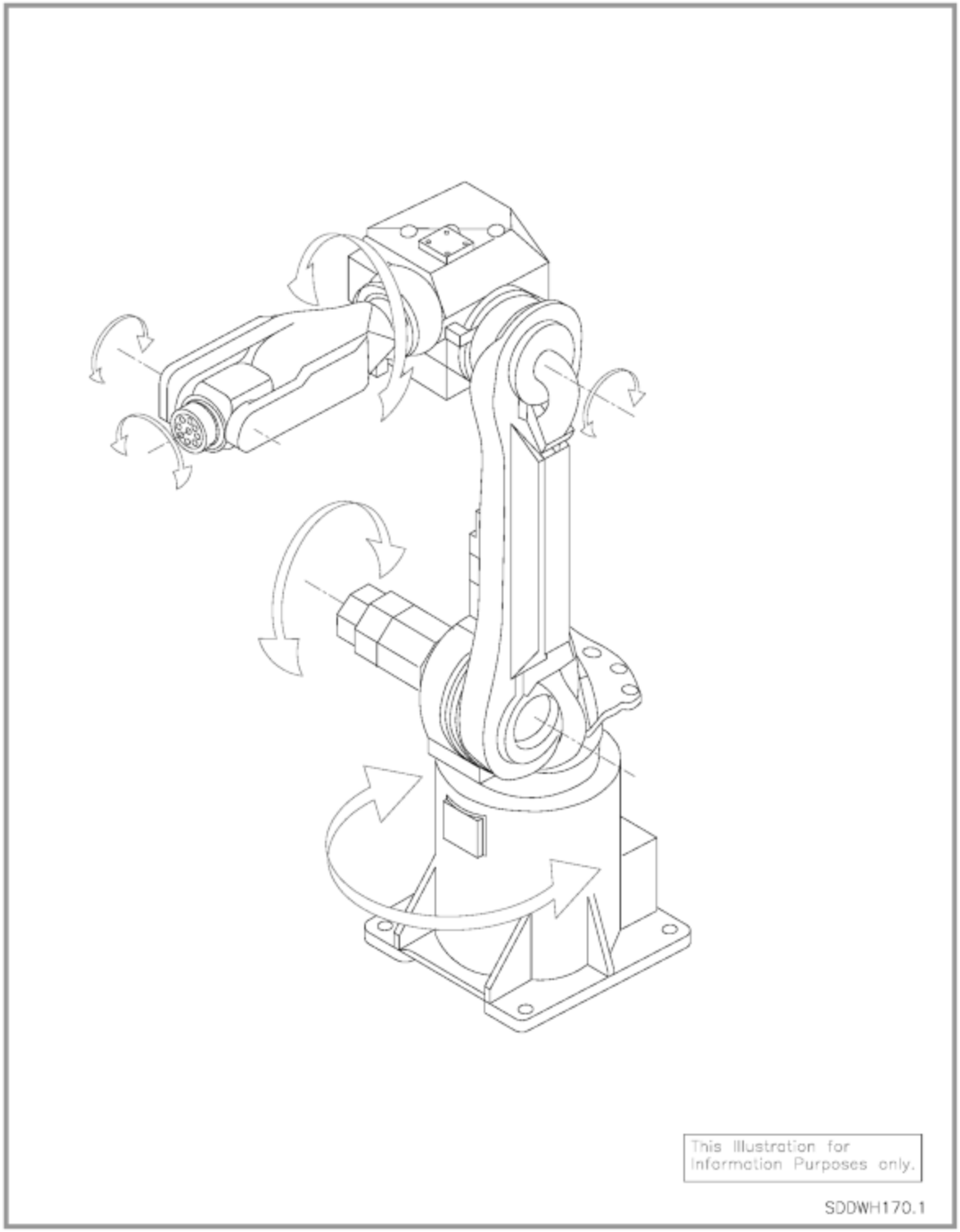

Figure WH II-II-37 – Swipe Robot

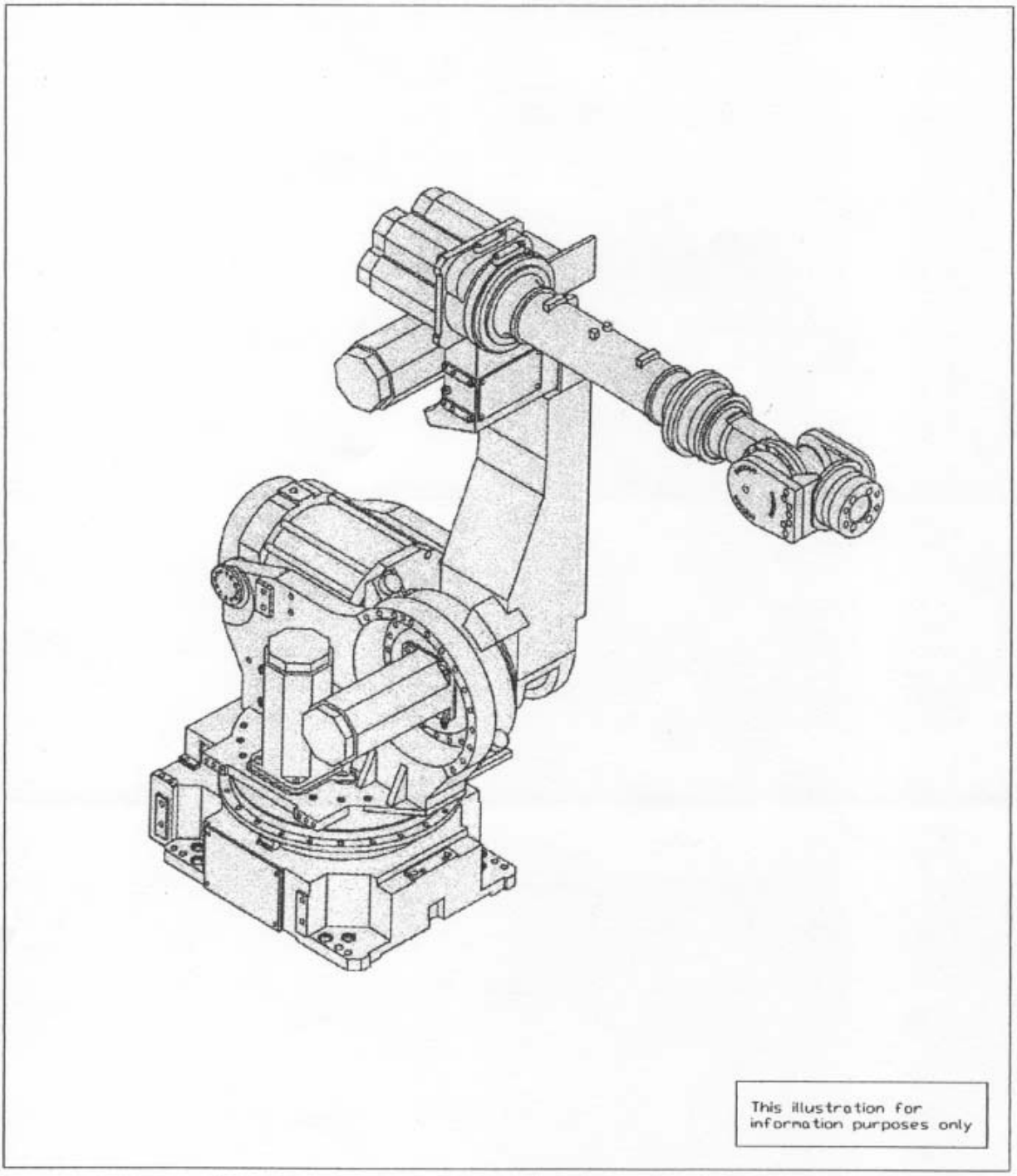

Figure WH II-II-38 – Detension Robot

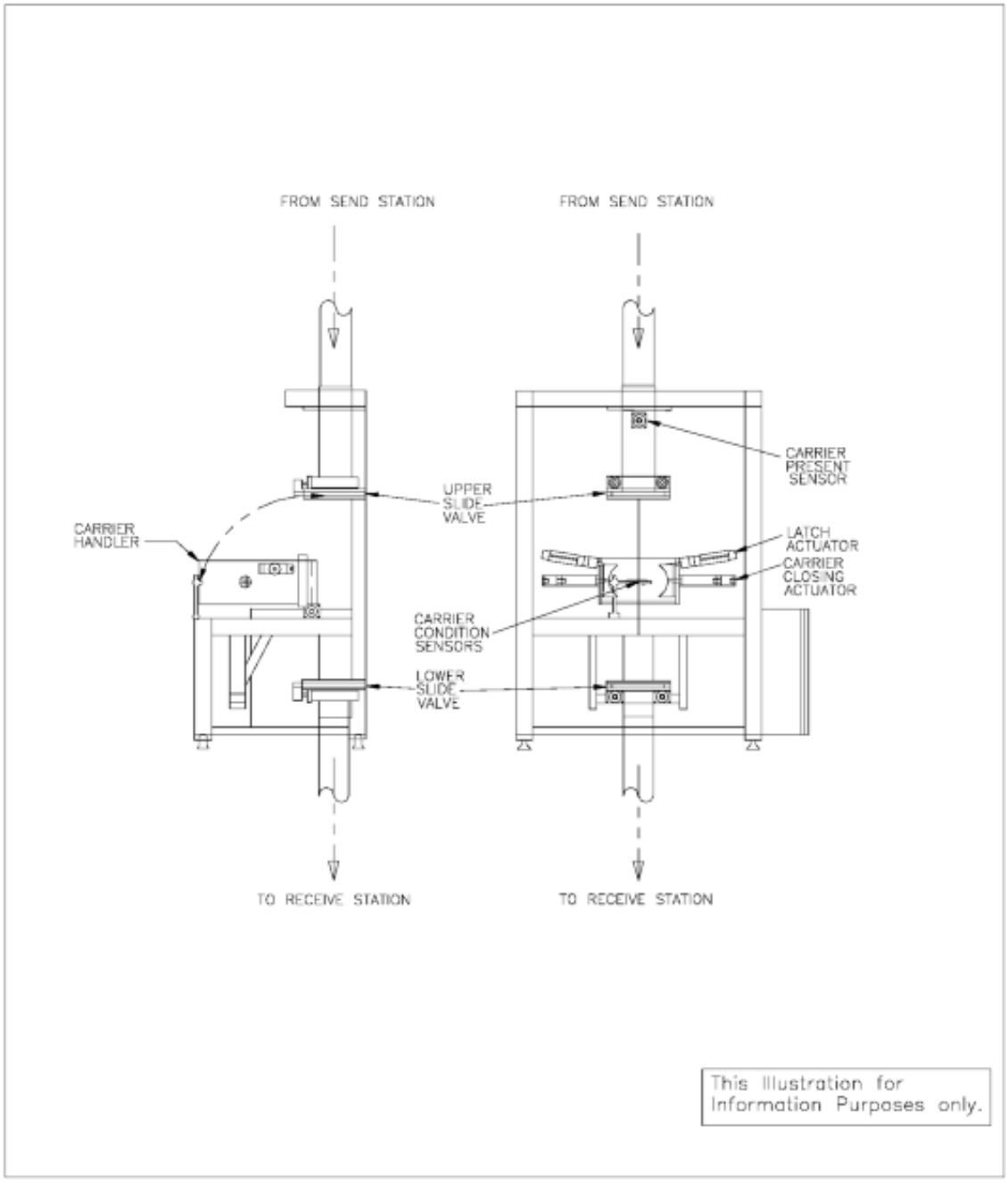

Figure WH II-II-39 – Auto Acceptor Tube (AAT)

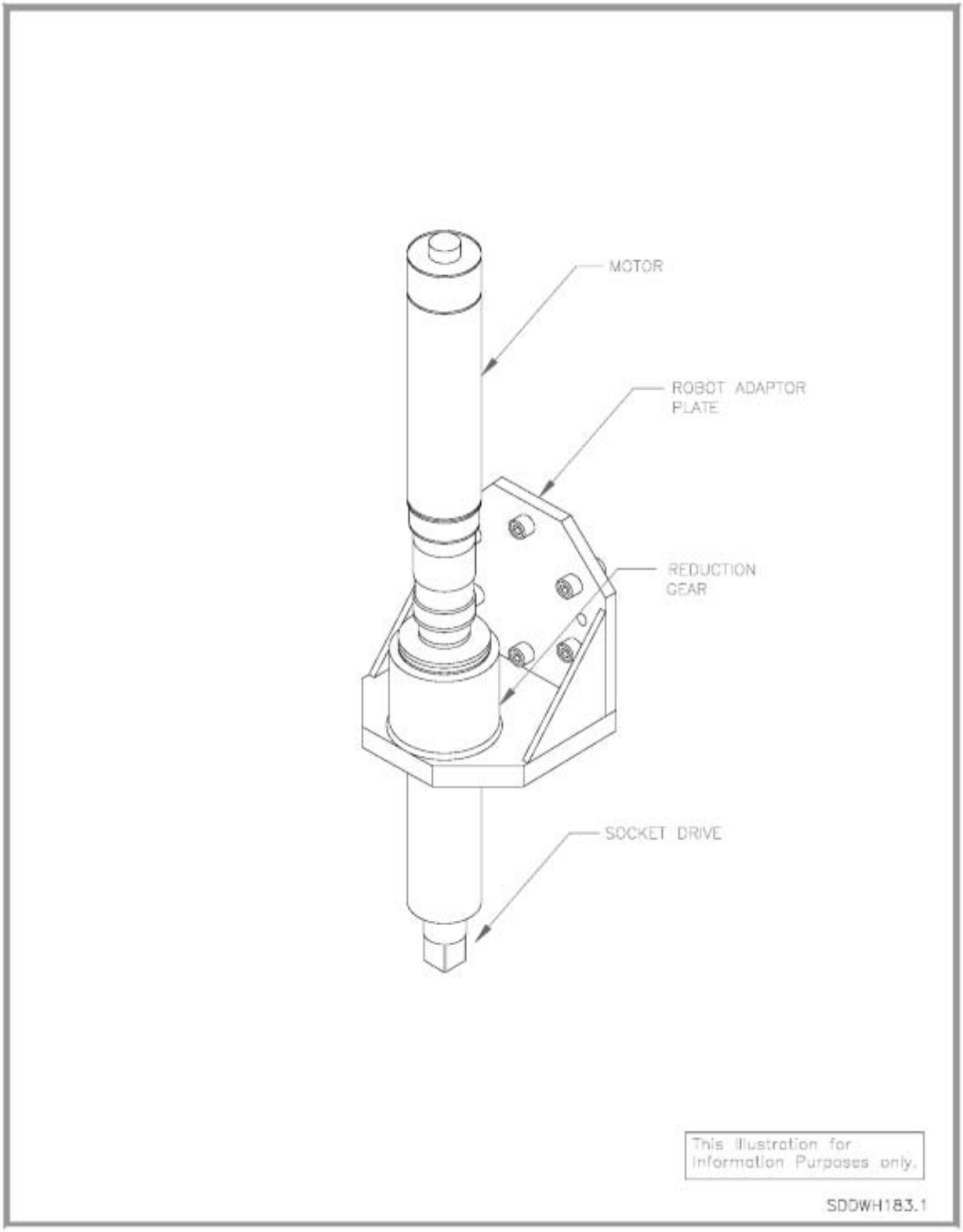

Figure WH II-II-40 – Detension Robot Nutrunner

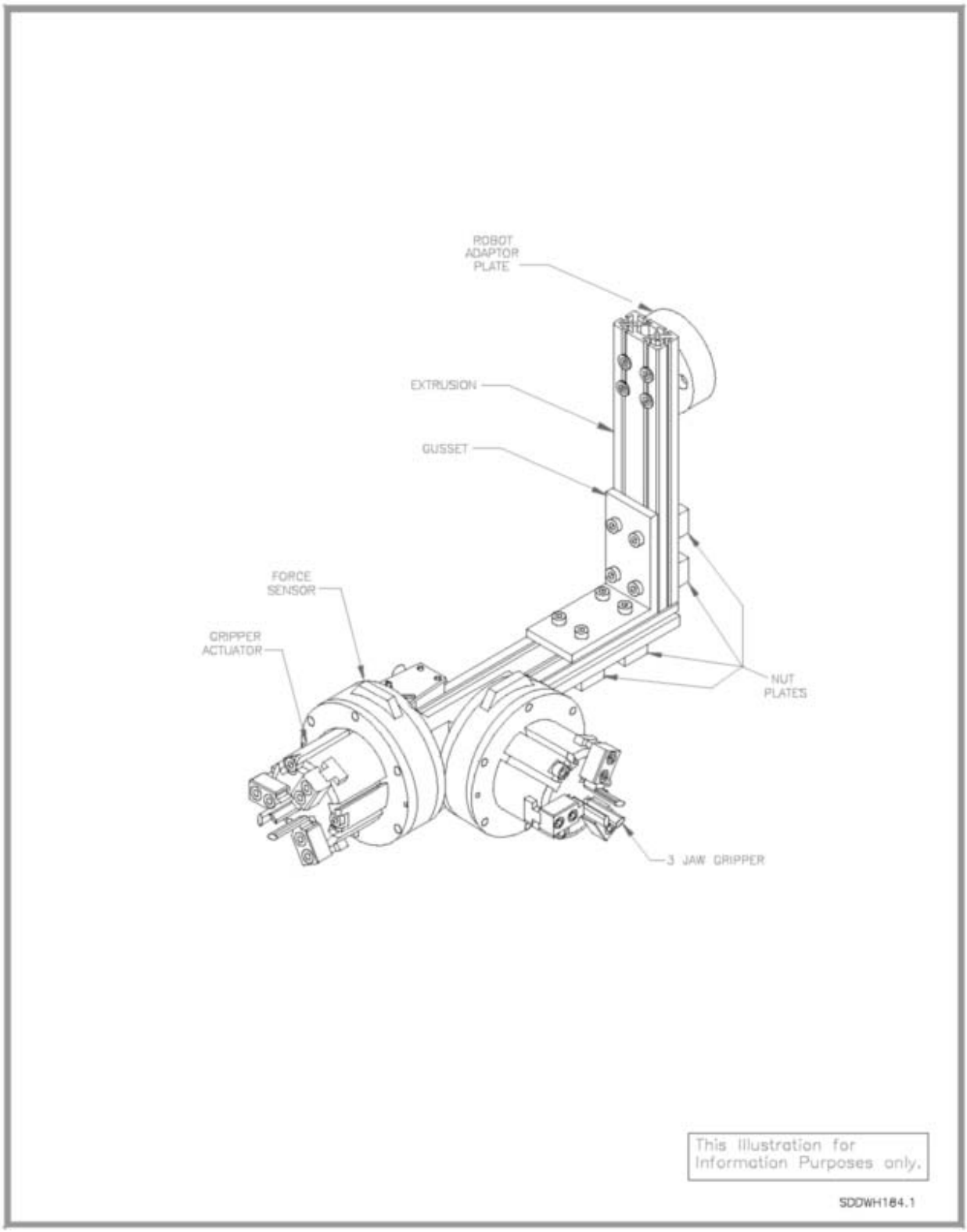

Figure WH II-II-41 – Swipe Robot End-of-Arm Tool

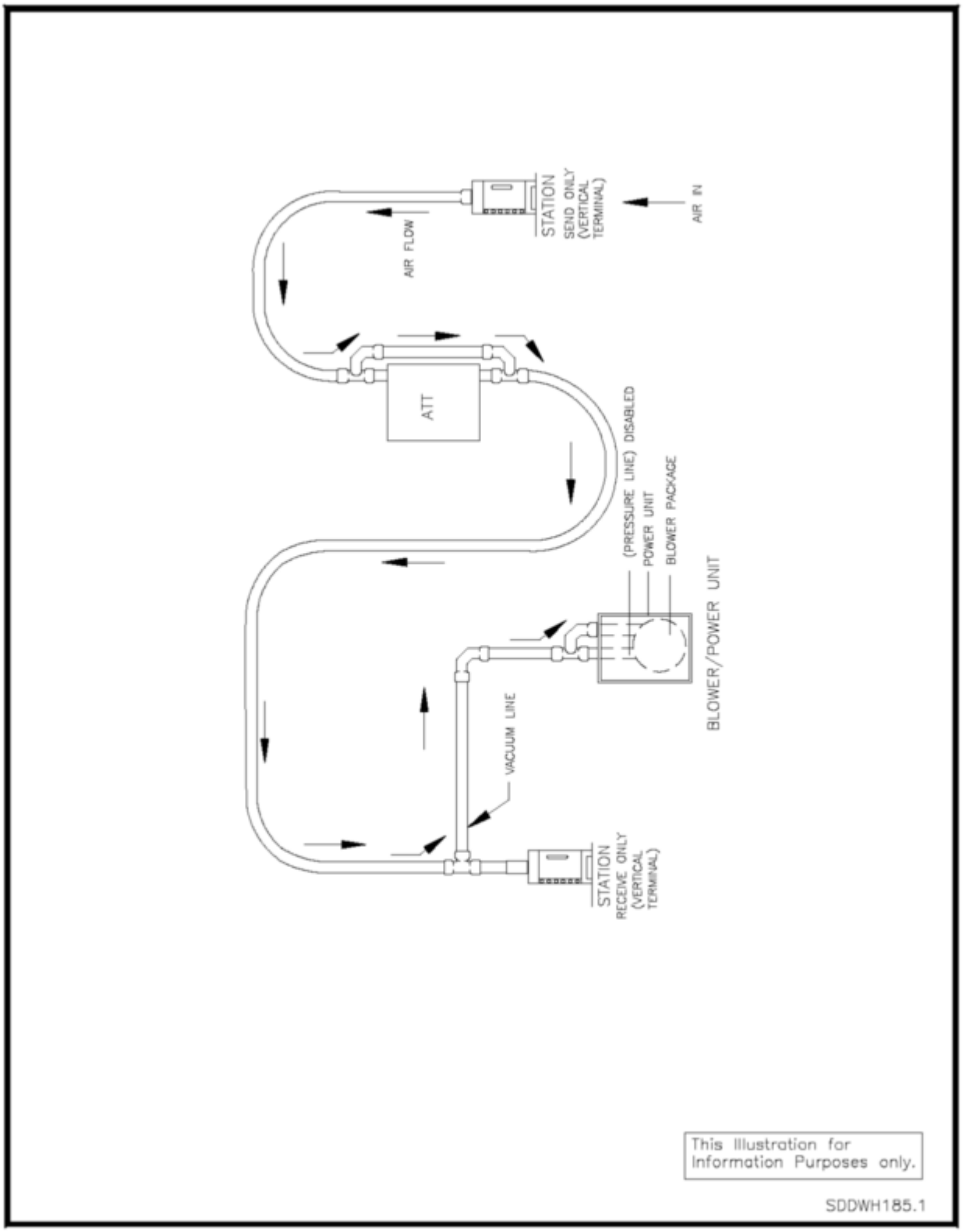

Figure WH II-II-42 – Swipe Delivery System

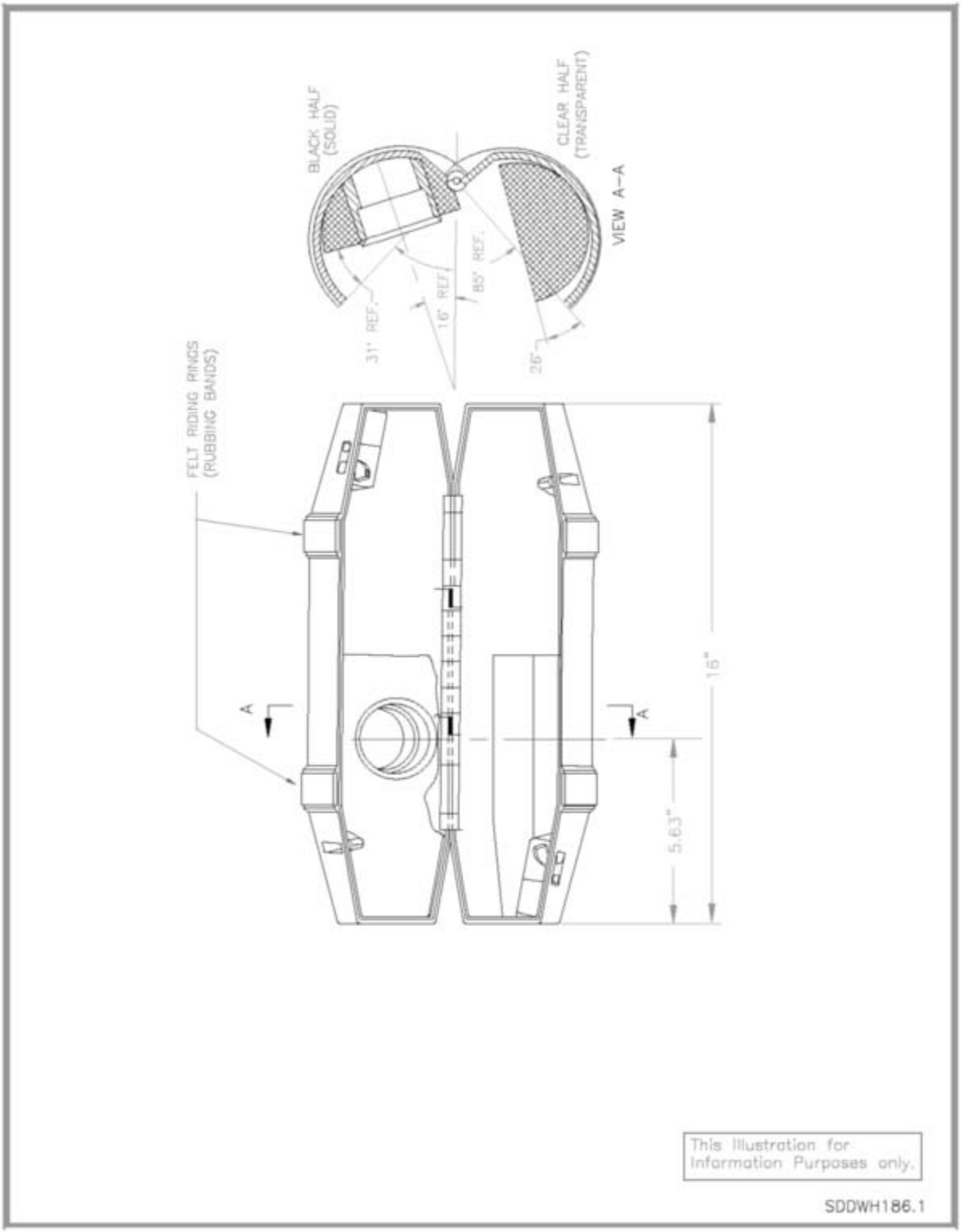

Figure WH II-II-43 – Swipe Carrier

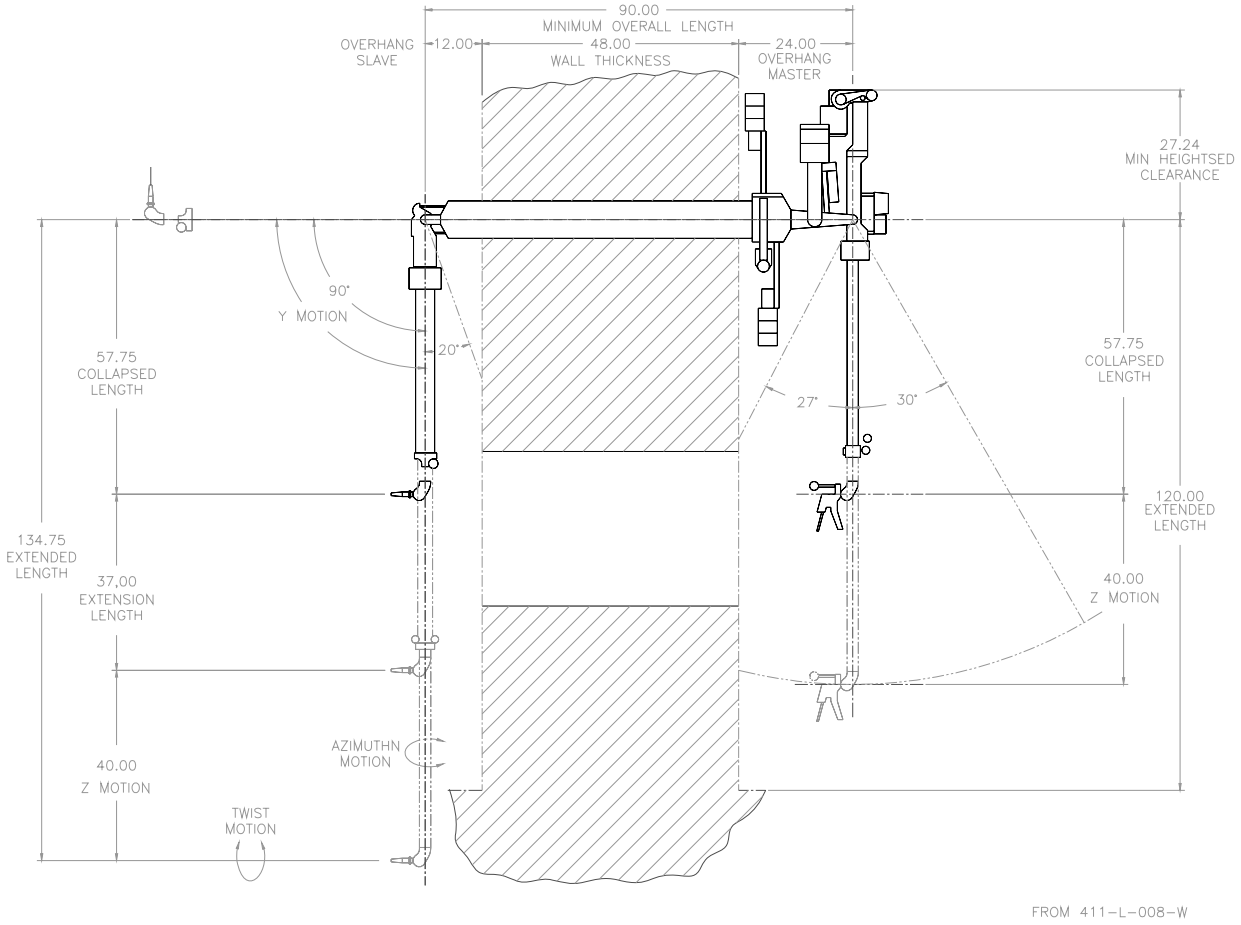

Figure WH II-II-44 – Master/Slave Manipulator

TABLE OF CONTENTS

APPENDICES

Appendix Description Page No.

STATEMENT OF INTENT.....1

APPENDIX A .....
REFERENCES. 2

APPENDIX B .....
ACRONYMS, ABBREVIATIONS, AND DEFINITIONS 3

APPENDIX C .....
EQUIPMENT LIST.....8

APPENDIX D .....
DRAWING REGISTER 9

APPENDIX E .....
LIST OF SDDs 10

APPENDICES

STATEMENT OF INTENT

---NOTICE---

The appendices that follow are for information only and thereby are not part of the Controlled document. Some of the information provided is controlled in various component indices and no attempt to duplicate these is intended here.

APPENDIX A

REFERENCES

Codes and Standards are referenced in Chapter G, Section 2.11.

APPENDIX B

ACRONYMS, ABBREVIATIONS, AND DEFINITIONS

ACRONYMS

AAT	Auto Acceptor Tube
ACGLF	Adjustable Center of Gravity Lift Fixture
CCTV	Closed Circuit Television
CFR	Code of Federal Regulations
CH	Contact Handling
CMR	Central Monitoring Room
CMS	Central Monitoring System
CTS	Canister Transfer System
DBE	Design Basis Earthquake
HEPA	High Efficiency Particle Air
hr	hour
ICV	Inner Containment Vessel of the TRUPACT-II Package or the 72B Road Cask
NRC	Nuclear Regulatory Commission
OC	Outer Containment of the 72B Road Cask
OCA	Outer Containment Assembly of the TRUPACT-II Package
OP&RR	Overpack and Repair Room
PLC	Programmable Logic Controller
RAF	Radiation Assessment Filter
RCB	Radiological Controlled Boundary
rem	roentgen equivalent man
RH	Remote Handling
RMA	Radioactive Materials Area
SDS	Swipe Delivery System
SWB	Standard Waste Box
SCC	Standard Cubic Centimeter
TDOP	Ten Drum Overpack
TRUPACT	Transuranic Package Transporter
TRUPACT-II	Transuranic Package Transporter Model II
TRU	Transuranic
VOC	Volatile Organic Compound

WAC	Waste Acceptance Criteria
WHB	Waste Handling Building
WIPP	Waste Isolation Pilot Plant

APPENDIX B

ACRONYMS, ABBREVIATIONS, AND DEFINITIONS

DEFINITIONS

canister	A container, usually cylindrical, for remote-handled waste, affords physical containment, but not shielding. Waste remains in its canister during and after burial.
cask	A shielded shipping container.
CH TRU	Contact Handled Transuranic waste is packaged TRU waste whose external surface dose rate does not exceed 200 mrem per hour.
CMS	Central Monitoring System. A computer system that monitors the WIPP facility instrumentation; operated from the Central Monitoring Room.
container	A disposable containment vessel for waste.
contamination	Undesirable radioactive material present on surfaces; can be either transferable or fixed.
DOE	The Department of Energy, of the U.S. Government, established in 1978 as a successor to ERDA and the AEC.
dose (radiation)	A general term indicating the amount of energy absorbed per unit mass from incident radiation.
emplacement	At the WIPP, the placing of radioactive wastes within a repository so as to safely confine them.
hot cell	A heavily shielded compartment in which highly radioactive material can be handled, generally by remote control.
lithostatic pressure	Subsurface pressure due to the weight of overlying rock or soil.
mrem	Unit of radiation exposure equal to one-thousandth of a roentgen equivalent man (rem).
NRC	Nuclear Regulatory Commission of the U.S. Government.

overpack (waste)	A container put around another container. In WIPP, overpacks would be used on damaged or otherwise contaminated drums and SWBs that it would not be practical to decontaminate.
pintle	A cylindrical flanged device on equipment or the end of an RH TRU waste canister used for grasping and lifting.
quality assurance	All those planned and systematic actions necessary to provide adequate confidence that a structure, system, or component will perform satisfactorily in service.
radioactivity	The emission of energetic particles and/or radiation during radioactive decay.
radioactive waste	Solid, liquid or gaseous material of negligible economic value waste that contains radionuclides in excess of threshold quantities.
radwaste	Radioactive waste.
rem	Roentgen Equivalent Man. The dosage of a radiation that will cause the same biological effect as one roentgen of x-rays or gamma rays in soft body tissue.
retrievable	Describes storage of radioactive waste in a manner designed for recovery without loss of control or release of radioactivity.
RH TRU waste	Remote Handled Transuranic Waste. Packaged TRU waste whose external surface dose rate exceeds 200 mrem per hour, but not greater than 1,000 rem per hour.
transuranic	Pertaining to elements with atomic number greater than 92, including, among others, neptunium, plutonium, americium, and curium.
TRUDOCK	A staging station where TRUPACT-IIs can be opened, unloaded, cleaned, and reassembled for reuse.
TRUPACT-II	TRansUranic PACkage Transporter, Model II. A shipping container designed to meet all DOE and DOT requirements of shipping CH TRU to WIPP and to provide the protection specified in NRC regulations.
TRU waste	Transuranic Waste. Without regard to source or form, waste that is contaminated with alpha-emitting

	transuranium radionuclides with a half life greater than 20 years and concentration greater than 100 nCi/g at the time of assay. Heads of field organizations can determine that other alpha contaminated waste, peculiar to a specific site, must be managed as TRU waste.
TRU mixed waste	TRU waste that is co-contaminated with hazardous constituents as identified in ZONMAC 4.1 Subpart II (40 CFR 261), Subparts C and D.
volatile organic compounds	Compounds containing carbon and having vapor pressures above 10^{-1} mm Hg at standard conditions (20°C and 760 mm Hg).

APPENDIX C

EQUIPMENT LIST

For a list of the equipment for the waste handling system (WH01, WH02), WH03, WH04, and WH05), see the WIPP equipment register, which is maintained by Configuration Management & Startup. The list is regularly updated with the latest information.

APPENDIX D

DRAWING REGISTER

For a list of drawings for the waste handling system (WH01, WH02), WH03, WH04, and WH05), see the drawing register, which is maintained by the Engineering File Room. The register is regularly updated with the latest information.

APPENDIX E

LIST OF SDDs

SDD NO.	TITLE
AU00	Underground Facilities and Equipment
CA00	Compressed Air System
CF00	Plant Buildings, Facilities, and Miscellaneous Equipment
CM00	Plant Monitoring and communications System
ED00	Electrical System (Surface and Underground)
EM00	Environmental and Process Monitoring System
FP00	Fire Protection System
HV00	Heating, Ventilation and Air Conditioning System
PP00	Plant Protection System
PT00	Packaging and Transportation System
RM00	Radiation Monitoring System
UH00	Underground Hoist System
VU00	Underground Ventilation System
WD00	Water Distribution System
WH00	Waste Handing System

PLANT DESIGN REQUIREMENT DOCUMENT	
GPDD	General Plant Design Description