Working Copy

SDD:	UH00
Revision Number:	8
Revision Date:	June 24, 2009

U.S. DEPARTMENT OF ENERGY
WASTE ISOLATION PILOT PLANT

UNDERGROUND HOISTING SYSTEM DESIGN DESCRIPTION

SDD - UH00

Prepared by
Washington TRU Solutions
Carlsbad, New Mexico

For

U. S. Department of Energy

N. Siepel	Approval On File	04/30/09
Cognizant Engineer (Printed)	Signature	Date
Stan Patchet	Approval On File	04/30/09
Cognizant Manager (Printed)	Signature	Date

Working Copy

TABLE OF CONTENTS

SDD UH00, Underground Hoist System

TITLE PAGE I

TABLE OF CONTENTS ii

LIST OF FIGURES iii

CHANGE HISTORY vi

SUMMARY S-1

Subsystem Chapter

Chapter G.....G. UH00

Subsystem UH02, Air Intake Shaft Hoist . . . . . Chapter I

Subsystem UH03, Air Intake Shaft . . . . . Chapter I

Subsystem UH04, Salt Handling Hoist . . . . . Chapter II

Subsystem UH05, Salt Handling Shaft . . . . . Chapter II

Subsystem UH06, Waste Hoist . . . . . Chapter III

Subsystem UH07, Waste Shaft . . . . . Chapter III

Subsystem UH08, Exhaust Shaft . . . . . Chapter IV

Appendices . . . . . Appendices V

Working Copy

LIST OF FIGURES

Figure Page

FIGURE S-1 WIPP Surface Plot Plan - UH00 Facilities S-2

FIGURE S-2 Organization of the SDD UH00 . . . . . S-3

Working Copy

TABLE OF CONTENTS
CHANGE HISTORY

REV. NO.	DATE	PAGE/Chapter AFFECTED	APPROVED BY
0	11/91	Chapters 1.0, 2.0, 3.0, & 3.3	ECP 1-UH91-169 ECO NO. 5823
1	09/93	Revised Sect.1.0, 2.0, 3.3, & App Added Sect. 3.0, 4.0, 5.0, 6.0, 7.0	ECP 1-UH91-169 ECO NO. 6850
1	11/95	Page(s) Chapter(s) 3-18 Fig. 3.2.4-1 3-22 3.2.4.2.4 3-101 3.5.4.6, 3.5.4.6.1 7-18 7.2.4.6 7-83,84 7.3.4.6 7-96 Table 7.3.4-1 3-94 Fig. 3.5.4-2 3-96 3.5.4.1.14 3-97 Fig. 3.5.4-3 2-53 2.8.6.3.15,16,17,18,19 2-54 2.8.6.5 3-110 Fig. 3.5.6-1 3-114 Fig. 3.5.6-3 3-163 Table 3.6.6-1 3-170 3.6.6.1.16,17,18 3-172 3.6.6.5.2 4-17 4.4.1.2.9 5-14 Table 5.4.2-1 3-43 3.2.6.2.12 7-27 7.2.6.11 7-126,127 7.3.6.11 7-153 Table 7.3.6-1 5-10 Table 5.3.2.1 3-83 Fig. 3.5.2-1 3-88 Fig. 3.5.2-3	ECP 2-UH93-086 ECO NO. 6776 ECP 2-PC93-066 ECO NO. 7024 ECP 1-UH93-084 ECO NO. 7437 ECP 1-UH94-104 ECO NO. 7445 ECP 2-UH95-008 ECO NO. 7582 ECO NO. 7248 ADD. #1
2	03/96	All Chapters (Note 1)	ECP 2-UH95-063 ECO NO. 7955 ECO NO. 8178
2	09/97	Page(s) Chapter(s) 5-59,60, & 61 Table 3.6.6-1 5-39 Figure 3.5.6-2	ECP 2-UH96-075 ECO NO. 8495 ECO NO. 8466
3	05/98		ECO NO. 8411 ECO NO. 8794 ECO NO. 8907 ECO NO. 8864 ECO NO. 9075
3	09/98	Page(s) Chapter(s) III-32 3.6.4.4.19 III-58 Figure UHIII-12 IV-60 Figure UHIV-9	ECO NO. 9137 ECP 1-UH94-104 ECO NO. 7445 ADD. #2

Working Copy

REV. NO.	DATE	PAGE/Chapter AFFECTED	APPROVED BY
4	06/01	All sections (format changes) Section III Table UH III-2 Figure UHIII-12 Figure UHIII-16 Section III Table UH III-1 Figure UHIII-11 Figure UHIII-15 Section IV Table UH IV-1 Figure UH IV-7 Figure UH IV-8 Figure UH IV-9 Section IV Table UH IV-1	 ECO #9697 ECO #9697 Add. ECO #9166 ECO 9235 ECO 9665
5	11/01	All sections	ECO 10026
6	03/02	Section IV Figure UHIV-8 Figure UHIV-9	ECO 9776
7	01/06	Chapter G Section 2.0	ECO 11320
8	06/09	Section III 2.3.1.1, 3.2.1.2.4	ECO 12221

NOTE 1. Chapter 1 contains the General Requirements that apply for all hoists and shafts of the U/G Hoisting Systems. The seven sub-systems of SDD UH00 have been consolidated into four Chapters (Chapters 2 through 4). Shaft requirements are included with the associated hoist requirements (i.e.; Air Intake shaft with Air Intake hoist, Waste Handling shaft with Waste Handling hoist, etc.). Paragraph numbers are the same as previous revisions to maintain continuity and to reduce duplication.

Working Copy

SUMMARY

The hoist system provides the vertical shafts and hoists that connect the underground storage horizon with the surface facilities. The system provides inlets and outlets for the underground ventilation system; a path for communications, electrical, instrumentation, compressed air and water conduits; and a method for moving personnel, equipment and material between the underground and surface facilities.

The system consists of four shafts, three installed hoists, and a galloway. Each shaft and hoist are defined to be a separate subsystem. The UH00 Subsystems are identified as follows:

- Subsystem UH02, Air Intake Shaft Hoist (Chapter I)
- Subsystem UH03, Air Intake Shaft (Chapter I)
- Subsystem UH04, Salt Handling Hoist (Chapter II)
- Subsystem UH05, Salt Handling Shaft (Chapter II)
- Subsystem UH06, Waste Hoist (Chapter III)
- Subsystem UH07, Waste Shaft (Chapter III)
- Subsystem UH08, Exhaust Shaft (Chapter IV)

All subsystems together make up the WIPP hoist system which is presented on the site layout schematic, Figure S-1. The structure of this SDD UH00 relative to the seven subsystems, general requirements, and the referenced appendices is illustrated in Figure S-2.

Working Copy

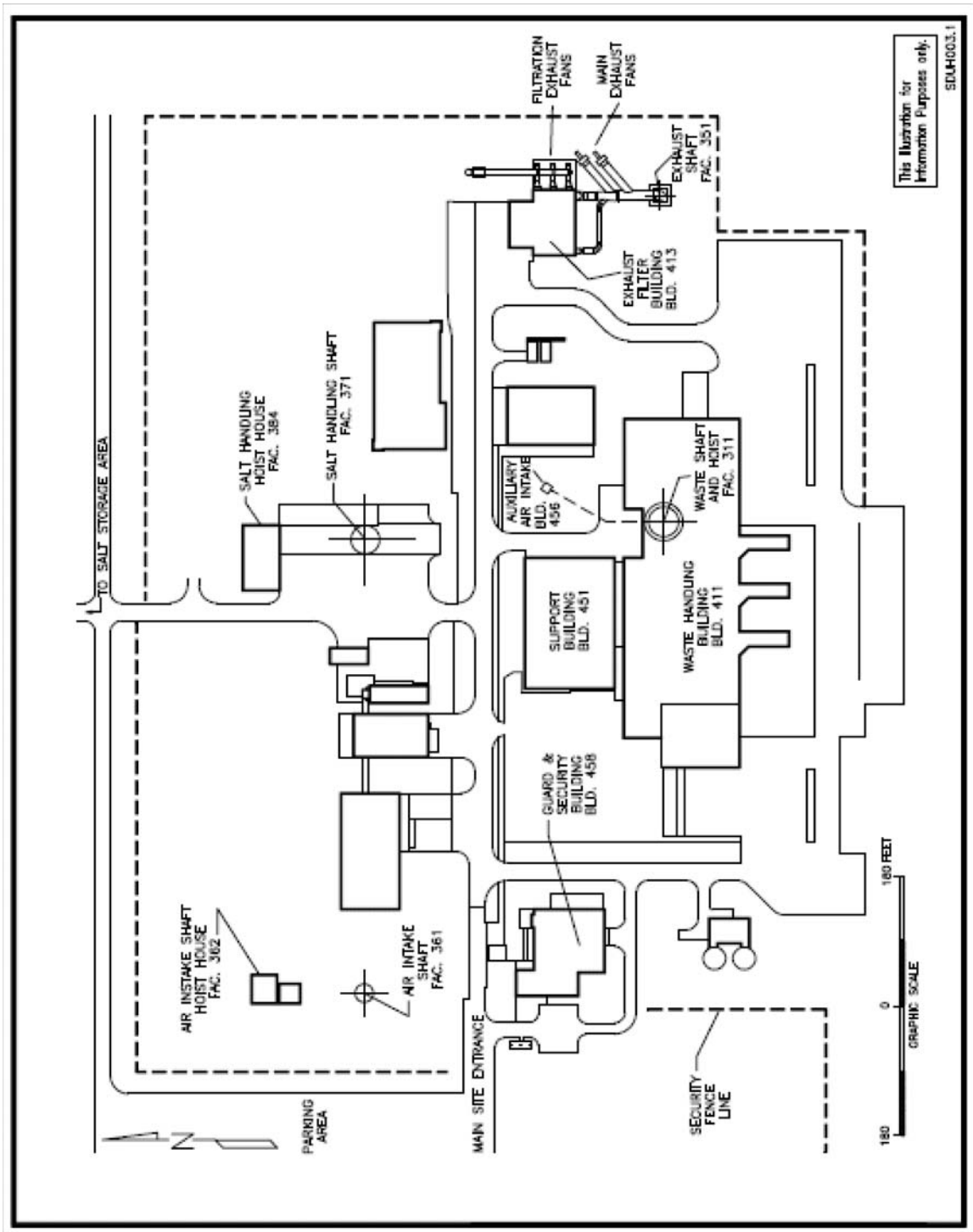

FIGURE S-1 WIPP Surface Plot Plan - UH00 Facilities

Working Copy

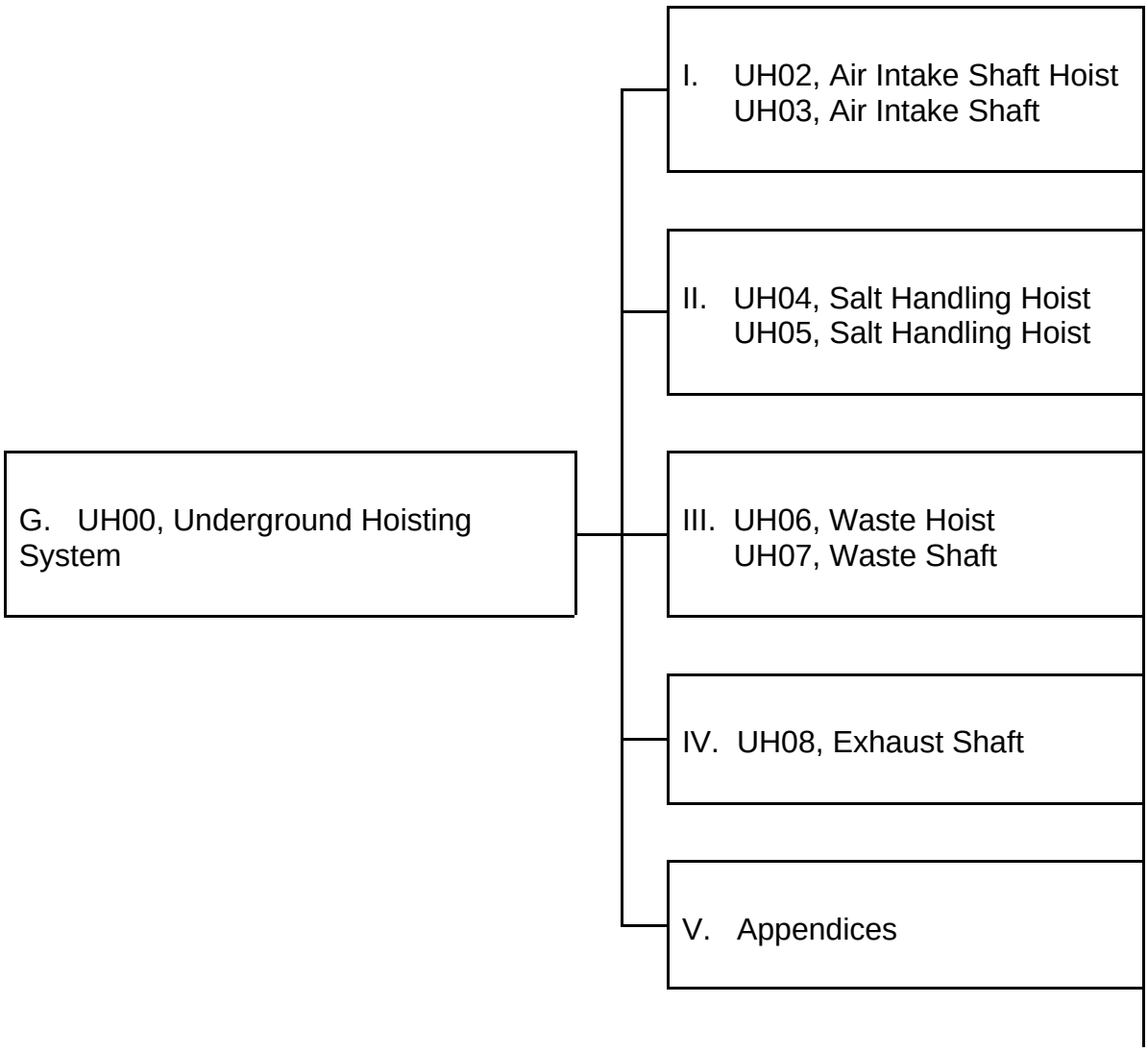

FIGURE S-2 Organization of the SDD UH00

Working Copy

Chapter G
Underground Hoisting Systems General Requirements

Table of Contents

1.0 PRIMARY FUNCTIONS G-4

1.1 UH02 Air Intake Shaft Hoist (Chapter I)* G-4

1.2 UH03 Air Intake Shaft (Chapter I)* G-4

1.3 UH04 Salt Handling Hoist (Chapter II)* G-4

1.4 UH05 Salt Handling Shaft (Chapter II)* G-4

1.5 UH06 Waste Hoist (Chapter III)* G-4

1.6 UH07 Waste Shaft (Chapter III)* G-4

1.7 UH08 Exhaust Shaft (Chapter IV)* G-4

2.0 DESIGN REQUIREMENTS G-6

2.1 General Requirements (All Shafts and Hoists) G-6

2.2 Subsystem General Requirements G-10

2.3 Operational Requirements G-11

2.4 Structural Requirements G-12

2.5 General Arrangements and Essential Features G-13

2.6 Maintenance Requirements G-13

2.7 In-Service Inspections G-14

2.8 Instrumentation and Control Requirements G-16

2.9 Interfacing System Requirements G-16

2.10 Quality Assurance Requirements G-19

2.11 Codes and Standards Requirements G-20

Working Copy

2.12 Reliability Assurance Requirements G-20

3.0 DESIGN DESCRIPTION G-21

3.1 Summary, Underground Hoisting System (All Hoists & Shafts) G-21

3.2 Detail System Description G-21

3.3 System Performance Characteristics G-22

3.4 System Arrangement G-22

3.5 Component Design Description G-22

3.6 Instrumentation and Control Information G-23

3.7 System Interfaces(All Hoists & Shafts) G-23

4.0 OPERATIONS - ALL HOISTS G-24

4.1 [UH02] AIS Hoist, and the Galloway (Chapter I) G-24

4.2 [UH04] Salt Hoist & Handling Equipment (Chapter II) G-24

4.3 [UH06] Waste Hoist (Chapter III) G-24

5.0 SYSTEM LIMITATIONS, SETPOINTS, AND PRECAUTIONS - All Hoists . G-24

5.1 [UH02] AIS Hoist System (Chapter I) G-24

5.2 [UH04] Salt Hoist System (Chapter II) G-24

5.3 [UH06] Waste Hoist System (Chapter III) G-24

6.0 OFF-NORMAL EVENTS AND RECOVERY - All Hoists G-25

6.1 [UH02] AIS Hoist and Galloway (Chapter I) G-25

6.2 [UH04] Salt Hoist (Chapter II) G-25

6.3 [UH06] Waste Hoist (Chapter III) G-25

7.0 MAINTENANCE - All Hoists & Shafts G-25

7.1 Maintenance Approach (All Hoists & Shafts) G-25

7.2 Corrective Maintenance (All Hoists & Shafts) G-27

Working Copy

7.3 Preventive Maintenance (All Hoists & Shafts) G-27

7.4 In-Service Inspection and Predictive Maintenance (All Hoists & Shafts) . . . G-29

Working Copy

Chapter G
Underground Hoisting Systems General Requirements

1.0 PRIMARY FUNCTIONS

The hoist system consists of a number of subsystems which provide egress and ingress of personnel, materials and essential services to the underground storage horizon. The primary functions of each subsystem collectively represent the total system functions. See Figure 1.1-1.

1.1 UH02 Air Intake Shaft Hoist (Chapter I)*

1.2 UH03 Air Intake Shaft (Chapter I)*

1.3 UH04 Salt Handling Hoist (Chapter II)*

1.4 UH05 Salt Handling Shaft (Chapter II)*

1.5 UH06 Waste Hoist (Chapter III)*

1.6 UH07 Waste Shaft (Chapter III)*

1.7 UH08 Exhaust Shaft (Chapter IV)*

* The seven sub-systems of SDD UH00 have been consolidated into four chapters (Chapter II through Chapter IV). Shaft requirements are included with the associated hoist requirements (i.e.; Air Intake shaft with Air Intake hoist, Waste Handling shaft with waste Handling hoist, etc.). Paragraph numbers are the same as previous revisions to maintain continuity and to reduce duplication.

Chapter G contains the General Requirements that apply for all hoists and shafts of the U/G Hoisting Systems. Chapter VI presents the referenced appendices.

UH00 FUNCTIONAL BLOCK DIAGRAM

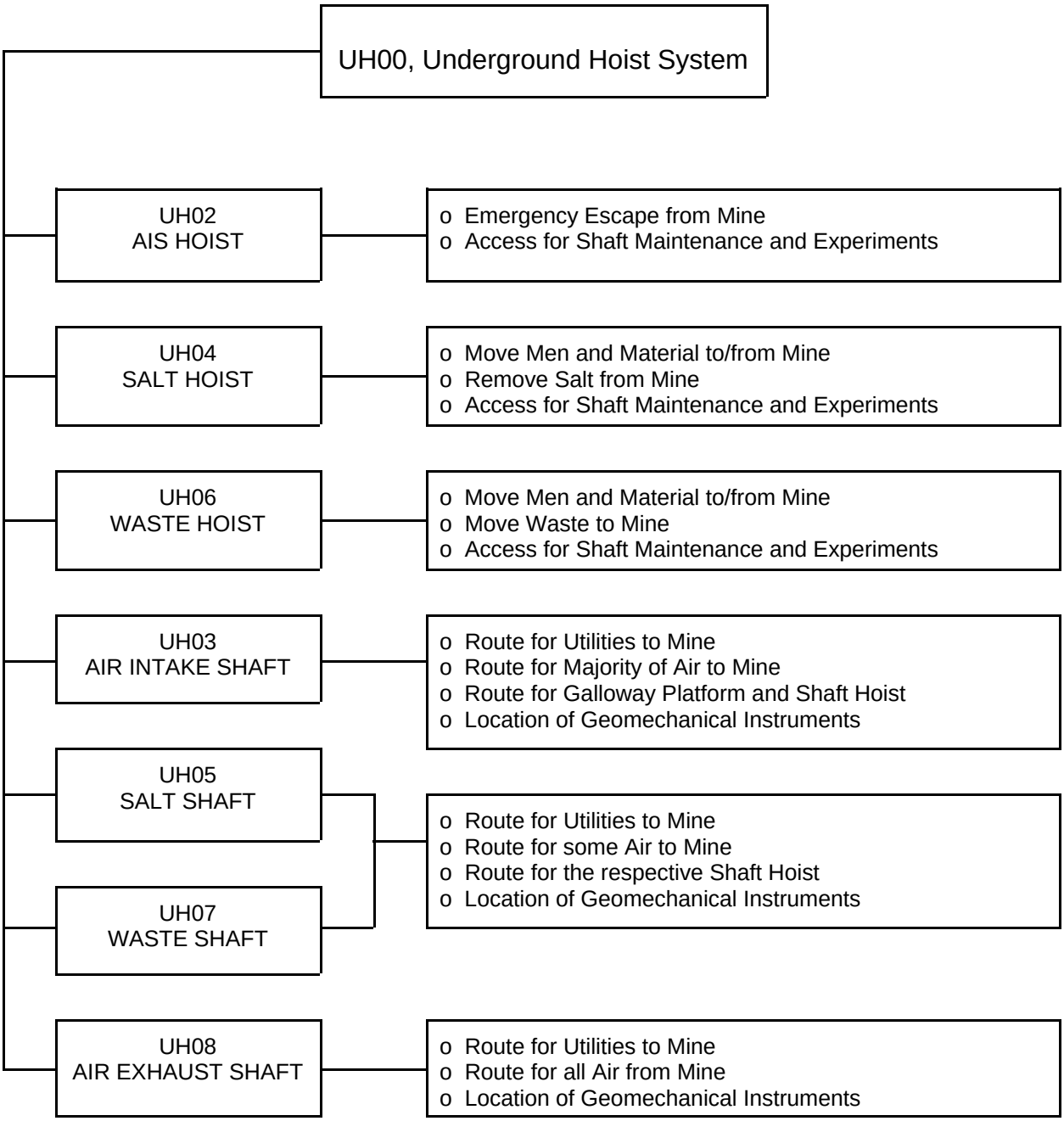

Working Copy

2.0 DESIGN REQUIREMENTS

The functional classifications are defined in the Documented Safety Analysis (DSA) and the General Plant Design Description (GPDD).

2.1 General Requirements (All Shafts and Hoists)

The system and its modifications shall meet the design requirements of the revision of DOE Orders 420.1A and 430.1 in effect at the time the design or design change was approved. (Reference SDD GPDD).

2.1.1 System Configuration and Requirements

2.1.1.1 This system shall provide four independent vertical shafts that extend from the surface to the underground storage horizon. Three of the shafts shall have permanently installed hoists capable of moving personnel, equipment and materials between the surface and the working level. The Waste Handling Shaft shall have a tunnel connecting the shaft to a ventilation building outside the Waste Handling Building to prevent exceeding design vacuum conditions in the Waste Handling Building.

2.1.1.2 The Air Intake Shaft (UH03) shall be the primary source of downflow fresh air needed to ventilate the mine. This shaft shall be the primary emergency exit for personnel from the mine when the normal exits are not available. The shaft shall be located on the west side of the site.

2.1.1.3 The Air Intake Shaft shall have a double winch system (UH02) with a multi-deck platform (Galloway) for shaft maintenance, and a single hoist cage (Shaft Conveyance) to move personnel or materials in the shaft, generally to and from the Galloway.

2.1.1.4 The Salt Handling Shaft (UH05) shall be the primary path for moving personnel between the surface and underground, and for removing salt from the mine. This shaft shall be a secondary source of downflow fresh air to the mine.

2.1.1.5 The Salt Handling Shaft shall have a hoist system (UH04) with a two section shaft conveyance.

2.1.1.6 The Waste Handling shaft (UH07) shall be the primary path for moving waste containers and canisters and waste handling equipment between the Waste Handling Building (WHB) and the underground storage horizon. This shaft shall have a downflow of air from the WHB which ventilates the Waste Handling Station at the base of the shaft and the Waste Handling Shaft.

Working Copy

2.1.1.7 The Waste Shaft shall have a hoist system (UH06) with a large platform area to move waste containers and canisters and waste handling equipment and supplies to the underground horizon, and a removable deck above the platform that can be used to transport personnel.

2.1.1.8 The Exhaust Shaft (UH08) shall be the only upflow path to remove air from the mine. This shaft shall not normally be accessible to personnel.

2.1.1.9 The Underground Hoisting System equipment shall be capable of continuous operation in the following range of ambient conditions:

SURFACE

Environmental Condition	Range
Altitude	3000ft to 4000ft
Temperature Extreme	-17° F to 120° F
Relative Humidity	1% to 99%
Airborne Dust (salt)	up to 0.02g/m3
Wind Velocity	up to 110 mph
Precipitation Average Annual	12 in
24 hour maximum	6 in

UNDERGROUND

Environmental Condition	Range
Altitude	1000ft to 2000ft
Temperature Extremes	35° F to 110° F
Relative Humidity	0% to 20%
Airborne Dust (salt)	up to 0.02g/m^3
Wind Velocity	up to 20 mph

2.1.2 Shaft Requirements

2.1.2.1 Shaft landings shall be equipped with substantial safety gates so constructed that materials will not go through or under them.

2.1.2.2 Safety gates shall be kept closed except when loading or unloading the shaft conveyance.

2.1.2.3 Shaft stations shall have suitable clearance to allow the safe movement of personnel, equipment and materials in the area.

2.1.2.4 Substantial platforms equipped with overhead protection shall be provided for shaft inspection and repair work.

2.1.2.5 The design operating life is 25 years.

Working Copy

2.1.2.6 Design Loading and Factor Considerations. All references below are located in Appendix A.

2.1.2.6.1 For basis of soil and other geologic loads, see the Soils Design Report (Reference 1) and the Geologic Design Information Report (Reference 2).

2.1.2.6.2 No lateral rock pressure is to be used in the design of the concrete lining.

2.1.2.6.3 The lining shall be designed for a hydrostatic pressure starting at about 250 feet below the ground surface and extending to the rock-salt interface at the top of the key. The water pressure is considered to increase at 0.437 psi for each foot of depth. (Reference 4)

2.1.2.6.4 The key shall be designed to resist the lateral pressure generated by salt creep. The design lateral pressure shall be equal to 65% of the total vertical pressure due to soil, rock and salt overburden. (Reference 5 & 6)

2.1.2.6.5 The seismic load shall be calculated based on the Seismic Evaluation Report of Underground Facilities. (Reference 3)

2.1.2.6.6 A load factor of 1.7 shall be applied to the design loadings used for the concrete key and a load factor of 1.4 shall be applied to the design loadings used for the concrete lining. Concrete compressive strength shall be 5000 psi or greater.

2.1.2.6.7 Allowable stresses for combined static and seismic loadings shall be increased by 33% per GC00 (General Civil & Structures SDD) Design Basis Structural (General), contained in CF00 (Confinement Facilities SDD).

2.1.2.7 Any overexcavation behind the concrete liner during the construction phase shall be grouted to preclude deterioration of the dolomite and mudstone in the aquifer zones.

2.1.2.8 A shaft key shall be provided that is a reinforced concrete ring which serves as the transitional element between the lined and the unlined sections of the shafts. The key shall be designed to retain the rock formation and will be provided with chemical seal rings and a water collection ring with drains to prevent water from flowing down the unlined shaft from the lining above.

2.1.2.9 Seismic loads do not control in the shaft design when allowable stresses for combined static and seismic loads are increased by 33 percent, as established by GC00 Design Basis Structural (General).

2.1.3 Hoist Requirements

2.1.3.1 All permanently installed hoists used to transport personnel shall meet the requirements of 30 CFR 57 Subpart R.

Working Copy

2.1.3.2 All permanently installed hoists, headframes, and cable drives shall be securely anchored to support all dead loads, live loads, and wind loads.

2.1.3.3 Belts, ropes, or chains shall not be used as power transmission devices in permanently installed hoist driving mechanisms.

2.1.3.4 All hoists shall have two independent brake systems each of which shall be capable of holding the fully loaded shaft conveyance at any point in the shaft.

2.1.3.5 All hoists shall be configured such that the brakes are automatically applied upon loss of power.

2.1.3.6 All hoists shall have devices to prevent overtravel, and overspeed. If overtravel bypass switches are used, they shall be spring loaded so as to require the hoist operator to hold the switch closed while the conveyance is moved through the overtravel position. They shall return automatically to the safe position when released.

2.1.3.7 All hoists shall have a manually operable "emergency stop" switch that will initiate emergency braking action and stop the conveyance. This switch shall be located within reach of the hoist operator.

2.1.3.8 All permanently installed hoist controls shall be placed or housed so that machinery noise will not prevent the hoist operator from hearing the control signals.

2.1.3.9 An accurate and reliable indicator of the position of the shaft conveyance shall be provided to the hoist operator.

2.1.3.10 Where grooved drums are used, the grooves shall be of suitable size and pitch for the ropes used.

2.1.3.11 Flanges on drums shall extend radially three rope diameters beyond the last wrap or 4 inches whichever is the lesser.

2.1.3.12 Hoist ropes for non friction drums shall make at least one full turn on the drum shaft or spoke and shall be fastened securely by means of rope clips or clamps. There shall be a minimum of three full turns of rope on the hoisting drum when the rope is extended to its maximum working length.

2.1.3.13 Load End Attachments.

2.1.3.13.1 Wire rope shall be attached to the load by a method that develops at least 80 percent of the nominal strength of the rope.

Working Copy

2.1.3.13.2 Except for terminations where use of other materials is a design feature, zinc (spelter) shall be used for socketing wire ropes. Design feature means either the manufacturer's original design or a design approved by a registered professional engineer.

2.1.3.13.3 Load end attachment methods using splices are prohibited.

2.1.3.14 Safety device attachments to hoist ropes shall be installed and maintained in accordance with the manufacturers specifications to minimize internal corrosion and weakening of the rope.

2.1.3.15 Hoist ropes on all but the Waste Hoist, (See Chapter I.2.6.7.6) used to move personnel shall have a minimum factor of safety of 5 on static load when new, and 4.3 when in use.

2.1.3.16 Headframes shall be high enough to provide clearance for overtravel and safe stopping of the shaft conveyance.

2.1.3.17 Platforms on headframes shall be provided with handrails and toeboards.

2.1.3.18 Any shaft conveyance used to transport personnel shall be covered with a metal bonnet.

2.1.3.19 With the exception of the AIS shaft, rope guides shall be of lock coil construction.

2.1.4 The decommissioning requirements specified in GPDD apply.

2.2 Subsystem General Requirements

2.2.1 [UH02] Air Intake Shaft Hoist Requirements (Chapter I)

2.2.2 [UH03] Air Intake Shaft Requirements (Chapter I)

2.2.3 [UH04] Salt Handling Hoist Requirements (Chapter II)

2.2.4 [UH05] Salt Handling Shaft Requirements (Chapter II)

2.2.5 [UH06] Waste Hoist Requirements (Chapter III)

2.2.6 [UH07] Waste Shaft Requirements (Chapter III)

2.2.7 [UH08] Exhaust Shaft Requirements (Chapter IV)

Working Copy

2.3 Operational Requirements

2.3.1 General Requirements

2.3.1.1 The movement of all hoists shall be directed by use of a bell signal system. This system shall be in agreement with 30 CFR 57 and the New Mexico Safety Code.

2.3.1.2 There shall be a minimum of two methods of communication between the hoist operator and the shaft conveyance available at all times. One method shall be a voice system.

2.3.1.3 All hoist operations require a hoist man who operates the hoist, a top lander who controls access to the hoist at the surface, and a bottom lander who controls access to the conveyance.

2.3.1.4 Normal operating acceleration and deceleration for all hoists shall not exceed 6 ft/sec/sec. Emergency deceleration shall not exceed 16 ft/sec/sec.

2.3.1.5 No materials and supplies other than small hand tools are allowed on the mandeck during scheduled mantrips.

2.3.1.6 Conveyances shall not be lowered by the brakes alone except in case of emergency.

2.3.1.7 Before hoisting persons and to assure that the hoisting compartments are clear of obstructions, empty hoist conveyances shall be operated at least one round trip after:

2.3.1.7.1 Any hoist or shaft repairs or related equipment repairs that might restrict or obstruct conveyance clearance.

2.3.1.7.2 Any oversize or overweight material or equipment trips that might restrict or obstruct conveyance clearance.

2.3.1.7.3 Remaining idle for one shift or longer.

2.3.1.8 When not in use the conveyances shall be placed in a released condition and hoisted or lowered a suitable distance to prevent persons from boarding or loading the conveyance. "Released" means control shall be returned to the Master Control Station.

2.3.2 [UH02] Air Intake Shaft Hoist (Chapter I)

2.3.3 [UH04] Salt Hoist (Chapter II)

Working Copy

2.3.4 [UH06] Waste Hoist (Chapter III)

2.4 Structural Requirements

2.4.1 General Structural Requirements

2.4.1.1 All components of the shafts and hoists shall be designed in accordance with the HOIST MANUFACTURERS STANDARDS. All shaft construction and mining operations shall be in accordance with the Federal Mine Safety and Health Administration regulations.

2.4.1.2 Lightning protection system components and arrangement shall be provided. The lightning protection system shall be a combination of the conventional type per NFPA 78 and a Dissipation Array system.

2.4.1.3 The head frame and hoist houses shall be constructed of non-combustible materials.

2.4.1.4 The head frame and hoist houses shall be designed to conform to the requirements of UBC Seismic Zone 1.

2.4.1.5 The head frame, hoist house and hoist equipment foundations shall be designed for the following loads where applicable:

2.4.1.5.1 (D) Dead load-weight of structures and permanently fastened materials and equipment.

2.4.1.5.2 (L) Live load-platforms 100 psf or equipment loads whichever is greater.

2.4.1.5.3 (W) Wind load-91 mph velocity, exposure "C" per ANSI A58.1.

2.4.1.5.4 (E) Earthquake load-UBC Zone 1.

2.4.1.5.5 (DY) Dynamic load produced by rotation of the equipment- (100% impact on sheave supporting beams).

2.4.1.5.6 (Ra) Rope break accident load (100% of rope breaking strength).

2.4.1.6 Parts and spare parts shall conform to the design class of the hoist and to 30 CFR57.19122.

2.4.2 [UH04] Salt Hoist Structural Requirements (Chapter II)

2.4.3 [UH06] Waste Hoist Structural Requirements (Chapter III)

Working Copy

2.4.4 [UH02] Air Intake Hoist Structural Requirements (Chapter I)

2.5 General Arrangements and Essential Features

2.5.1 The Air Intake Shaft (AIS) hoist shall be able to be operated on back up power supplied by the standby diesel generators.

2.5.2 The AIS and the Salt Handling hoists shall be unbalanced drum hoists, and the Waste Hoist shall be a friction hoist with a counterbalance.

2.5.3 The SH shaft shall be equipped with timber guides, and the Waste shaft and the AIS shaft shall be equipped with rope guides.

2.5.4 The Waste hoist shall be supplied with a bridge crane to aid in the maintenance of the hoist.

2.6 Maintenance Requirements

2.6.1 Standard commercial maintenance shall be performed on all hoist equipment following the manufacturers recommendations and as required by State and Federal Codes as defined in the applicable operations and maintenance manuals.

2.6.2 Additional maintenance as required shall be performed following routine inspections that precede each shift operations.

2.6.3 If any part of the hoist equipment is found to be not functioning properly, the hoist shall not be used until the malfunction is corrected.

2.6.4 Preventive maintenance (PM) procedures shall be prepared for all mechanical and electrical equipment. Inspection frequencies shall be established.

2.6.5 Equipment shall be lubricated and serviced in the intervals recommended by the equipment manufacturer. All moving parts of the equipment for which lubrication is specified including the rope shall be regularly lubricated. The object of rope lubrication is to reduce internal friction and to prevent corrosion.

2.6.6 Replacement of rope because of wear and damage shall be as required by MSHA 30 CFR 57.

2.6.7 Replacement rope shall be the same size grade and construction as the original rope furnished by the hoist supplier.

2.6.8 Rope shall be stored in a manner that prevents damage or deterioration.

Working Copy

2.6.9 Unreeling or uncoiling of rope shall be done with care to avoid kinking or inducing a twist.

2.6.10 Before cutting a rope, means shall be used to prevent unlaying of the strands. Flame cutting of wire rope is prohibited.

2.6.11 During installation of rope, care shall be taken to avoid dragging the rope in dirt or across objects that can scrape, nick, crunch or induce sharp bends.

2.6.12 Rope shall be maintained in a well lubricated condition. Lubricant shall be of a type which does not hinder visual inspection.

2.6.13 Shaft Maintenance

2.6.13.1 Inspection and cleaning of the water collection rings and drainage piping shall be performed as necessary. Cleaning and water removal at the bottom of the shaft shall be performed as necessary.

2.6.13.2 Scaling shall be performed as required by regularly scheduled inspections in the salt portion of the shaft.

2.6.13.3 Shaft liner maintenance and grouting will be performed as necessary.

2.7 In-Service Inspections

2.7.1 At the start of each operating day for each Permanently Installed Hoist (PIH), the hoist operator shall visually inspect the hoist drum assembly, pedestal, bearing housings, brakes and brake operations, air compressor and all hydraulic or pneumatic pipes for general condition and possible leaks. Adequate lubrication shall be available to all bearings and other moving joints.

2.7.2 At the start of each operating day for each PIH, the top lander shall visually inspect the shaft conveyance, cable attachments, cage doors, and collar doors if applicable for general condition and proper operation.

2.7.3 At the start of each operating day the various methods of communication between the hoist operator, top lander, bottom lander and shaft conveyance shall be checked for operability.

2.7.4 At the start of each operating day, the bottom lander shall visually inspect the safety gates and station area for proper operation.

2.7.5 When removing salt (muck) from the loading pocket of the salt handling station, a general vigilance of the operations shall be maintained to assure proper operation of the gates and loading chute.

Working Copy

2.7.6 At least once every fourteen calendar days, each wire rope in service shall be visually examined along its entire active length for visible structural damage, corrosion, and proper lubrication or dressing. In addition, visual examination for wear and broken wires shall be made at stress points, including the area near attachments, where the rope rests on sheaves, where the rope leaves the drum, at drum crossovers, and at change-of-layer regions. When any visible condition that results in a reduction of rope strength is present, the affected portion of the rope shall be examined on a daily basis.

2.7.7 At least every six months, caliper measurements or non-destructive tests shall be made on hoist ropes at the following locations:

- Wherever wear is evident
- Immediately, above the socket or clip, and above the safety connection
- Where the rope rests on the sheave
- Where the rope leaves the drum when the shaft conveyance is at it's normal stopping point
- At least 100 feet intervals along the rope

2.7.8 For each PIH hoist rope which has be in idle for a month or more shall be given a through inspection before it is placed in service.

2.7.9 The operability of the Emergency Stop Tripping Logic, limit switches, overtravel, deadman controls, position indicators, braking mechanisms, and other limiting devices shall be tested at the start of each operating shift.

2.7.10 All permanently installed shaft conveyances shall be operated empty through one round trip at the start of each operating shift.

2.7.11 Any hoist in which a load sustaining part has been altered, repaired or replaced shall be tested to assure subsequent operations can be conducted safely.

2.7.12 At least once each week any shaft conveyance that has safety catches installed shall be suitably rested and the hoist rope slackened to test for the unrestricted functioning of the safety catches and their activating mechanisms.

2.7.13 Once per week the waste handling hoist shall be checked to assure that all cables are sharing the load within acceptable tolerances.

Working Copy

2.7.14 Annual Periodic Maintenance Inspection on the Waste Hoist is performed by the vendor of the equipment.

2.7.15 The entire shaft, excluding the Exhaust Shaft, including furnishings, shall be inspected as required by applicable codes or at a minimum of one month intervals to detect cracking, corrosion, deterioration, and water intrusion. Because of operational and ALARA concerns the Exhaust Shaft shall be inspected on a quarterly basis.

NOTE: The Exhaust Shaft inspection shall utilize a closed circuit television camera that shall be lowered down the shaft through an inspection hatch incorporated into the exhaust plenum elbow at the top of the shaft.

2.7.16 Vendor recommended periodic maintenance shall be performed on the Waste Hoist service crane.

2.8 Instrumentation and Control Requirements

2.8.1 [UH02] AIS Hoist (Chapter I)

2.8.2 [UH03] Air Intake Shaft (Chapter I)

2.8.3 [UH04] Salt Handling Hoist (Chapter II)

2.8.4 [UH05] Salt Handling Shaft (Chapter II)

2.8.5 [UH06] Waste Hoist (Chapter III)

2.8.6 [UH07] Waste Shaft (Chapter III)

2.8.7 [UH08] Exhaust Shaft (Chapter IV)

2.9 Interfacing System Requirements

2.9.1 Primary Systems Interfacing

2.9.1.1 EDOO - Electrical Systems

2.9.1.1.1 Provide 2700 KVA, 3-phase power, at 480 volts and 60 HZ to the solid state power converter for the main DC motor for the Salt Handling hoist. The physical interface shall be on the secondary side of the transformer that converts 13.8 kV to 480 volts.

2.9.1.1.2 Provide 3000 KVA, 3-phase power, at 2400 volts and 60 HZ to the MG set that is the alternate power source for the main DC motor for the Salt Handling hoist. The physical interface shall be on the load side of the 2400 volt vacuum breaker at the 2400 Volt switchgear.

Working Copy

2.9.1.1.3 Provide 3-phase power, at 480 volts and 60 HZ to the main 400 HP motor for the Air Intake Shaft hoist. The physical interface shall be on the load side of the hoist feeder breaker at the 480 V switchgear.

2.9.1.1.4 Provide 1000 KVA, 3-phase power, at 475 volts and 60 HZ to the solid state power converter for the main DC motor for the Waste Handling hoist. The physical interface shall be on the secondary side of the transformer that converts 13.8 kV to 475 volts.

2.9.1.1.5 Provide 480 volt, 3-phase power at 60 Hz to the service crane for the Waste Hoist. The physical interface shall be at the safety disconnect switch that supplies power to the trolley lines.

2.9.1.1.6 Provide 480 volt, 3-phase power at 60 Hz for two 40 HP drive motors for the Galloway Hoist.

2.9.1.1.7 Provide 480 volt, 3-phase power at 60 Hz for one 25 HP drive motor for auxiliary winch in the Air Intake Shaft.

2.9.1.1.8 Provide backup diesel power for the Air Intake Shaft Hoist drive.

2.9.1.2 CF00 - Plant Building, Facilities and Miscellaneous Equipment.

2.9.1.2.1 Provide Sheltered Space for each of the hoist houses and control rooms.

2.9.1.2.2 Provide mounting support for the waste hoist service crane.

2.9.1.2.3 Provide the Auxiliary Air Intake Building. The physical interface is the connection to the air tunnel leading to the Waste Hoist Shaft.

2.9.1.3 CM00 - Plant Monitoring and Communication

2.9.1.3.1 Provide communications for operations and maintenance.

2.9.1.3.2 Provide remote control display, recording and alarm of hoist control and operation.

2.9.1.3.3 Provide electrical signal interfaces for data. The physical interface for electrical signals shall be at the field terminals of the local processing units (LPUs).

2.9.1.4 FP00 - Fire Protection

2.9.1.4.1 Provide fire extinguishers on conveyances.

2.9.1.4.2 Provide fire protection services in the hoist houses and control rooms.

Working Copy

2.9.1.5 VU00 - Ventilation

2.9.1.5.1 Provide the ventilation to the underground control stations and shafts.

2.9.1.5.2 Provide the exhaust duct from the collar of the Exhaust Shaft to the Filter Building or to the atmosphere.

2.9.1.6 HV00 - Heating Ventilation and Air Conditioning

2.9.1.6.1 Provide the heating and cooling for the hoist houses.

2.9.1.6.2 Provide the cooling for the control equipment in the Salt and Waste Hoist control rooms.

2.9.1.7 CA01-Surface Compressed Air

2.9.1.7.1 Provides the compressed air for the brake systems for the AIS Galloway and Salt Hoists.

2.9.1.7.2 Provide compressed air to open collar doors on AIS and salt shaft.

2.9.1.7.3 Provide compressed air to the Lilly Controller on Waste Hoist.

2.9.1.8 AU00-Underground Facility & Equipment.

Provides the rock bolts for support of equipment and protective screenery in all shafts.

2.9.2 Secondary System Interfacing.

The UH00 is the secondary system that interfaces with and provides services to the systems listed below.

2.9.2.1 VU00 - Underground Ventilation System

2.9.2.1.1 Provide the intake shafts for the supply air for the ventilation system.

2.9.2.1.2 Provide the Exhaust Shaft for the exhaust air for the ventilation system.

2.9.2.2 CM00 - Plant Monitoring and Communications.

2.9.2.2.1 Provides the status and alarm signals from the hoist control system including "Mode of Operation", "Men Working in Shaft", and "Emergency Stop". The physical interface shall be at the input terminals of the LPU.

Working Copy

2.9.2.3 WH00 - Waste Handling System

2.9.2.3.1 Provides the hoist and conveyance to move waste containers between the Waste handling Building and the storage horizon.

2.9.2.3.2 Provides the Shaft that is the transportation path for waste containers between the Waste Handling Building and the storage horizon.

2.9.2.4 EM00/EU02 - Environmental Monitoring System

2.9.2.4.1 Provides the shaft mounting locations for the geomechanical instruments defined in EM00-SDD.

2.9.2.4.2 Provides the transportation to obtain manual shaft readings for EM00-SDD.

2.9.2.5 CA03-Underground Compressed Air

2.9.2.5.1 Provides the shafts that are the paths for the compressed air to the underground.

2.10 Quality Assurance Requirements

2.10.1 To assure that the required quality is achieved for all aspects and activities of the WIPP, a comprehensive Quality Assurance program shall be implemented and controlled in conformance with 10 CFR 830.120, ASME NQA-1, NQA-2, Subpart 2.7, as set forth in the U.S. Department of Energy Carlsbad Area Office (DOE/CAO) Quality Assurance Program Description CAO-94-1012.

2.10.2 Design specifications, equipment specifications, technical specifications, and drawings for the system, its components and equipment, and services related thereto shall contain quality assurance (QA) program requirements appropriate to the item or scope of work being defined or specified. These specifications shall also define quality assurance practices such as inspections, examinations, and tests appropriate to the specified item or service.

2.10.3 A graded approach shall be used. Application of the appropriate Quality Assurance requirements of shall be determined in a manner consistent with the relative associated probability and consequences of risk and functional importance of the item or service involved, as represented by the Design Class of the equipment delineated in Chapter I.4 above.

Working Copy

2.11 Codes and Standards Requirements

Listed below are the codes, standards, regulatory requirements, etc. to be applied to the system design, construction, and operation, and to the individual components of the system:

10 CFR 830.120	"Quality Assurance"
30 CFR Part 57	"Safety and Health Standards - Underground Metal and Nonmetal Mines"
DOE Order 420.1A	*Facility Safety*
DOE Order 430.1B	*Real Property Asset Management*
ANSI-M11.1	America National Standard for the Wire Rope for Mines

New Mexico Mine Safety Code for All Mines, Rule No. 81-1

CAO-94-1012	Carlsbad Area Office Quality Assurance Program Description
UBC	Uniform Building Code.
AISC M011	Manual of Steel Construction.

2.12 Reliability Assurance Requirements

2.12.1 To assure that the required reliability of the Underground Hoisting System is achieved, a program shall be implemented that controls and verifies the quality attainment through design, procurement, manufacture, installation and operation.

2.12.2 As a minimum the following are applicable to the Underground Hoisting System:

2.12.2.1 Installation of systems shall require acceptance testing of the complete system with specified acceptable results.

2.12.2.2 Periodic checkout of installed systems shall be conducted to verify continued reliability of the system. The extent of the checkout shall be determined by the cognizant design department. The checkout shall be procedure controlled and considered vendor recommendations, and Bureau of Mine and MSHA guidelines.

Working Copy

3.0 DESIGN DESCRIPTION

3.1 Summary, Underground Hoisting System (All Hoists & Shafts)

3.1.1 This system includes the four shafts and the three hoists that support underground operations. It is divided into seven major sub systems. Detail specifications for systems and components, and the current status of these specifications can be found by referring to the WIPP Specification Register.

3.1.2 The location of each of the shafts relative to the rest of the facility is shown on Figure S-1.

3.1.3 The Air Intake Shaft is concrete lined down to the top of a concrete key. The Air Intake Shaft is described in subsystem UH03. In this shaft is a workdeck called a Galloway that can be located anywhere in the shaft from the station to the Sub Collar. A conveyance exists that can transport personnel and equipment from the surface to the underground that passes through the Galloway. The Hoist House, the Conveyance and the Galloway are all described in subsystem UH02.

3.1.4 The Salt Shaft is steel lined to the top of a concrete key. At the bottom of the Salt Shaft are salt loading bins to receive and measure salt for loading into the conveyance. The Salt Shaft and the salt loading bins are described in subsystem UH05. The shaft has guides for a conveyance that is used to transport personnel and material.

The conveyance and headframe is designed so that as the conveyance is raised a load of salt can be automatically dumped into a waiting vehicle. The Hoist House, and the conveyance are described in subsystem UH04.

3.1.5 The Waste Shaft is concrete lined down to the top of a concrete key. The Waste Shaft is the largest diameter shaft on site. The Waste Shaft is described in subsystem UH07. The hoist drive for the waste conveyance is a friction wheel. The conveyance can carry personnel or material, and is the largest conveyance on site. The Waste Hoist and shaft are enclosed on the surface by the Waste Handling Building. The Hoist House, and the conveyance are all described in subsystem UH06.

3.1.6 The Exhaust Shaft is concrete lined down to the top of a concrete key. The Exhaust Shaft is the only shaft on site that does not have a hoisting system associated with it. The Exhaust Shaft is described in subsystem UH08.

3.2 Detail System Description

3.2.1 [UH02] The AIS Hoist System Description (Chapter I)

3.2.2 [UH03] The AIS Shaft System Description (Chapter I)

Working Copy

3.2.3 [UH04] Salt Handling Hoist Requirements (Chapter II)

3.2.4 [UH05] Salt Handling Shaft Requirements (Chapter II)

3.2.5 [UH06] The Waste Hoist System Description (Chapter III)

3.2.6 [UH07] The Waste Hoist Shaft System Description (Chapter III)

3.2.7 [UH08] The Exhaust Shaft System Description (Chapter V)

3.3 System Performance Characteristics

3.3.1 [UH02] Air Intake Shaft Hoist (Chapter I)

3.3.2 [UH03] Air Intake Shaft (Chapter I)

3.3.3 [UH04] Construction and Salt Handling Shaft Hoist (Chapter II)

3.3.4 [UH05] Construction and Salt Handling Shaft (Chapter II)

3.3.5 [UH06] Waste Shaft Hoist (Chapter III)

3.3.6 [UH07] Waste Shaft (Chapter III)

3.3.7 [UH08] Exhaust Shaft (Chapter IV)

3.4 System Arrangement

3.4.1 [UH02] AIS Hoist System Arrangement (Chapter I)

3.4.2 [UH03] AIS Shaft System Arrangement (Chapter I)

3.4.3 [UH04] Salt Hoist System Arrangement (Chapter II)

3.4.4 [UH05] Salt Shaft System Arrangement (Chapter II)

3.4.5 [UH06] Waste Hoist System Arrangement (Chapter III)

3.4.6 [UH07] Waste Hoist Shaft System Arrangement (Chapter III)

3.4.7 [UH08] Exhaust Shaft System Arrangement (Chapter IV)

3.5 Component Design Description

3.5.1 [UH02] AIS Hoist Component Design Description (Chapter I)

Working Copy

3.5.2 [UH03] AIS Shaft Component Design Description (Chapter I)

3.5.3 [UH04] Salt Hoist Component Design Description (Chapter II)

3.5.4 [UH05] Salt Shaft Component Design Description (Chapter II)

3.5.5 [UH06] Waste Hoist Component Design Description (Chapter III)

3.5.6 [UH07] Waste Hoist Shaft Component Design Description (Chapter III)

3.5.7 [UH08] Exhaust Shaft Component Design Description (Chapter IV)

3.6 Instrumentation and Control Information

3.6.1 [UH02] I and C for the AIS Hoist System (Chapter I)

3.6.2 [UH03] I and C for the AIS Shaft System (Chapter I)

3.6.3 [UH04] I and C for the Salt Hoist System (Chapter II)

3.6.4 [UH05] I and C for the Salt Shaft System (Chapter II)

3.6.5 [UH06] I and C for the Waste Hoist System (Chapter III)

3.6.6 [UH07] I and C for the Waste Hoist Shaft System (Chapter III)

3.6.7 [UH08] I and C for the Exhaust Shaft System (Chapter IV)

3.7 System Interfaces(All Hoists & Shafts)

3.7.1 [UH02] AIS Hoist (Chapter I)

3.7.2 [UH03] AIS Shaft (Chapter I)

3.7.3 [UH04] Salt Hoist (Chapter II)

3.7.4 [UH05] Salt Shaft (Chapter II)

3.7.5 [UH06] Waste Hoist (Chapter III)

3.7.6 [UH07] Waste Shaft (Chapter III)

3.7.7 [UH08] Exhaust Shaft (Chapter IV)

Working Copy

4.0 OPERATIONS - ALL HOISTS

The operation of the Underground Hoisting System is divided into a Start-Up, Normal Operation, Infrequent Operations, and Shutdown sections. Each of these sections is discussed for all of the hoists and shafts. The procedure guidelines that follow are based on a system that is known to be operational with all instrument calibrations complete.

If maintenance has been performed, the necessary retest has been satisfactorily completed so that the system is known to be operational. Personnel that operate the equipment must be fully qualified to operate the equipment in accordance with written qualification procedures, or under the direct supervision of a qualified operator. "Normal" operating parameters for equipment shall be obtained by reference to the Vendors instruction manual.

4.1 [UH02] AIS Hoist, and the Galloway (Chapter I)

4.2 [UH04] Salt Hoist & Handling Equipment (Chapter II)

4.3 [UH06] Waste Hoist (Chapter III)

5.0 SYSTEM LIMITATIONS, SETPOINTS, AND PRECAUTIONS - All Hoists

This section describes or refers to the location of operating limits, setpoints, alarms, and precautions as related to the operation of the underground hoisting system. The hoists and related equipment are not designed to operate after or during a design basis earthquake or tornado. After such an event the hoists may need to be inspected and functionally checked to assure they are operating normally. Interlocks are discussed in Chapter II of this document and are not repeated in this section.

A "Protective Stop" alarm refers to a condition that if it occurs will not stop the hoist but will prevent it from starting once it has been stopped.

A "Controlled Stop" alarm refers to a more serious condition that if it occurs, will stop the hoist in the normal deceleration mode.

An "Emergency Stop" alarm refers to a condition serious enough to stop the hoist in the maximum allowable deceleration mode.

5.1 [UH02] AIS Hoist System (Chapter I)

5.2 [UH04] Salt Hoist System (Chapter II)

5.3 [UH06] Waste Hoist System (Chapter III)

Working Copy

6.0 OFF-NORMAL EVENTS AND RECOVERY - All Hoists

The hoisting system is not designed to meet the design base earthquake or tornado. If either of these events occur, the hoists may not be operational.

This section describes creditable situations that may occur with the hoisting equipment, and the alarms that signal the event. This section also outlines recovery procedures from a system standpoint. Instructions to recover from these situations should be carefully thought out. The philosophy of these recovery actions should be to take immediate response to put the hoisting plant in a safe condition, then take deliberate well thought out action to recover, more completely. The system design allows for multiple methods of recovery for most situations.

6.1 [UH02] AIS Hoist and Galloway (Chapter I)

6.2 [UH04] Salt Hoist (Chapter II)

6.3 [UH06] Waste Hoist (Chapter III)

7.0 MAINTENANCE - All Hoists & Shafts

This section is devoted to those features of the underground hoist system that enable and enhance maintenance of the system. Guidelines are provided for performing maintenance and in-service inspection.

In accordance with DOE O 4330.4A requirements, the maintenance program "...shall contain provisions sufficient to preserve, predict, or restore the availability, operability, and reliability of plant structures, systems, and components important to safe and reliable operation of the ...facility." This is the guiding requirement and basis for the following material.

7.1 Maintenance Approach (All Hoists & Shafts)

The maintenance program will ensure the equipment is maintained in a manner which promotes operational safety, work health, environmental protection and compliance, equipment preservation, and cost-effectiveness while meeting the programmatic mission. In carrying out this program, a graded approach shall be used in the development and implementation of the maintenance program. By a graded approach, it is intended that the depth of detail required and the magnitude of resources expended for a particular maintenance function be commensurate with the function's importance to safe and reliable operation, environmental compliance, safeguards and security, programmatic mission, facility preservation and/or other facility specific requirements.

Maintenance efforts on the system equipment should be considered in the following order of precedence:

- Investigate, document, rework, service, and align the equipment to approved alignment procedures.

- Remove and replace original equipment with available spare equipment. Align to approved alignment procedures for operation. The original removed equipment is to be reworked, when appropriate, and placed with other spare equipment for future use.

- Remove and rework the original equipment, reinstall and align the equipment to approved alignment procedures for operation.

Regardless of what maintenance is performed upon a component, proper alignment, rotation, liquid level, cleanliness, clearances, performance, other checks and tests should be made and verified to assure the component is restored to service in an acceptable condition. If parts have been replaced or reworked during maintenance, the component or system should undergo non-destructive and functional verification of the component or system that it meets its performance and operability requirements. After maintenance, restore the components and system to the design operating condition that existed prior to the start of maintenance.

The sections of maintenance and in-service inspection which follow on subsequent pages require certain frequencies for performing the required operations. Where it can be justified by maintenance records, trending, and other records required by a graded approach to the Conduct of Maintenance, the frequencies for performing maintenance and in-service inspection may be adjusted. Based upon these justifications, the operations required may be conducted either more or less frequently than specified by the equipment manufacturer. However, where these designated frequencies are specified in a National Code, government regulations, or DOE Orders, the frequency of conducting the required operation shall not be decreased.

Certain test and calibration equipment requires trained and certified maintenance personnel that are thoroughly familiar with the test equipment and the equipment on which it is to be used. Hoisting and rigging equipment must comply with the requirements of a number of state and federal agencies. These requirements are integrated into a WIPP overall hoisting and rigging manual. This manual governs the requirements for surface and underground hoisting and rigging equipment and for personnel qualifications.

Working Copy

7.2 Corrective Maintenance (All Hoists & Shafts)

Corrective maintenance is performed upon a component or a system found to be defective during inspections or pre-operational checks to restore the component or system to a condition suitable to perform its required functions in a reliable manner. A systematic procedure of inspection, testing and maintenance of shaft and hoisting equipment shall be developed and followed. Each procedure shall include steps for preparing the system and equipment and the interfacing systems for safe and efficient corrective maintenance. If it is found or suspected that any part is not functioning properly, the hoist shall not be used until the malfunction has been located, reworked, and aligned.

At the time of completion, the person performing inspections, tests, and maintenance of shafts and hoisting equipment shall certify, by signature and date, that they have been done. A record of any part that is not functioning properly shall be made and dated.

The following discussions describe the corrective maintenance requirements for the components of the underground hoisting system:

7.2.1 [UH02] Air Intake Shaft Hoist (Chapter I)

7.2.2 [UH03] Air Intake Shaft (Chapter I)

7.2.3 [UH04] Salt Handling Hoist (Chapter II)

7.2.4 [UH05] Salt Handling Shaft (Chapter II)

7.2.5 [UH06] Waste Hoist (Chapter III)

7.2.6 [UH07] Waste Shaft (Chapter III)

7.2.7 [UH08] Exhaust Shaft (Chapter IV)

7.3 Preventive Maintenance (All Hoists & Shafts)

Preventive maintenance consists of performing those actions and services necessary to keep components working without breakdown. Preventive maintenance is generally scheduled to be performed at specific time intervals. It is not performed on equipment that can be more economically and safely replaced rather than serviced. Most of the underground hoisting equipment and tools are furnished with an operations and maintenance manual. This section outlines periodic maintenance and time intervals for consideration when developing preventative maintenance instructions.

These are not requirements and may be modified to fit existing conditions and requirements.

More detailed preventive maintenance instructions should be developed for each of the underground hoist systems and integral equipment. Each instruction should include:

- Title and purpose of the maintenance to be performed.
- Applicable references such as work procedures and manufacturer's operation and maintenance manual.
- Prerequisites for preparing the equipment to be maintained in safe condition for maintenance.
- Precautions and Limitations to be aware of before and during the maintenance activity.
- Special tools, equipment and materials needed for the maintenance.
- Acceptance criteria to be met at completion of the maintenance activity.
- Specific and sufficiently detailed preventive maintenance instructions.
- Final calibrations, tests and checks needed before restoring the equipment and system for normal service.

Much of the underground hoisting equipment is constructed of fabricated structural steel that is painted. All painted surfaces should be periodically inspected for signs of paint chipping, peeling, cracking, etc., and to locate areas where paint has been removed by accidental contact. Areas where paint has been removed should be properly prepared and repainted. Areas where normal wear will repeatedly remove the paint should be periodically inspected for signs of corrosion. It is expected that unprotected carbon steel will not experience significant corrosion, even in the underground facilities.

However, if corrosion protection is applied, such as a light coating of oil, care should be taken so that dirt and Salt dust does not accumulate on the oil coating.

7.3.2 [UH02] Air Intake Shaft Hoist (Chapter I)

7.3.3 [UH03] Air Intake Shaft (Chapter I)

7.3.4 [UH04] Salt Handling Hoist (Chapter II)

Working Copy

7.3.5 [UH05] Salt Handling Shaft (Chapter II)

7.3.6 [UH06] Waste Hoist (Chapter III)

7.3.7 [UH07] Waste Shaft (Chapter III)

7.3.8 [UH08] Exhaust Shaft (Chapter IV)

7.4 In-Service Inspection and Predictive Maintenance (All Hoists & Shafts)

Externally visible operational pieces of underground hoisting equipment should be subject to a pre-operational check at the start of each work shift. Any defects found should be recorded and action taken to correct or repair the defective item. Any potential defects of vital equipment important to safety or economic operation, predicted from records of inspection and maintenance activities or monitoring instruments, should result in a plan being developed to correct or repair the item before breakdown or damage. Some equipment requires specific in-service examinations that are of more significance than a general observational checkout. This section outlines for consideration some in-service checks.

7.4.1 [UH02] Air Intake Shaft Hoist (Chapter I)

7.4.2 [UH03] Air Intake Shaft (Chapter I)

7.4.3 [UH04] Salt Handling Hoist (Chapter II)

7.4.4 [UH05] Salt Handling Shaft (Chapter II)

7.4.5 [UH06] Waste Hoist (Chapter III)

7.4.6 [UH07] Waste Shaft (Chapter III)

7.4.7 [UH08] Exhaust Shaft (Chapter IV)

Working Copy

Chapter I
Table of Contents

Subsystem UH02, Air Intake Shaft Hoist
and
Subsystem UH03, Air Intake Shaft

1.0 PRIMARY FUNCTIONS I-1

1.1 UH02 Air Intake Shaft Hoist I-1

1.2 UH03 Air Intake Shaft Primary Functions I-1

2.0 DESIGN REQUIREMENTS I-1

2.1 General Requirements I-1

2.2 Subsystem General Requirements I-1

2.3 Operational Requirements I-5

2.4 Structural Requirements I-5

2.5 General Arrangements and Essential Features I-5

2.6 Maintenance Requirements I-6

2.7 In-Service Inspections I-6

2.8 Instrumentation and Control Requirements I-6

2.9 Interfacing System Requirements I-7

2.10 Quality Assurance Requirements I-7

2.11 Codes and Standards Requirements I-7

2.12 Reliability Assurance Requirements I-7

3.0 DESIGN DESCRIPTION I-7

3.1 Summary I-7

3.2 Detail System Description I-7

Working Copy

3.3 System Performance Characteristics I-11

3.4 System Arrangment I-12

3.5 Component Design Description I-13

3.6 System Interfaces I-23

4.0 OPERATIONS I-25

5.0 SYSTEM LIMITATIONS, SETPOINTS, AND PRECAUTIONS I-25

5.1 UH02 AIS Hoist System I-25

6.0 OFF-NORMAL EVENTS AND RECOVERY I-28

7.0 MAINTENANCE I-28

7.1 Maintenance Approach I-28

7.2 Corrective Maintenance I-28

Working Copy

List of Figures

Figure Page

FIGURE UH I-1 AIS Hoist Simplified Diagram I-30

FIGURE UH I-2 AIS Galloway Simplified Diagram I-31

FIGURE UH I-4 AIS Auxiliary Winch Simplified Diagram I-33

FIGURE UH I-5 Upper Sections, Air Intake Shaft I-34

FIGURE UH I-6 Lower sections, Air Intake Shaft I-35

FIGURE UH I-7 AIS Hoist System Arrangement I-36

FIGURE UH I-8 AIS Hoist Operators Console I-37

FIGURE UH I-9 AIS Signal Panel I-38

FIGURE UH I-10 Galloway Winch Operator's Console I-39

FIGURE UH I-11 AIS Auxiliary Winch Control Panel I-40

Working Copy

List of Tables

Table Page

TABLE UH I-1 AIS Hoist Instrumentation Controls & Interlocks I-20

TABLE UH I-2 OPERATING LIMITS AIS HOIST I-26

TABLE UH I-3 CONTROL SETPOINTS AIS HOIST I-27

Working Copy

Chapter I

Subsystem UH02, Air Intake Shaft Hoist and Subsystem UH03, Air Intake Shaft

1.0 PRIMARY FUNCTIONS [**All Shafts & Hoists, Refer to Chapter G**]

1.1 UH02 Air Intake Shaft Hoist

1.1.1 This subsystem provides a work platform called a galloway that can be positioned at any elevation in the Air intake Shaft (AIS) to accommodate maintenance of the shaft, maintenance of the services installed in the shaft, and access to experiments conducted in the shaft.

1.1.2 This subsystem also provides a shaft conveyance called a cage and the associated drives for moving personnel through the AIS.

1.1.3 This subsystem provides a utility winch at the shaft collar which can be used for miscellaneous work and lifts separate from the galloway and shaft conveyance.

1.2 UH03 Air Intake Shaft Primary Functions

1.2.1 This subsystem provides a shaft to duct fresh air to the underground areas.

1.2.2 This subsystem provides the secondary emergency passageway for personnel to exit the mine.

1.2.3 This subsystem provides a path for underground utilities.

1.2.4 This subsystem provides a location to mount instrumentation for measuring hydrostatic pressures behind the lining, salt pressure behind the key and radial convergence of the shaft.

2.0 DESIGN REQUIREMENTS

2.1 General Requirements [**All Shafts & Hoists, Refer to Chapter G**]

2.2 Subsystem General Requirements

2.2.1 UH02 Air Intake Shaft Hoist Requirements

Working Copy

2.2.1.1 The AIS hoist shall have a permanently installed head frame which supports five sheaves (two for the galloway, two for the utility winch, and one for the shaft conveyance) and two shaft guides. Only one of the utility winch sheaves is normally used.

2.2.1.2 The AIS hoist shall have a single wire rope and drum, powered by a 400 HP AC motor. The wire rope diameter shall be 1.25 inches, and the wire shall be of sufficient length to hoist from a depth of 2,150 feet.

2.2.1.3 The AIS hoist shall be manually operated using a controller lever and a brake lever.

2.2.1.4 The AIS hoist speed shall be controlled by motor in seven discrete steps to a maximum speed of approximately 800 FPM. Exact speed on each step is determined by the direction of travel and load.

2.2.1.5 The AIS hoist shall not be used for normal man trips to routinely move personnel to and from the underground horizon.

2.2.1.6 The AIS hoist shall meet the requirements of 30 CFR Part 57 for shaft sinking and inspection, and for emergency mine egress.

2.2.1.7 The AIS hoist shall have two 1-inch diameter wire rope guides to provide a stable travel path for the cage. These guides shall be attached to the AIS station floor and to the head frame with spring hangers to maintain proper tension.

2.2.1.8 The AIS hoist shall have a visual gage to indicate to the hoist operator the elevation of the man cage.

2.2.1.9 The AIS cage shall pass freely through the galloway with minimal guidance by an operator on the galloway.

2.2.1.10 The AIS Hoist shall have a "deadman" switch that must be held in the on position to enable the hoist to move.

2.2.1.11 The galloway work platform shall be raised and lowered by two independent winches. The single wire ropes on each winch shall be 1 inch diameter, and of sufficient length to position the galloway anywhere in the shaft.

2.2.1.12 The two galloway winches shall be operated by separate control on a control panel. One control shall select the direction of galloway motion. The other control shall select whether one or both winches shall be operated.

2.2.1.13 The galloway shall not be used for normal man trips to routinely move personnel to and from the underground horizon.

Working Copy

2.2.1.14 The galloway winches shall meet the requirements for 30 CFR 57.1900 (C, 57.19049, 57.19050, and 57.19054) for construction/inspection use.

2.2.1.15 The galloway shall have retractable stabilizers which extend to the shaft wall to keep the galloway stable, if needed, when it is not moving.

2.2.1.16 The galloway shall have a conveyance travel way through it to accommodate the man cage. The openings shall be equipped with hinged doors.

2.2.1.17 The utility winch should be provided that has a single wire rope and drum, powered by at least a 25-HP AC motor. The wire diameter shall be 7/8 inch, and the wire shall be of sufficient length to hoist from a depth of 2,150 feet. The wire rope shall be stored on its drum and must be strung on its sheave when use of the winch is desired.

2.2.1.18 The utility winch shall be operated from it's own local control panel.

2.2.1.19 A concrete collar with support beams and a grated deck shall be provided at the top of the AIS to allow personnel safe access to the shaft conveyance cage without obstructing airflow.

2.2.1.20 The grated deck shall have air operated collar doors which raise up to allow the shaft conveyance to pass through the deck.

2.2.1.21 An electric powered air compressor shall be provided to supply high pressure air to operate the pneumatic braking systems and the collar doors.

2.2.1.22 All electrical switchgear, instrumentation and control panels needed to operate the hoists, galloway winches, and related equipment shall be installed in the AIS winch house, hoist house, and shaft collar area.

2.2.1.23 The AIS hoist system shall have a slack switch that senses reduction of rope tension below safe limits and stops the hoist.

2.2.1.24 Electrical equipment may be housed in NEMA 1 enclosures indoors where it is clean and dry. Other locations shall use NEMA rated enclosures suitable to their location conditions. Shaft electrical equipment shall be housed in NEMA 4X enclosures.

2.2.1.25 Power to operate all drive systems shall be supplied at 480 volts ± 10%, 3-phase, at 60 Hertz ± 3%.

2.2.1.26 Position indication equipment shall be provided so that the distance between the conveyance and the galloway is indicated to the hoist operator.

Working Copy

2.2.2 UH03 Air Intake Shaft Requirements

2.2.2.1 The AIS shall extend from the surface to the underground horizon and serve as the principal path for fresh air to the underground.

2.2.2.2 The AIS shall be lined with non-reinforced concrete from the bedded salt to the surface.

2.2.2.3 The AIS shall have a sub collar area which permits the location of utility boxes out of the weather if desired.

2.2.2.4 The shaft collar shall support a grated cover that allows air to flow through but prevents large objects from falling into the shaft.

2.2.2.5 The shaft collar shall have air operated doors that will open to allow the shaft conveyance to pass through.

2.2.2.6 The shaft shall have a portable cover that can close off the openings in the grate when personnel are working in the shaft.

2.2.2.7 The shaft shall have a minimum free diameter of 16 ft-7 in. The salt section was originally 20 ft -3 in. feet to allow for future creep.

2.2.2.8 The shaft lining shall be a minimum of 12 in. thick.

2.2.2.9 The shaft utilities shall include a 2 inch water supply line, a 6 in. compressed air line, a shaft water drain line, 480 volt AC power, and communications and instrumentation conductors.

2.2.2.10 All construction and non construction materials within the shaft shall not support combustion.

2.2.2.11 The collar and pad shall be suitable for supporting the permanent headframe.

2.2.2.12 The shaft collar shall extend approximately 1 foot above the general ground level to prevent surface water from flowing into the shaft.

The design shall provide facilities to minimize rain infiltration into the shaft. The inlet configuration shall provide for a low inlet pressure loss.

2.2.2.13 Water collection rings shall be provided and piped to the shaft underground station.

2.2.2.14 Chemical seal rings shall be placed behind the shaft key to prevent water migration past the key.

Working Copy

2.2.2.15 At the completion of the shaft construction work, the liner of the shaft shall be contact grouted from the top of the key to the surface as needed.

2.2.2.16 All construction joint waterstop materials must be compatible with salt water.

2.2.2.17 The salt below the key shall be lined with wire mesh and anchored with rock bolts where needed.

2.3 Operational Requirements [**All Shafts & Hoists, Refer to Chapter G**]

2.3.1 General Requirements

2.3.2 UH02 Air Intake Shaft Hoist

2.3.2.1 To avoid restriction of ventilation flow the galloway may be parked in the unlined sections of the shaft when not in use.

2.3.2.2 The utility winch shall only be used to support construction or maintenance operations in the AIS.

2.3.2.3 When personnel are working in the AIS, the underground ventilation system shall not be operated with air in excess of 300,000 CFM. The portable covers must be in place over the collar grates.

2.4 Structural Requirements

2.4.1 General Structural Requirements [**All Shafts & Hoists, Refer to Chapter G**]

2.4.2 UH02 Air Intake Hoist Structural Requirements

2.4.2.1 The headframe shall be a steel-framed braced open tower with a pair of sloping raker legs. The raker legs shall also be steel-framed with bracing members.

2.4.2.2 The headframe and raker legs shall be supported at grade by spread footings.

2.4.2.3 The hoist house, drum hoist equipment, and galloway hoist equipment foundations shall be spread footings.

2.4.2.4 The hoist house and galloway hoist equipment shall be steel-framed construction. The hoist house shall have insulated metal roofing and siding.

2.5 General Arrangements and Essential Features [**All Shafts & Hoists, Refer to Chapter G**]

Working Copy

2.6 Maintenance Requirements [**All Shafts & Hoists, Refer to Chapter G**]

2.7 In-Service Inspections [**All Shafts & Hoists, Refer to Chapter G**]

2.8 Instrumentation and Control Requirements [**All Shafts & Hoists, Refer to Chapter G**]

2.8.1 UH02 AIS Hoist Instrumentation and Control Requirements

2.8.1.1 Power for the hoisting plant shall be provided by Area Substation No. 6. There shall be a hoist main disconnect which feeds power to all other breakers and disconnect switches.

2.8.1.2 Separate electrical disconnect switches shall be provided for the following equipment:

- hydraulic pump breaker
- east galloway winch
- west galloway winch
- compressed air to winches
- collar power
- control power breaker

2.8.1.3 The hoist controls shall include a "deadman" foot switch and an "emergency-stop" push button.

2.8.1.4 The collar doors shall be operated from the collar control station.

2.8.1.5 The hoist shall have a dynamic brake control system with a rheostat to increase motor torque while decreasing maximum speed.

2.8.1.6 The hoist shall have limit switches to prevent high and low overtravel. These switches shall shut off control power and set the brakes when activated.

2.8.1.7 The hoist control panel shall include controls to override the limit switches so the hoist can back out of the overtravel position.

2.8.1.8 Panel indicator lights shall be provided to inform the hoist operator of the status of the hoist system.

2.8.1.9 The galloway control panel shall have controls to permit up and down travel of either winch, separately or together.

2.8.1.10 Panel indicator lights shall be provided to inform the hoist operator of the operation of both winches.

Working Copy

2.8.1.11 The AIS hoist, shall have a Lilly Controller and related limit switches that prevent high and low overtravel, and overspeed.

2.8.2 UH03 Air Intake Shaft

2.8.2.1 The AIS shall include instrumentation to measure shaft closure, near field hydrologic properties, permeability, brine inflow and ultrasonic velocity.

2.9 Interfacing System Requirements [**All Shafts & Hoists, Refer to Chapter G**]

2.10 Quality Assurance Requirements [**All Shafts & Hoists, Refer to Chapter G**]

2.11 Codes and Standards Requirements [**All Shafts & Hoists, Refer to Chapter G**]

2.12 Reliability Assurance Requirements [**All Shafts & Hoists, Refer to Chapter G**)**

3.0 DESIGN DESCRIPTION

3.1 Summary [**All Shafts & Hoists, Refer to Chapter G**]

3.2 Detail System Description [**All Shafts & Hoists, Refer to Chapter G**]

3.2.1 UH02 AIS Hoist System Description

3.2.1.1 The AIS Hoist system is a single drum, electric driven hoist, with three different braking systems. (See Figure UH I-1)

3.2.1.1.1 Motor M1 is automatically controlled to run the hydraulic pump and maintain the pressure in the accumulator. This pressure is used to release the main brake on the drum and also lubricates some bearings. The accumulator pressure displaces a piston that lifts a weight to maintain pressure on the system. A limit switch senses the position of the piston and shuts down the hydraulic pump at piston top of travel. A second limit switch restarts the hydraulic pump at piston low end of travel.

3.2.1.1.2 The main brake on the hoist drum is set by a weight and released by hydraulic pressure acting on brake piston P1. When the operator depresses the dead man foot switch, solenoid S2 is energized and activates a cam that allows piston P1, when pressurized, to lift the weight and release the brake. Piston P1 is pressurized when the operator positions the manual brake lever to the release position.

Working Copy

3.2.1.1.3 If the deadman switch is released solenoid S2 will disconnect the brake piston from the brake lever and the weight will set the main drum brake.

3.2.1.1.4 A second set of brakes is released electrically when the hoist control joy stick is moved from the neutral position. This is accomplished by energizing motors M2 and M3 which produces a hydraulic force to raise two connecting rods to compress the spring actuated brakes on the drive motor brake drums. When power is removed from the motor the connecting rods return to the relaxed position and the springs set the brakes.

3.2.1.1.5 A third type of braking is provided with dynamic braking. DC power can be applied to the AC drive motor that will slow the hoist. Dynamic braking is applied by a finger control switch mounted in the handle of the hoist control lever. Depressing the dynamic braking switch will remove AC from the motor and apply DC power. Positioning the control lever back toward neutral will increase the amount of dynamic braking.

3.2.1.1.6 Oil from the accumulator (Step 3.2.2.1.1) is filtered and delivered to four bearing sets on the hoist. Valves V1, V2, V3, and V4 are used to throttle the oil pressure down to a drip feed suitable for bearing lubrication. Return lines for the lubricating oil from the bearings to the reservoir exist but are not shown on the simplified schematic.

3.2.1.1.7 A mechanical Lilly controller is driven by chain and gearing from the drum shaft. The Lilly gearing is designed so that the main cam wheel makes slightly less than one revolution for the full travel of the conveyance.

3.2.1.1.8 Cams mounted on the Lilly cam wheel provide automatic stops at the extremes of travel of the hoist.

3.2.1.1.9 A mechanical governor mounted on the Lilly senses speed of the hoist and provides overspeed stops of the hoist if the conveyance approaches end of travel without slowing down. This same governor will stop the hoist if an overspeed condition occurs anywhere in the shaft.

3.2.1.1.10 A pulse encoder/tachometer generator system is attached to the hoist headsheave. This system is used to indicate rope speed, conveyance position and distance to work deck information to the operator and the control system. The distance to work deck indication is reset to zero automatically when the conveyance is at the work deck. The position indication information is reset when the conveyance is at a known location in the headframe.

3.2.1.1.11 A mechanical indicator dial is part of the Lilly and positioned such that the operator can visually monitor the position of the conveyance using this device in addition to his other indications of position.

Working Copy

3.2.1.2 The AIS Galloway is a separate work deck system positioned by two electric driven winches. Each of the winches are equipped with two different braking systems. (See Figure UH I-2)

3.2.1.2.1 Compressed air is required to operate the galloway winch brakes. The compressed air is supplied by either a self contained electric driven compressor or by the plant air system. Both of these supplies are described in CA00 SDD and are shown on Figure UH I-2 only for completeness.

3.2.1.2.2 The galloway winch drums are driven by electric motors via gear reduction boxes and open gears. When motor power is applied to drive the drums, internal motor brakes are released.

3.2.1.2.3 Simultaneously with energizing the drum motors, solenoids S1 and S2 are energized allowing compressed air to operate air pistons which release the spring set drum brakes.

3.2.1.2.4 When the hoist/lower switch handle is released, it returns to the neutral position and removes electrical power from the drive motors and S1 and S2. The brakes in the motor set. The solenoids vent the air pressure from the air pistons and the spring actuated drum brakes set.

3.2.1.2.5 In each air line to the brake piston is a filter, a regulator to control the air pressure, an oiler to lubricate the air piston, and the control solenoid.

3.2.1.2.6 Valve V3 is used to vent/drain the moisture from the air line.

3.2.1.2.7 A pulse encoder/tachometer system is installed on one of the galloway headsheaves. It functions to provide a galloway depth indication to the operator. It also works with the main hoist encoder to indicate the distance between the conveyance and the galloway work deck. The galloway digital position indicator is reset periodically manually using the hoist position indicator as the reference.

3.2.1.3 A representative installation of the pulse encoders are shown in Figure UH I-3.

3.2.1.3.1 The pulse encoder consists of a pulse generator driven by a rubber wheel which in turn is driven by the device being monitored.

3.2.1.3.2 The pulse encoder's output is multiple square waves that allow electronic circuits to count pulses to determine speed and distance.

3.2.1.3.3 The multiple square wave output can also be interpreted by electronics to determine direction of rotation.

Working Copy

3.2.1.4 The AIS Auxiliary Hyde winch is an electric driven, single drum winch in position to raise and lower material to the work deck if needed. The rope must be unwound from its drum and installed over its sheave on the headframe to use this winch. The drum brakes are air operated to release, spring operated to set, similar to the brakes of the galloway winches. See Figure UH I-4.

3.2.1.4.1 Air is supplied from the CA system through a filter, a regulator and a solenoid to the air piston that releases the brakes.

3.2.1.4.2 When the forward or reverse push button is depressed on the control panel, power is applied to the drive motor, and to the solenoid to power the drum and to release the brakes.

3.2.1.4.3 The auxiliary winch operates at a single speed, approximately 10 feet per minute.

3.2.1.5 The AIS collar horizontal doors are opened by air cylinders. Air to the cylinders are controlled by a manual valve mounted on a column at the collar station. Lights indicate whether the collar doors are fully open. The collar doors are electrically interlocked with the hoist Lilly controller to prevent hoisting above approximately 150 feet from the collar with closed collar doors.

3.2.2 UH03 AIS Shaft System Description

3.2.2.1 The AIS Shaft System extends from the surface to the underground facility for the main purpose of carrying air for the underground ventilation system. A subcollar is included in the collar design whereby shaft utilities can be transitioned into the shaft from below the collar level. This design also allows for the future construction of an air inlet connection from the side of the shaft rather than directly down the shaft. (See Figures UH I-5 and UH I-6.

3.2.2.2 Shaft furnishings include communications and instrumentation conductors, a 2-inch water supply line, a 3-inch shaft water drain line, and a 6-inch compressed air line. The 2-inch water supply line is used for grouting maintenance and drilling. The 6-inch compressed air line is part of CA00.

3.2.2.3 The shaft is equipped with experimentation and data acquisition devices which include those for measuring shaft closure, near field hydrologic properties, testing and monitoring of permeability, and brine inflow. These systems are described in SDD EM00.

3.2.2.4 Water rings are installed in the shaft liner for collection of the shaft water seepage.

Working Copy

3.2.2.5 Outlet couplings with bull plugs exist on the 6 inch air line approximately every 150 feet in the shaft.

3.2.2.6 There are support rings approximately every 60 feet in the shaft to support instrument and power cables. Power cables are installed and removed as the galloway is lowered and raised.

3.3 System Performance Characteristics [**All Shafts & Hoists, Refer to Chapter G**]

3.3.1 UH02 Air Intake Shaft Hoist

3.3.1.1 The AIS hoist moves a mancage through the AIS to service the shaft. It is also used as a backup for egress of personnel from the underground in emergency situations.

3.3.1.2 The AIS hoist can accommodate six people or a payload of 2,000 pounds.

3.3.1.3 The AIS hoist speed is controlled in seven discrete steps to a maximum speed of approximately 800 FPM. Exact speed on each step is determined by the direction of travel and load. The acceleration is controlled by the hoistman.

3.3.1.4 This subsystem also provides a multi-deck work platform called the galloway for use in inspecting and maintaining the shaft. This platform is positioned in the shaft by two independent winches that can operate separately to level the platform, or together to move the platform up or down.

3.3.1.5 The galloway has a very slow travel speed and is not generally used to transport personnel. However personnel are required on the work deck when repositioning it.

3.3.1.6 This subsystem has an auxiliary winch that can be used for shaft construction or moving equipment on the shaft collar. The rope for the auxiliary winch is normally stowed on its drum. The rope must be strung over its sheave when its use if required.

3.3.1.7 The AIS hoist and the galloway can be operated by a single individual from the Operator's Station.

3.3.1.8 This subsystem has its own dedicated air compressor to supply operating air to the collar doors and galloway winch brakes. Plant air is available as a backup.

Working Copy

3.3.1.9 The mancage can pass through the galloway; however, it must be guided by personnel on the galloway.

3.3.1.10 The location of the mancage in the shaft is determined by an indicator dial on the Lilly, a digital readout from an electronic position indicator system, and a scale on the hoist drum, all of which are visible to the hoist operator from the hoist control booth.

3.3.1.11 The location of the galloway in the shaft is determined by an electronic position indication system that monitors sheave rotation at the headframe. Readout is a digital position indicator at the hoist operator control station.

3.3.1.12 The distance between the mancage and the galloway is indicated digitally at the hoist operator's control station.

3.3.1.13 When not in use, the galloway shall be moved to the unlined portion of the shaft or parked at the station.

3.3.1.14 When not in use, the mancage shall be raised up into the headframe and parked to prevent personnel from entering.

3.3.2 UH03 Air Intake Shaft

3.3.2.1 The performance characteristics of the AIS are primarily related to the ventilation system. Flow rates under various flow conditions are described in SDD VU00.

3.3.2.2 When personnel are working in the shaft, the underground ventilation system shall not exceed 300,000 CFM.

3.4 System Arrangment [**All Shafts & Hoists, Refer to Chapter G**]

3.4.1 UH02 AIS Hoist System Arrangement

3.4.1.1 The Hoist control room is elevated approximately 4 feet above the main floor level of the hoist house. Inside the control room are all the necessary controls to operate the hoist, and the galloway. The shaft doors can only be operated from the collar station.

3.4.1.2 The Lilly control unit for the main hoist is mounted at the control window height to optimize the operator's view of the dial indication of the conveyance position.

3.4.1.3 The relative position of the hoist house, the galloway winch house and the shaft are as shown on Figure UH I-7.

Working Copy

3.4.2 UH03 AIS System Arrangement

The AIS varies in diameter, and in the outer wall covering as shown on Figures UH I-5 and UH I-6.

3.5 Component Design Description [**All Shafts & Hoists, Refer to Chapter G**]

3.5.1 UH02 AIS Hoist Component Design Description

3.5.1.1 The hoist operators console (See Figure UH I-8) is the main control panel that the operator uses to control the hoist. It has a vertical section and a horizontal section.

3.5.1.1.1 There are three digital readout devices to indicate conveyance depth, distance to work deck, and hoist rope speed. The top row of the digital devices is the indication area. The bottom two rows contain the key pads used for setup purposes.

3.5.1.1.2 All of circles on Figure UH I-8 with letters in the center are incandescent indicating lights. The letter indicates the color of the lens cover for all but the audible/visual alarm light emitting diode (LED). The bulb can be tested by pushing the lens cover.

3.5.1.1.3 The alarm device in the lower left hand corner produces an audible signal when certain alarm conditions occur. In the center of the audible alarm is a red LED that energizes when the alarm sounds.

3.5.1.1.4 The Dynamic Brake Amps Adjust device is a rheostat used to control the maximum dynamic braking current.

3.5.1.1.5 All of the selector switches are snap action switches. All of the push button switches are spring return to the normal position except for the emergency stop switch. The emergency stop switch must be pulled out to reset.

3.5.1.2 The main hoist control device is a mechanical lever that functions with electrical contacts to cause the conveyance to raise or lower, to control the speed, and degree of dynamic braking.

3.5.1.2.1 A rocker switch exists in top side of the lever that activates dynamic braking.

3.5.1.2.2 The lever stays where placed. It does not return to the center position when released.

3.5.1.3 The main hydraulic pump that supplies hydraulic pressure to operate the brakes and pressurized oil to the bearings for the main hoist is driven by a 2-horse power electric motor.

Working Copy

3.5.1.3.1 The electric motor is connected to run on 3-phase, 460 volts AC power, and runs at 1,725 RPM.

3.5.1.3.2 The hydraulic pump is a positive displacement gear pump.

3.5.1.4 The accumulator that functions with the hydraulic pump to maintain pressure in the system is a large structure that houses the piston, cylinder, and weights. The overall size of the structure is approximately 2 feet, by 2 feet, by 9 feet tall.

3.5.1.4.1 There are two weights on either side of the piston cylinder that measure approximately 18 inches, by 6 inches, by 3 feet. These weights are lifted by the piston and maintain hydraulic pressure during the down cycles of the hydraulic pump, and minimize pressure surges in the system when the hydraulic pump is running.

3.5.1.4.2 There are limit switches mounted on the structure that start and stop the hydraulic pump at the travel extremes of the piston.

3.5.1.5 There are two different mechanical braking systems associated with the AIS hoist.

3.5.1.5.1 The parallel post brake shoes operate directly on the hoist drum brake ring. Together the two shoes cover approximately 2/3 of the circumference of the drum flange. The shoes are approximately 12 inches wide. The brake material is approximately 1 inch thick and is backed with steel.

3.5.1.5.2 There are two pinion brakes that operate on brake drums attached to the pinion shaft driven by the hoist drive motor. These shoe brakes are spring loaded to set and are released by a thruster piston mechanism.

3.5.1.5.3 The thruster piston mechanism is a cylinder device with an electric motor mounted on top. When the motor is energized, it runs a small pump in the bottom of the cylinder that generates a hydraulic pressure to raise two piston rods. When the motor is de-energized, spring forces drive the piston rods back to the a piston in a cylinder. The return of the piston rods occurs slowly so that sudden stops of the conveyance do not occur.

3.5.1.6 The Lilly controller is mechanical device that monitors the speed and position of the AIS hoist conveyance. Some of the key features are listed below.

3.5.1.6.1 The Lilly is driven by a chain and gearing connected to the hoist drum shaft on the brake ring side. The gearing is designed so that the main cam wheel makes slightly less than one revolution for the full travel of the conveyance.

Working Copy

3.5.1.6.2 Cams mounted on the cam wheel provide track limits at the extremes of travel of the cage.

3.5.1.6.3 A mechanical governor mounted on the Lilly senses speed of the hoist and provides overspeed protection. The mid-shaft overspeed setting is slightly above full speed. The overspeed trip point is lowered by the retard cams as the conveyance approaches shaft limits.

3.5.1.6.4 A mechanical dial indicator is connected to the Lilly and positioned such that the operator can monitor the position of the cage.

3.5.1.6.5 Some features of the Lilly controller are not needed in this application and have been disconnected.

3.5.1.7 In the hoist house control room above the operators head is a combination audio/visual signal panel. The collar signal is a single-stroke bell, and the shaft signal is a continuous bell. The work deck signal is a buzzer, and the station signal is a horn. The color of the signal lights are as indicated. See Figure UH I-9.

3.5.1.8 The galloway winch operator's console (See Figure UH I-10) is the control panel that the operator uses to position and level the work platform.

3.5.1.8.1 The digital readout device indicates depth of the galloway lower deck. The top row is the indication area. The bottom two rows contains the key pads used for setup purposes.

3.5.1.8.2 The winch select and the winch control joy sticks are spring return to the mid position.

3.5.1.8.3 The circles with colors indicated in their center are incandescent indicating lights. The bulbs can be tested by depressing the lens covers.

3.5.1.8.4 The reset and the emergency stop buttons are spring return push button switches.

3.5.1.8.5 The meters in the upper left and right hand corners indicate motor amperes for their respective winch.

3.5.1.9 The main hoist is 1 1/4 inch right regular lay rope. One of the galloway winch ropes is 1 inch right regular lay, the other is 1 inch left regular lay.

3.5.1.10 The conveyance is approximately 10 feet high, by 5 feet wide, and 4 feet deep. It has the capacity to hold 6 people and has a payload of 2,000 pounds. It is guided by two 1 inch guide ropes that pass through two bronze bushings on each side of the conveyance. The guide ropes are attached to

Working Copy

the bottom of the shaft with pins anchored in concrete. Tension adjusters in the headframe compensate for changes in the guide rope length caused by temperature changes.

3.5.1.11 The collar doors are opened by two air cylinders on each door. When in the open position they are in a vertical position and serve as a barrier to prevent accidental access to the shaft. They are covered with grating material that allows air flow through the doors when in the closed position.

3.5.1.12 The auxiliary winch is located on the east side of the head frame.

3.5.1.12.1 The auxiliary winch rope is 7/8 inches in diameter.

3.5.1.12.2 The controls for the winch consist of a forward button, reverse button, stop button, a reset button, and on/off disconnect switch. The winch travels at one speed, approximately 20 feet per minute, that varies depending on the number of wraps on the drum. (See Figure UH I-11)

3.5.1.12.3 The sheave is 32 inches in diameter. There is a second sheave on the west side that is the same size.

3.5.1.12.4 A 25-horsepower 3 phase, 440 volt motor powers the winch.

3.5.1.13 The headframe is approximately 10 feet X 12 feet, and 51 feet high. It supports five sheaves to position hoist and winch ropes over the shaft. The center sheave is 84 inches in diameter and supports the main hoist rope and conveyance. The two 30-inch diameter sheaves on either side of the main sheave support the galloway. The remaining sheaves are 32 inches in diameter, are oriented 90 degrees from the other sheaves and are used to support the auxiliary winch ropes.

3.5.1.14 The winches that position the galloway are driven by 40-horse power motors.

3.5.1.14.1 The winch drums are equipped with compressed air released, spring actuated band brakes.

3.5.1.14.2 The motors that drive the drums are equipped with internal electrically operated motor brakes.

3.5.1.15 The galloway is a single level work deck. The deck can be modified to change its diameter to four different values; 12 feet, 14 feet 7 inches, 15 feet 6 inches, and 18 feet. A ladder and a hatch door is provided to allow access to each deck. In the center of the bottom deck is a six foot square opening to allow passage of the conveyance through the work platform. The conveyance opening is covered by a pair of doors that open to the vertical position to allow passage of the conveyance and barrier protection to the

Working Copy

opening. The galloway is supported by two pair of lifting lugs and two rope slings. The level is surrounded by vertical posts and chain material to serve as an outer perimeter fence. The floor level is covered by expanded metal grating. Light stanchions, and equipment storage devices are provided.

3.5.2 UH03 AIS Shaft Component Design Description

3.5.2.1 The shaft is lined with nonreinforced concrete to the bedded salt interface. From the liner bottom a reinforced concrete key exists which extends into the shaft wall. Below the key from the salt/rock interface downward the shaft is unlined and unsupported. Some portions of the unlined shaft are covered with bolted mesh to control surface scaling.

3.5.2.2 Water collection rings are installed in the concrete liner, one each beneath the Magenta and Culebra Dolomites and one at the base of the key. The three rings are drained by a 3 inch diameter pipe which extends to the storage level.

3.5.2.3 Two chemical seal rings have been provided on the outside diameter of the key area to prevent leakage of ground water past the key.

3.5.3 Instrumentation and Control Information [**All Shafts & Hoists, Refer to Chapter G]**

3.5.4 UH02 I & C Information for the AIS Hoist System

A complete listing of I & C information is shown on Table UH I-1. A brief discussion of each of the items follows if the operation and purpose of the instrument is not obvious.

Items 3.2.2.1 through 3.2.210 refer to I & C instruments on the AIS Control Panel. Main Hoist Controls

3.5.4.1 The three digital indicators obtain their inputs from pulse encoders attached to the headsheave of the hoist, and one of the galloway headsheaves and the Lilly drive shaft.

The conveyance depth indicator is reset to zero automatically at the collar. The distance-to-work-deck indicator is reset to zero automatically when the conveyance is at the work deck. These position indicator devices have non-volatile memories so that the position indication information is not lost upon loss of power.

3.5.4.2 The approach warning indicator will warn the operator when the conveyance reaches a preset distance from the work deck, collar or station. The approach zone lights (Collar, Station, Upper, & Lower) will alert the operator

Working Copy

when the conveyance reaches a preset distance from those destinations. The overspeed warning indicator will sound if the hoist has not decelerated sufficiently by the time it is within the approach zones of the work deck.

3.5.4.3 The loss of Lilly alarm originates from the pulse encoder on the main headsheave and the pulse encoder on the Lilly drive shaft. If the determined speed difference between these two encoders is not within tolerance, the alarm is activated.

3.5.4.4 The audible/visual alarm will sound/indicate if either the overspeed warning relay, the Lilly loss timer relay, or the approach warning relay is energized.

3.5.4.5 The white accelerating contactor lights are hoist acceleration contactor indication lights and energize as different contactors close to short out resistance in the hoist motor armature circuit. The higher the number, the smaller the amount of resistance remaining in the armature circuit. When in the hoisting drive mode the more lights lit the faster the speed for a given torque developed by the motor. In the dynamic braking mode, the more lights lit the greater the dynamic braking. In the dynamic braking mode, the maximum number of contactors that can be closed is five. In the lowering drive mode, the contactors are energized by timers to accelerate quickly but avoid an overspeed condition.

3.5.4.6 The control system ready light energizes when the control interlocks to move the hoist are satisfied.

3.5.4.7 The operation selector switch is used to prevent application of drive power or the release the pony brakes, when in the test mode, in order to permit testing of the accelerating contactors.

3.5.4.8 The selector switch labels 5, 6, 7 are used to limit the torque/speed of the hoist. In position 7, all contactors that vary the armature resistance of the hoist motor are allowed to close. In position 6, contactor 7 is prevented from closing. In position 5, contactors 6 and 7 are prevented from closing.

3.5.4.9 The five position test switch is used to bypass certain interlocks to permit testing of others. In the off position, all interlocks are active. In the lower and upper overtravel test positions the hoist can be moved past the over travel limit switches on the Lilly. In the lower backout and upper backout positions the switch allows the hoist to be moved from the area between the Lilly overtravel and the Slack rope/Hoist track limit switches back to the normal operating range. The overtravel foot switch works in conjunction with the lower and upper backout positions of this switch.(Both must be operated to perform overtravel test/backout.)

Working Copy

3.5.4.10 The pony brake push button switch is used to energize and release the pony (pinion) brakes when controlling the hoist with the main brake.

3.5.4.11 The work deck and collar magnetic switches are used to update the position indication equipment, when the conveyance is at those locations.

3.5.4.12 The slack switch is a limit switch controlled by a wire cable stretched across the cable opening in the hoist house. If the rope payout is greater than the conveyance movement, the rope slack will contact the wire cable, operate the slack limit switch and stop the hoist.

3.5.5 UH03 I & C Information for the AIS Shaft System

There is no I & C equipment associated with this subsystem.

Working Copy

TABLE UH I-1 AIS Hoist Instrumentation Controls & Interlocks

Instrument Numbers	Function	Type	Range	Accuracy	Setpoint	Instrument Sensor Location	Readout Location
Hoist Control Panel (Vertical Section)							
None	Conv Depth Ind	Digital	Six digits	± 0.1 ft	NA	Hoist Headsheave	Hoist Cont Pnl
None	Dist to Work Deck	Digital	Six digits	± 0.1 ft	NA	Hoist/Galway Hdshve	Hoist Cont Pnl
None	Hoist Rope Speed	Digital	Five digits	± 1 ft. Min	NA	Hoist Headsheave	Hoist Cont Pnl
None	Hoist Up Indication	Incandescnt	On/Off	NA	NA	Hst Drum Controller	Hoist Cont Pnl
None	Hst Lower Indication	Incandescnt	On/Off	NA	NA	Hst Drum Controller	Hoist Cont Pnl
None	Dyn Brking Activated	Incandescnt	On/Off	NA	NA	Hst Drum Controller	Hoist Cont Pnl
None	Approach Warning Ind	Incandescnt	On/Off	± .1 ft.	100 ft. Approx.	Control System	Hoist Cont Pnl
None	Overspeed Warning Ind	Incandescnt	On/Off	± 1 ft. Min	200 ft./Max in Approach Zone	Control System	Hoist Cont Pnl
None	Loss Lilly Indication	Incandescnt	5 digits	± 1 ft. Min	100 ft./Min Diff	Hoist/Lilly	Hoist Cont Pnl
None	Collar Approach Ind	Incandescnt	6 digits	± 0.1 ft. -100 ft.		Control System	Hoist Cont Pnl
None	Station Approach Ind	Incandescnt	6 digits	± 0.1 ft. -2000 ft.		Control System	Hoist Cont Pnl
None	Upper Approach Ind	Incandescnt	6 digits	± 0.1 ft. + 100 ft. Dist		Control System	Hoist Cont Pnl
None	Lower Approach Ind	Incandescnt	6 digits	± 0.1 ft. -100 Ft. Dist		Control System	Hoist Cont Pnl
None	Alert Operator	Audio/Visual	NA	NA	NA	Control System	Hoist Cont Pnl
None	Hst Torque Indication	Incandescnt	NA	NA	NA	Control System	Hoist Cont Pnl
Hoist Control Panel (Horizontal Section)							
None	Control Pwr Avail Ind	Incandescnt	On/Off	NA	NA	Control System	Hoist Cont Pnl
None	Control Sys Rdy Ind	Incandescnt	On/Off	NA	NA	Control System	Hoist Cont Pnl
None	Collar Doors Position	Incandescnt	On/Off	NA	NA	Hoist Platform	Hoist Cont Pnl
None	Ind Dyn Brk Amps	Meter	0-800 Amps	+/- 10%	NA	Control System	Hoist Cont Pnl
None	Ind Dyn Brk Volts	Meter	0 - 25 Volts	+/- 10%	NA	Control System	Hoist Cont Pnl
None	Ind Hst Motor Amps	Meter	0 - 600	+/- 10%	NA	Control System	Hoist Cont Pnl
None	Cont Dyn Brk Amps	Rheostat	11 - 17 Volts	NA	NA	NA	NA
None	Sel Oper Mode	Rotary Sw	Run/Test	NA	N/A	N/A	N/A
None	Limit Maximum Speed	Rotary Sw	3 Position	NA	NA	NA	NA
None	Test Switch	Rotary Sw	5 Position	NA	NA	NA	NA
None	Alert Operator	Flashing Lt	On\Off	NA	NA	Control System	Hoist Cont Pnl
None	Lilly Loss Reset	Spr Psh But	NA	NA	NA	NA	NA
Later	Release Pony Brk	Spr Psh But	NA	NA	NA	NA	NA
None	Emergency Stop Sw	Push Button	NA	NA	NA	NA	NA

Working Copy

TABLE UH I-1 AIS Hoist Instrumentation Controls & Interlocks (Continued)

Instrument Numbers	Function	Type	Range	Accuracy	Setpoint Location	Instrument Sensor Location	Readout Location
Signal Bell Panel							
None	Work Deck Signal	Light/Horn	On/Off	NA	NA	Hoist House/Work Dk	Hoist Bell Pnl
None	Collar Signal	Light/Horn	On/Off	NA	NA	Hoist House/Collar Hoist	Bell Pnl
None	Station Signal	Light/Horn	On/Off	NA	NA	Hoist House/Station Hoist	Bell Pnl
None	Shaft Signal	Light/Horn	On/Off	NA	NA	Hoist House/Collar Hoist	Bell Pnl
33P-HLS03/1	S Collar Door Open	Limit Switch	On/Off	NA	Fully Open	Collar Platform	Hoist Cont Pnl
33P-HLS03/2	N Collar Door Open	Limit Switch	On/Off	NA	Fully Open	Collar Platform	Hoist Cont Pnl
33P-HLS03/3	Limit Hoist Travel	Limit Switch	On/Off	NA	Hoist Track Lim	Head Frame	None
33P-HLS03/4	Stop Hyd Pump	Limit Switch	On/Off	NA	Up Lim	Accumulation	None
33P-HLS03/5	Start Hyd Pump	Limit Switch	On/Off	NA	Low Lim	Accumulation	None
33P-HLS03/6	Update Control Sys	Magnetic	On/Off	NA	1.5 ft.	Work Deck	None
33P-HLS03/7	Update Control Sys	Magnetic	On/Off	NA	4.2 ft.	Collar	None
33P-HLS03/8	Slack Rope	Pull Switch	On/Off	NA	Slack Rope	Hoist Rope Window	None
33P-FS03/1	Hoist Signals	Foot Switch	NA	NA	NA	Work Deck Hoist	Cont Pnl
33P-FS03/2	Hst Dead Man Control	Foot Switch	NA	NA	NA	Hoist Contrl Rm	NA
33P-FS03/3	Wnch Dead Man Control	Foot Switch	NA	NA	NA	Hoist Contrl Rm	NA
33P-FS03/4	By Pass Interlock	Foot Switch	NA	NA	NA	Hoist Contrl Rm	NA
None	Hst Up Travel Limit	Cam Operated	On/Off	1 foot	+38 ft.	Lilly Main Wheel	NA
Galloway Control Panel							
None	West Winch Amps	Meter	0 - 250 Amps	Class 2.5	NA	Control System	Galway Cont Pnl
None	East Winch Amps	Meter	0 - 250 Amps	Class 2.5	NA	Control System	Galway Cont Pnl
None	Wrk Dk Depth Ind	Digital	Six digits	± 0.1 ft.	NA	Winch Headsheave	Galway Cont Pnl
None	Control System Reset	Incandescnt	On/Off	NA	NA	Control System	Galway Cont Pnl
None	Winch Running Ind	Incandescnt	On/Off	NA	NA	Control System	Galway Cont Pnl
None	Winch Selector Sw	Sprng Rtn Joy	NA	NA	NA	NA	NA
None	Lower/Hoist Sw	Sprng Rtn Joy	NA	NA	NA	NA	NA
None	Emergency Stop Sw	Sprg Rtn Push	NA	NA	NA	NA	NA
None	Emer Stop Reset Sw	Sprg Rtn Push	NA	NA	NA	NA	NA
Auxiliary Winch Control Panel							
None	Run Winch Down	Sprng Rtn PB	NA	NA	NA	NA	NA

Working Copy

TABLE UH I-1 AIS Hoist Instrumentation Controls & Interlocks (continued)

Instrument Numbers	Function	Type	Range	Accuracy	Setpoint	Instrument Sensor Location	Readout Location
None	Run Winch Up	Sprng Rtn PB	NA	NA	NA	NA	NA
None	Stop Winch	Sprng Rtn PB	NA	NA	NA	NA	NA
None	Reset Control Cir	Sprng Rtn PB	NA	NA	NA	NA	NA
None	Elect Isolation	Rotary Switch	On/Off	NA	NA	NA	NA

Working Copy

3.6 System Interfaces [**All Shafts & Hoists, Refer to Chapter G**]

3.6.1 UH02 AIS Hoist Primary Interfaces

The AIS Hoist system requires service from the Electrical System ED00, the Plant Building, Facilities and Miscellaneous Equipment CF00, the Compressed Air System CA00, and the Plant Monitoring and Communication System CM00.

3.6.1.1 ED00

The AIS Hoist system needs power at 460 volts, three phase, 60 Hertz. The majority of the power is needed for the 400-horse power main hoist motor and the two 40-horse power galloway winch motors. Additional small loads, such as the hydraulic system pumps require 460 volt three phase power. Normal lighting, control system, and signaling system power at 115 volts, 60Hertz is required.

3.6.1.2 CF00

The CF00 System must supply the physical support structure for the main hoist house and the galloway winch house.

3.6.1.3 CA00

Compressed air is needed to release the brakes on the galloway winch system, and to open the collar doors of the AIS.

3.6.1.4 CM00

Backup communication between the hoist operator, the work deck personnel and the conveyance is accomplished with FM radios. The CM00 must supply at least three units to support the operation of the AIS Hoist when a man is in the conveyance and personnel are on the work deck.

Communication between the hoist operator and the stations is provide by the mine phone system. Mine phones must be provided at each location.

3.6.2 UH02 AIS Hoist Secondary Interfaces

The AIS Hoist system is a secondary interface with the EM00 system.

Working Copy

3.6.2.1 EM00

The AIS Hoist system is a secondary interface with the EM00 system because it provides access to the experiments in the AIS. The AIS hoist system also provides the platform for use in performing the maintenance and inspections of the air pipe and equipment of the CA00 system.

3.6.3 UH03 AIS Shaft Primary Interfaces

The AIS system requires service from the Electrical System ED00, and the Compressed Air System CA00, and Underground Ventilation System.

3.6.3.1 ED00

Electrical power and outlets are required in the shaft to support lighting and tools on the conveyance. A 480 volt, 3 phase circuit, and a 120 volt single phase circuit is required.

3.6.3.2 CA00

Compressed Air and outlets must be provided to support shaft maintenance.

3.6.3.3 VU00

The Underground Ventilation System provides air not to exceed 300,000 cfm, only one exhaust fan operating (alternate mode), when personnel are working in the AIS.

3.6.4 UH03 AIS Secondary Interfaces

The AIS t system provides services to the Compressed Air System CA00, and the Underground Ventilation System VU00.

3.6.4.1 CA00

The AIS provides the path and support base for the 6 inch airline that supplies backup compressed air to the AIS hoist system equipment to enable the CA00 system to perform its function.

3.6.4.2 VU00

The AIS provides the path for the majority of the incoming fresh air to the underground to enable the VU00 system to perform its function.

Working Copy

4.0 OPERATIONS [**All Shafts & Hoists, Refer to Chapter G**]

Refer to WIPP controlled operating procedures for the current prerequisite and procedures for the AIS Hoist and the galloway (Subsystem UH02)

5.0 SYSTEM LIMITATIONS, SETPOINTS, AND PRECAUTIONS [**All Shafts & Hoists, Refer to Chapter G**]

5.1 UH02 AIS Hoist System

5.1.1 Operating Limits

The operating limits which define the ambient design limits and the system and component limits are listed in Table UH I-2. Proper system and component operation can not be assured if these limits are exceeded.

5.1.2 Setpoints and Alarms, AIS Hoist System

The major setpoints involved in the controls of the AIS Hoist System are listed in Table UH I-3. All the system status and alarm signals are local.

5.1.3 Precautions AIS Hoist System

5.1.3.1 Personnel shall wear safety harnesses and lanyards when working in the subcollar area or on the galloway.

5.1.3.2 Cage doors shall remain closed when the conveyance is being hoisted or lowered.

5.1.3.3 The galloway should not be moved unless personnel are on the unit to monitor its satisfactory movement in the shaft.

Working Copy

TABLE UH I-2 OPERATING LIMITS AIS HOIST

PARAMETER	LIMIT
Working Depth	2160 Feet
Maximum Payload	2000 Pounds
Maximum speed (Controlled in seven discrete steps, exact speed in each step is determined by the direction of travel and load.)	800 FPM (approximately)

OPERATING LIMITS AIS GALLOWAY

Working Depth	2,160 Feet
Payload	2,842 to 11,610 Pounds Depends on Depth
Working Speed	18 to 24 Fpm Depends on Rope Layer

OPERATING LIMITS AIS WINCH

Working Depth	2,160 Feet
Maximum Payload	Later
Maximum Working Speed	10 Fpm

Note: Fpm = Feet Per Minute

Working Copy

TABLE UH I-3 CONTROL SETPOINTS AIS HOIST

PARAMETER	FUNCTION	SETPOINT
Approach Warning	See Below	Any approach zone entered
Collar Approach	Alert Operator	100 Feet Below Collar
Station Approach	Alert Operator	150 Feet Above Station
Upper Approach	Alert Operator	100 Feet Above Galloway
Lower Approach	Alert Operator	100 Feet Below Galloway
Overspeed Warning	Alert Operator	Spd more than 200 Fpm in approach zones.
Loss of Lilly	Shutdown Hoist	50 Fpm (Note 1)
Collar Door Position	Stop Conv before Closed Collar Door	150 Feet Below Collar
Hydraulic Pump Top Ls	Stop Hydraulic Pump	3* Inches From Frame Top
Hydraulic Pump Bot Ls	Start Hydraulic Pump	39* Inches Frm Frame Top
Hoist Rope Slack	Shutdown Hoist	14 Inches Below Taut Rope. (Note 2)
Hoist Top Stop	Shutdown Hoist	14* Ft Below Headframe Top Mech Stop
Hoist Bottom Stop	Shutdown Hoist	4* Ft Above Shaft Floor

Note 1 After a preset time delay, a speed difference between the lilly and the pulse generator greater than the set point will cause the trip.
Note 2 This is a nominal dimension. The clearance must be large enough to prevent tripping the slack switch when the conveyance is at the top stop.
* These may vary to suit operational conditions.

Working Copy

6.0 OFF-NORMAL EVENTS AND RECOVERY [**All Shafts & Hoists, Refer to Chapter G**]

Refer to the WIPP Site Off-Normal Events and Recovery Procedure for the AIS hoist and the galloway (Subsystem UH02). The off-normal events considered applicable for Subsystem UH02 are:

- AIS drive motor failure
- Brake failure in the set position on the AIS hoist
- Brake failure in the release position on the AIS hoist
- AIS galloway drive motor failure
- Brake failure in the set position on a galloway winch
- Brake failure in the release position on a galloway winch

7.0 MAINTENANCE [**All Shafts & Hoists, Refer to Chapter G**]

7.1 Maintenance Approach [**All Shafts & Hoists, Refer to Chapter G**]

7.2 Corrective Maintenance [**All Shafts & Hoists, Refer to Chapter G**]

Corrective maintenance, preventative maintenance, in-service inspection and predictive maintenance procedures for the AIS hoist are available as controlled documents through the WIPP Controlled Operating Procedures Program. The program includes special third party procedures applicable to hoist digital control system and hoist cables. The controlled maintenance program procedures are applicable to the following UH02, AIS hoist devices and UH03 AIS hoist shaft devices:

- Hoist Operators Console
- Galloway Winch Operator's Console
- Main Hoist Control Device
- Main Hydraulic Pump
- Accumulator
- AIS Hoist Brakes

- Lilly Controller
- Audio/visual Signal Panel
- Hoist and Galloway Regular Lay Ropes
- Conveyance
- Collar Doors
- Auxiliary Winch
- Headframe
- Galloway Winches
- Galloway
- UH03 Air Intake Shaft
- Concrete Liner and Rock Wall
- Air and Water Lines

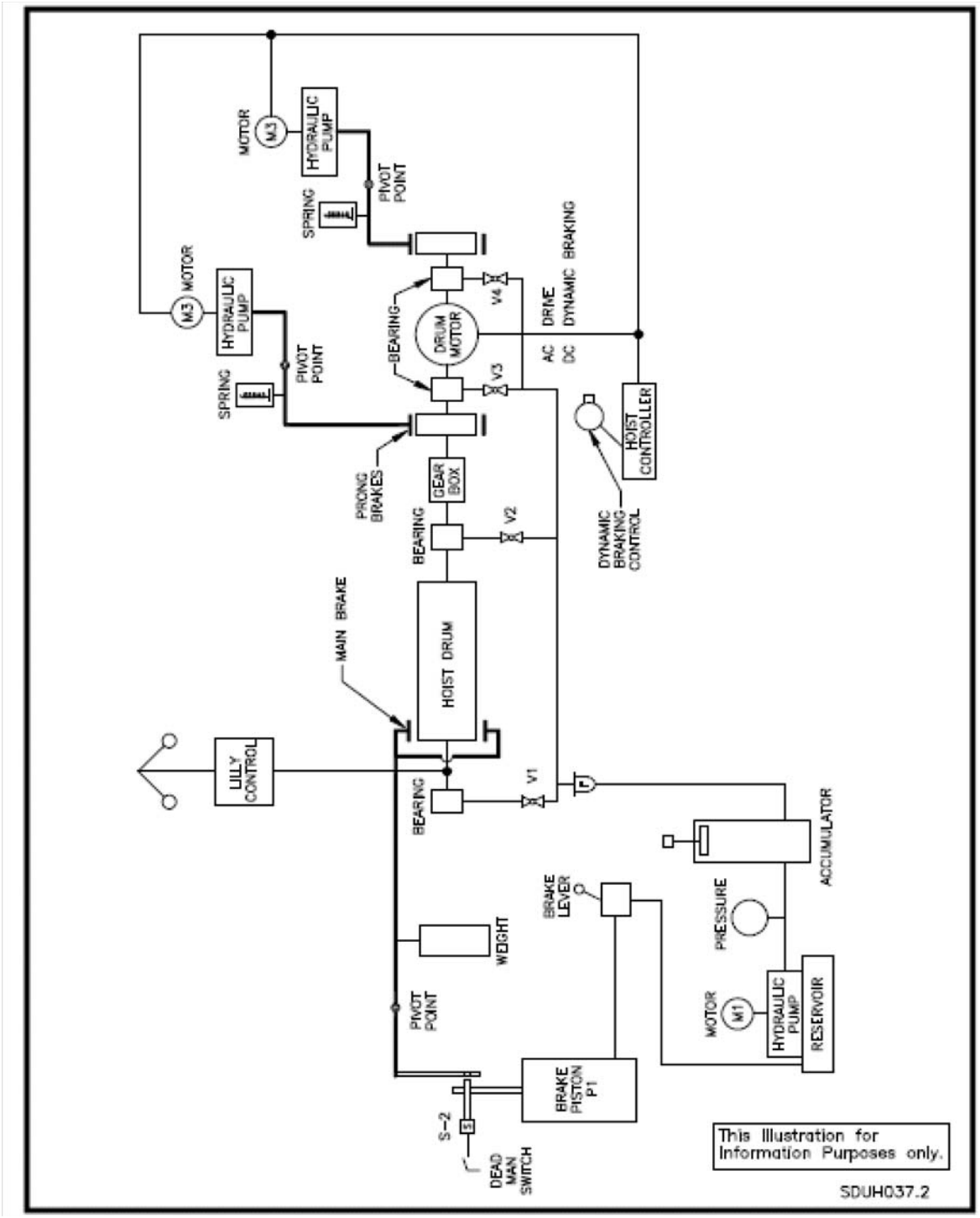

FIGURE UH I-1 AIS Hoist Simplified Diagram

Working Copy

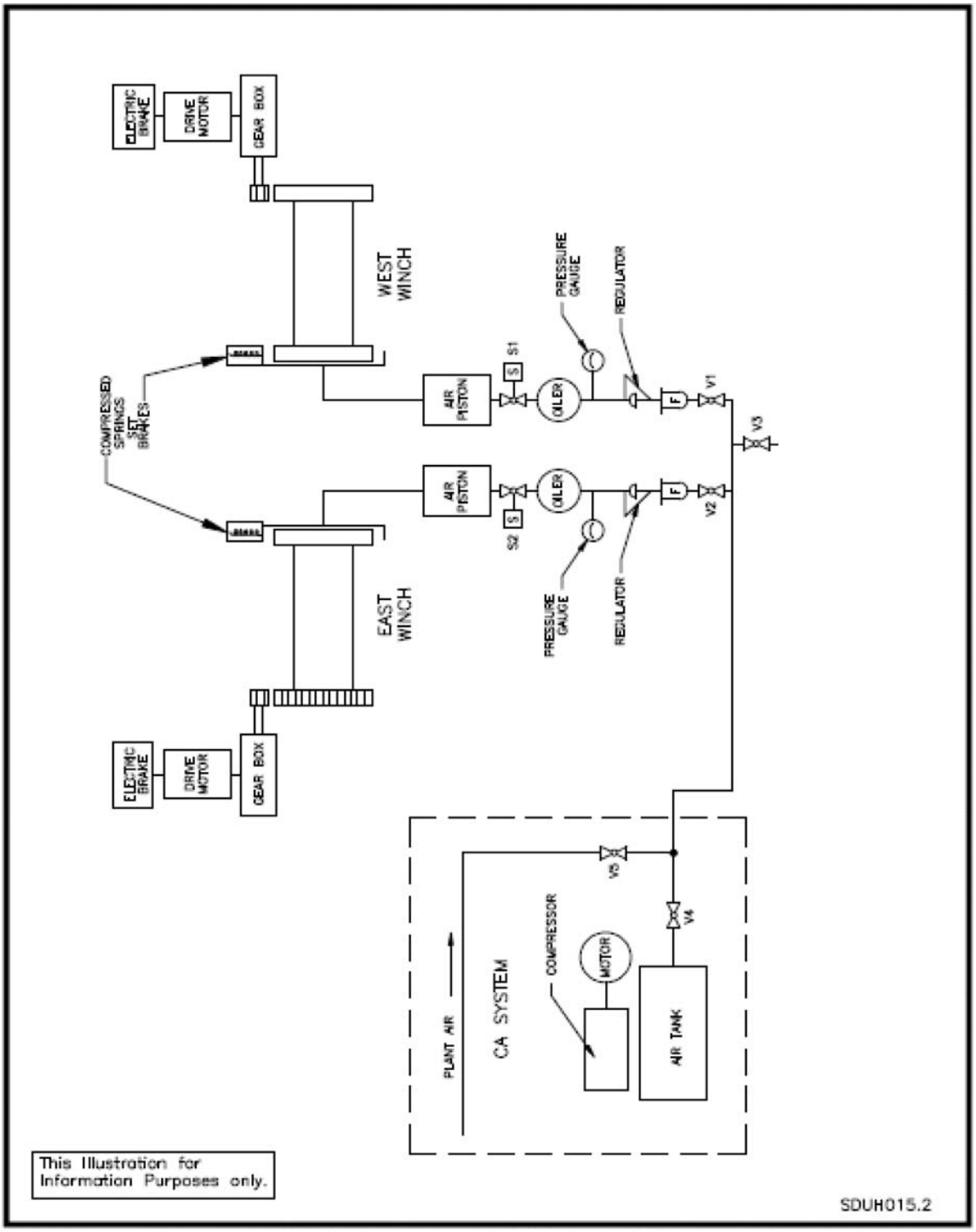

FIGURE UH I-2 AIS Galloway Simplified Diagram

Working Copy

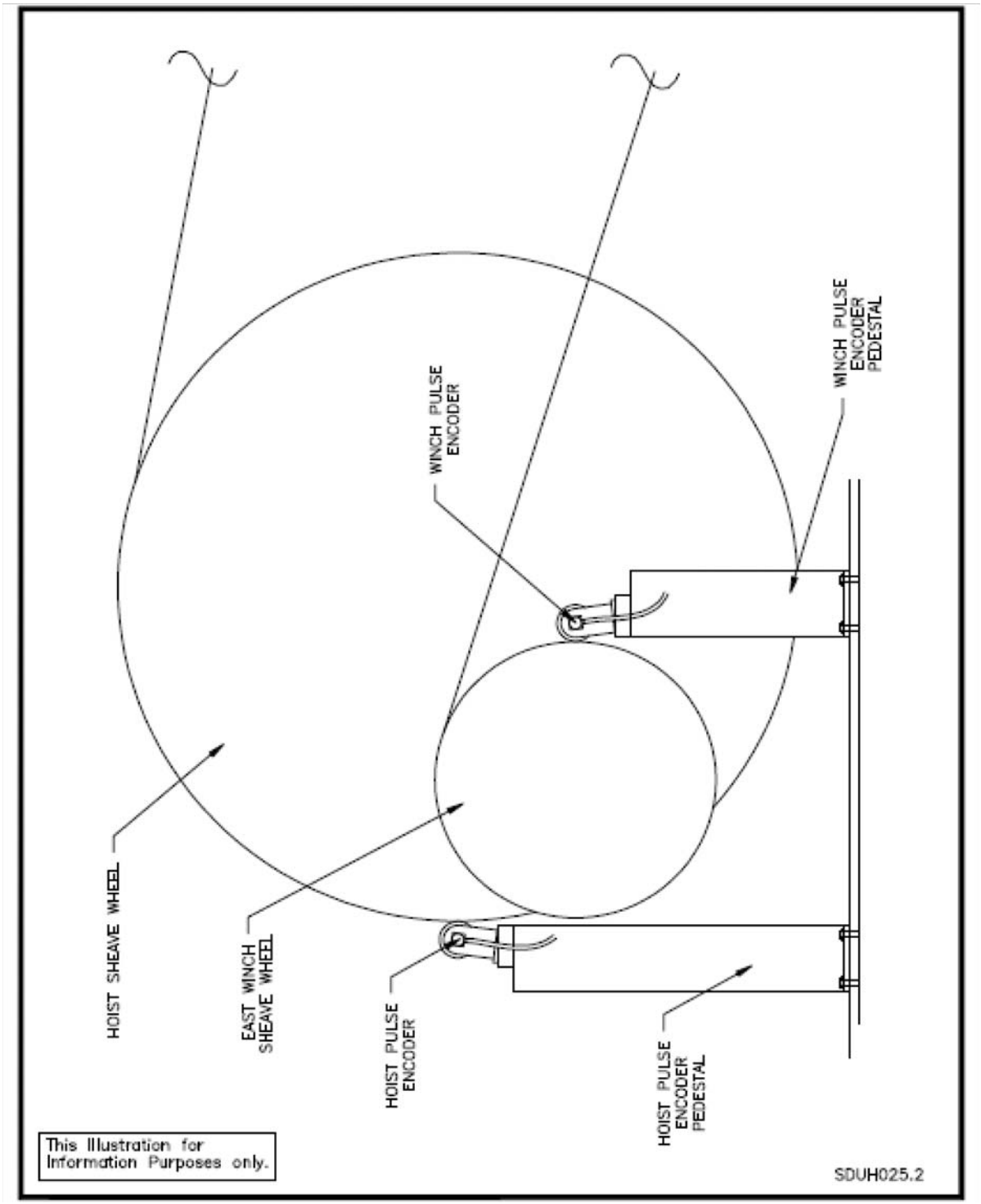

FIGURE UH I-3 AIS Pulse Encoders

Working Copy

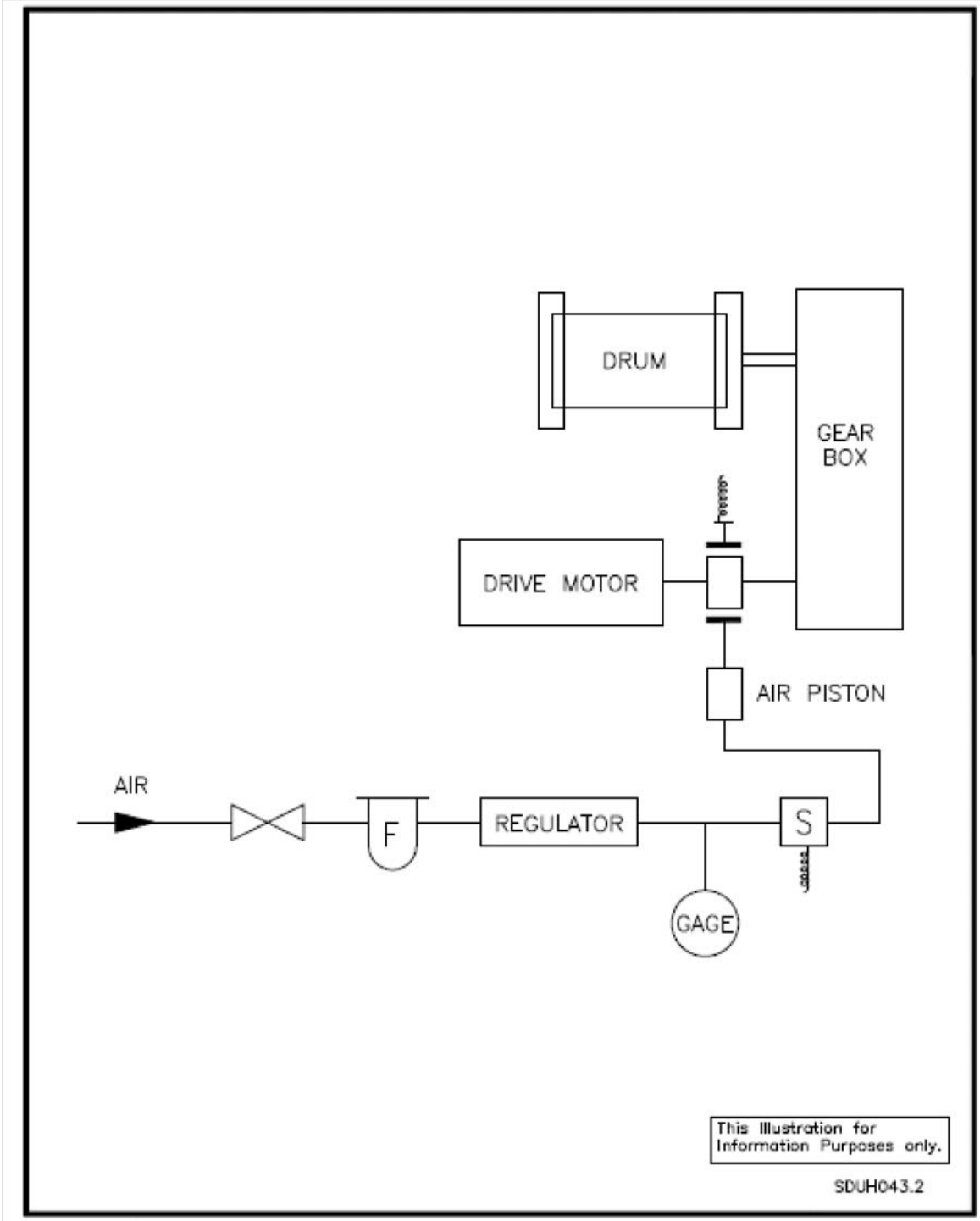

FIGURE UH I-4 AIS Auxiliary Winch Simplified Diagram

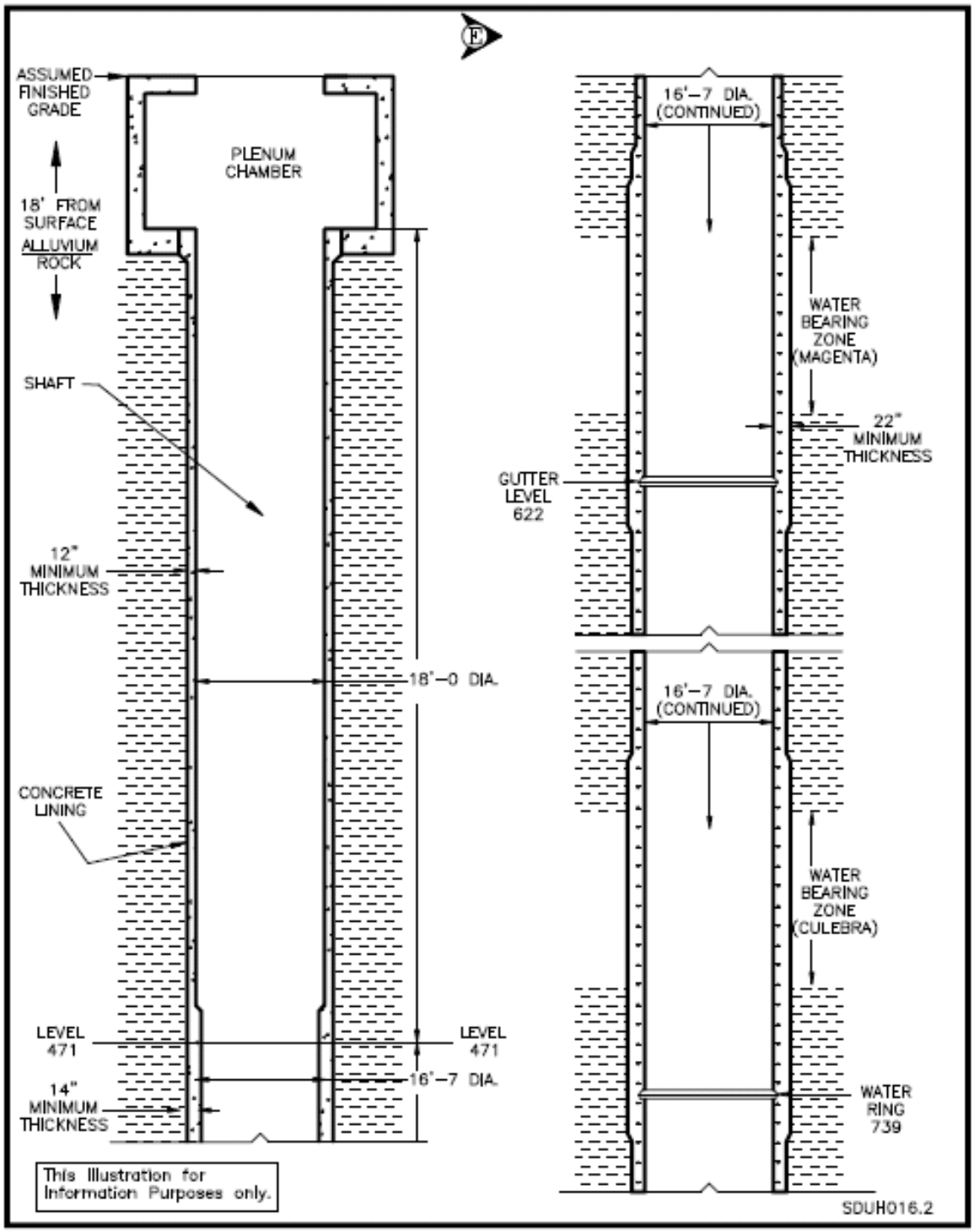

FIGURE UH I-5 Upper Sections, Air Intake Shaft

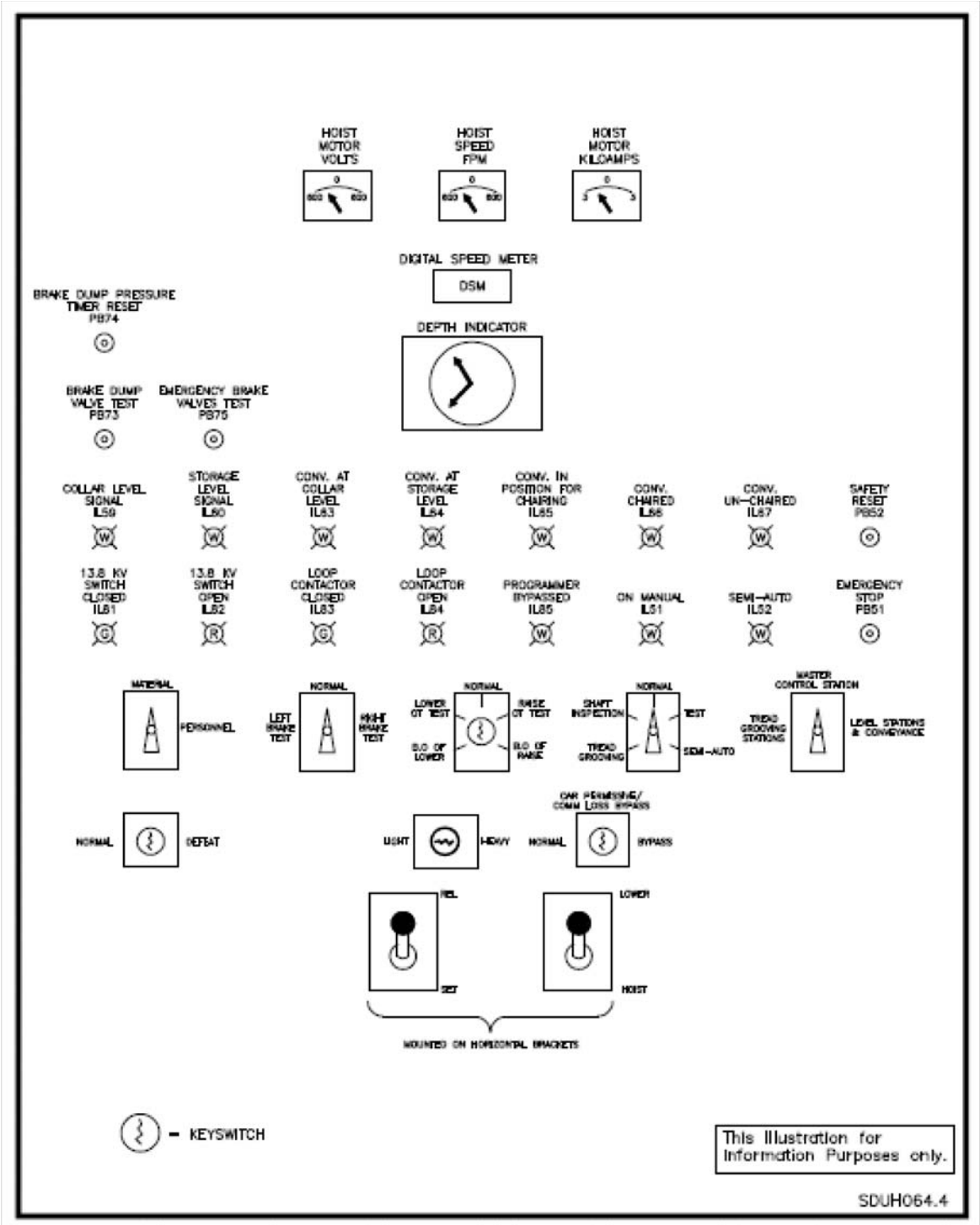

FIGURE UH I-6 Lower sections, Air Intake Shaft

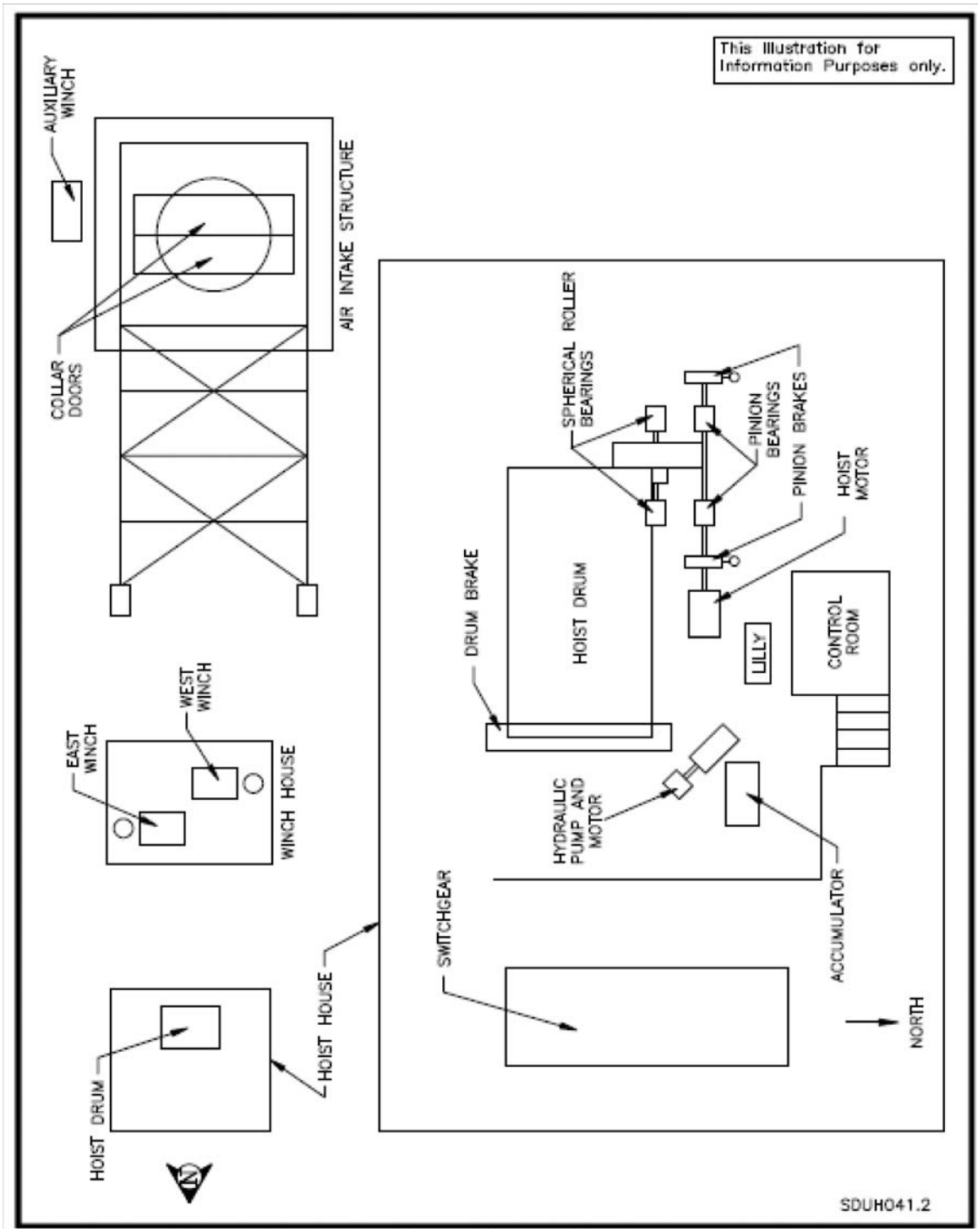

FIGURE UH I-7 AIS Hoist System Arrangement

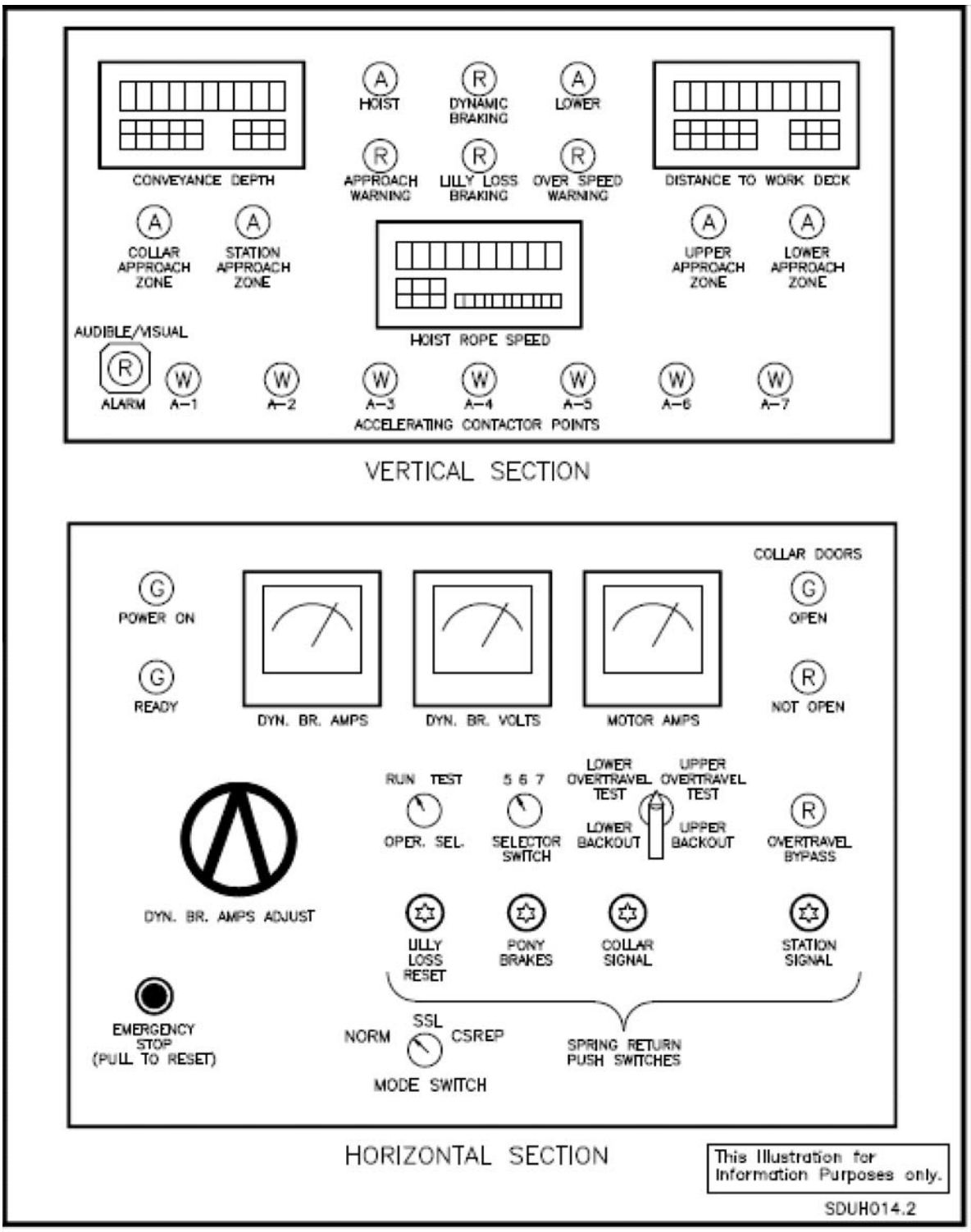

FIGURE UH I-8 AIS Hoist Operators Console

Working Copy

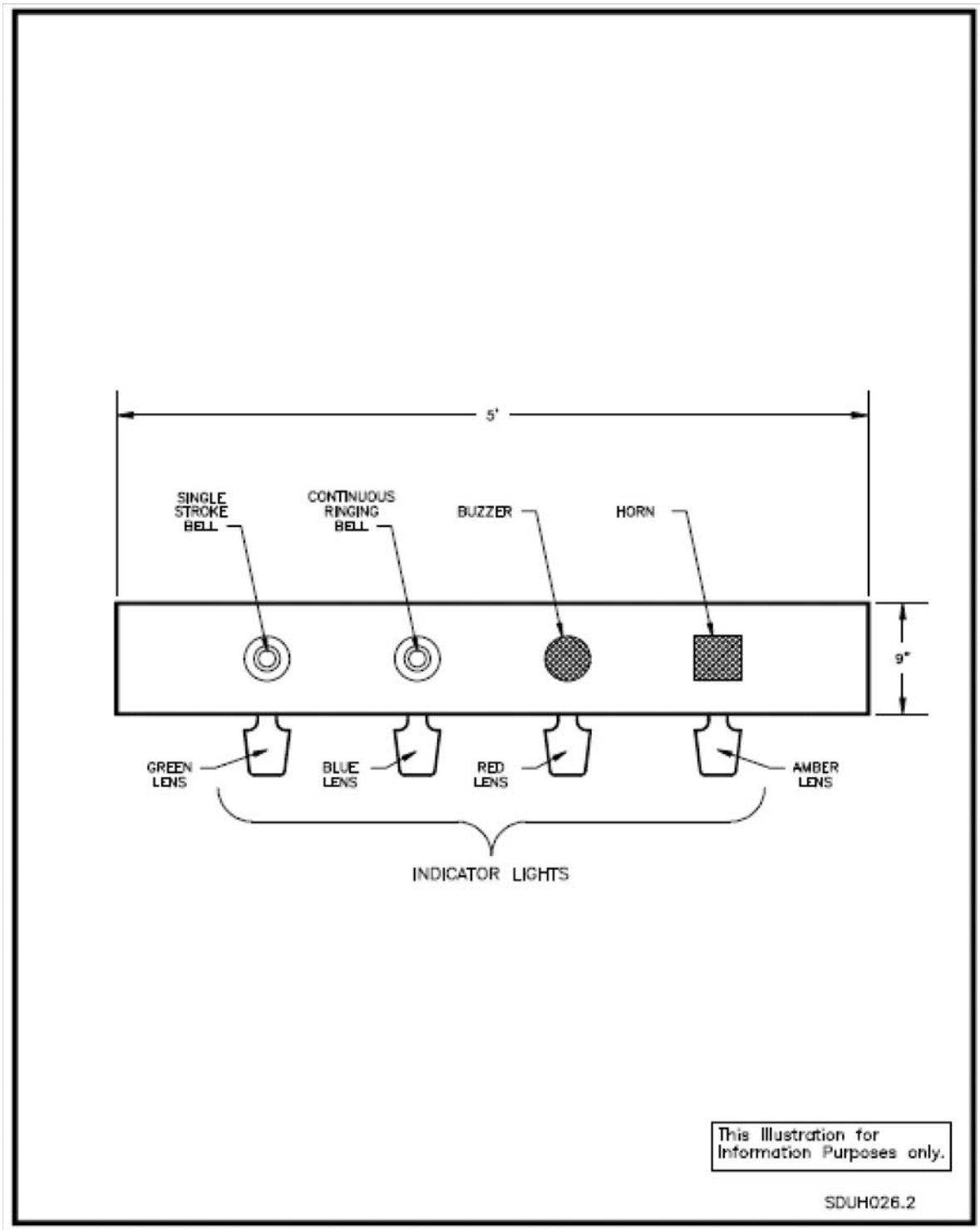

FIGURE UH I-9 AIS Signal Panel

Working Copy

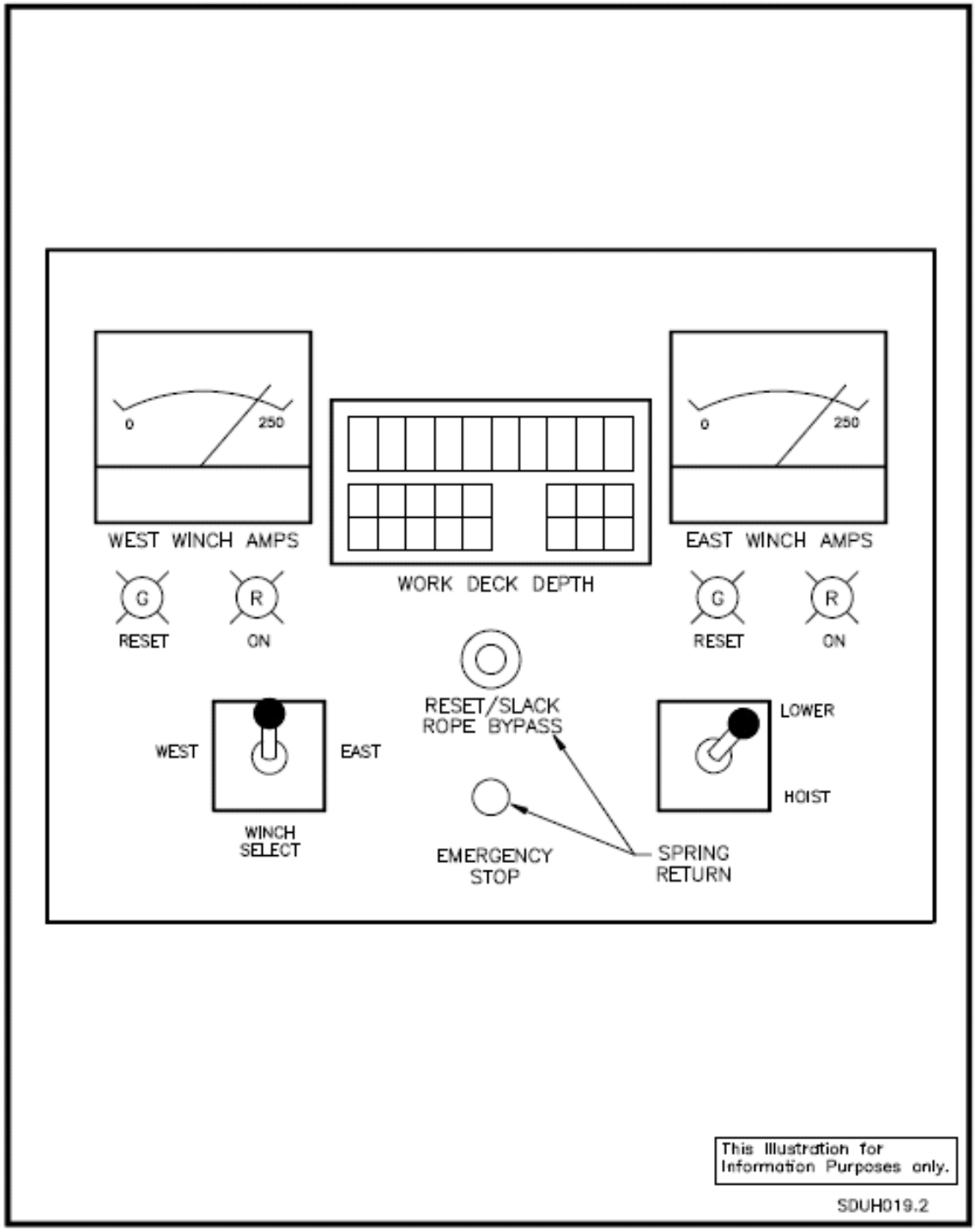

FIGURE UH I-10 Galloway Winch Operator's Console

Working Copy

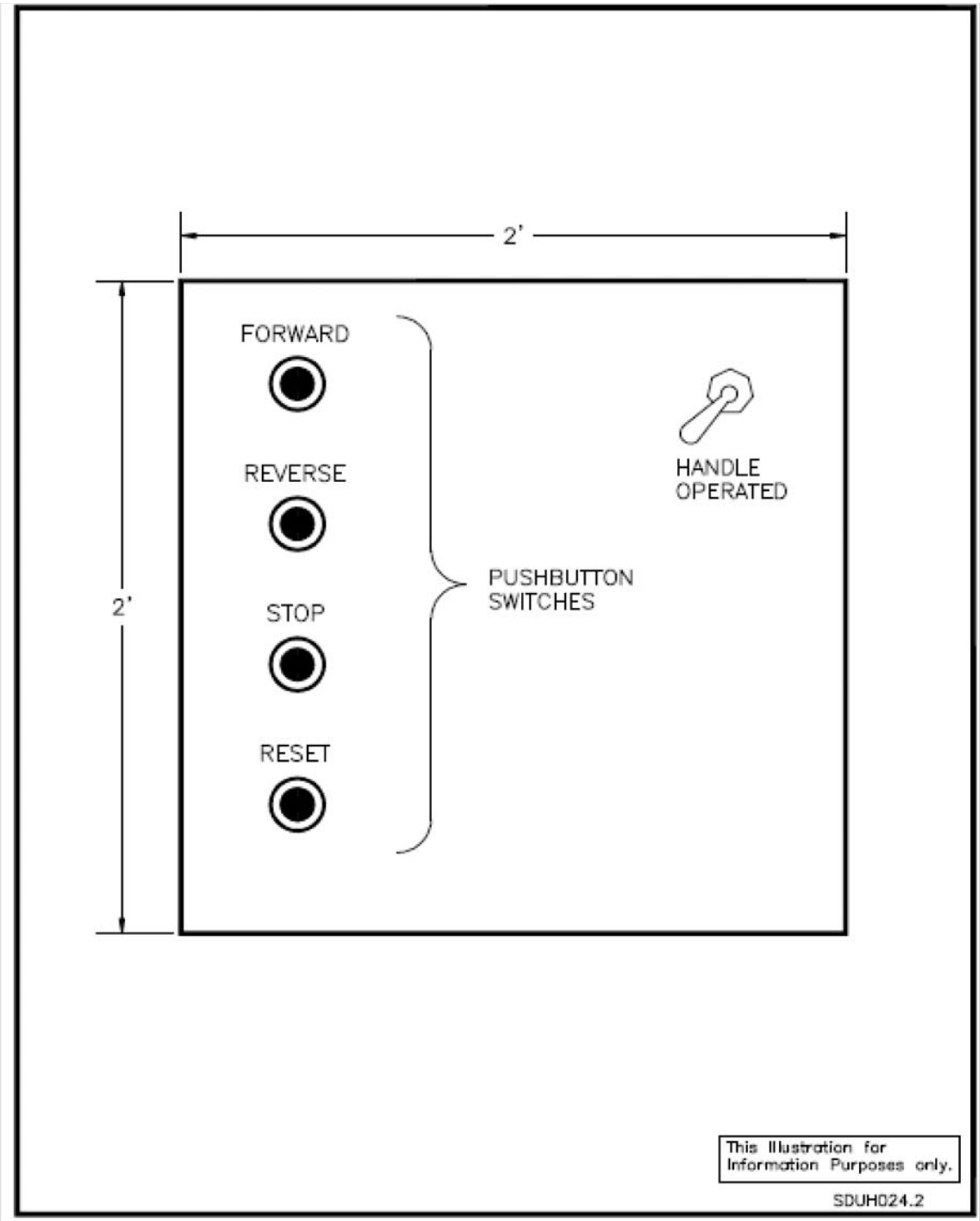

FIGURE UH I-11 AIS Auxiliary Winch Control Panel

Working Copy

Chapter II
Table of Contents

Subsystem UH04, Salt Handling Hoist
and
Subsystem UH05, Salt Handling Shaft

1.0 PRIMARY FUNCTIONS II-1

1.1 UH04 Salt Handling Hoist II-1

1.2 UH05 Salt Handling Shaft II-1

2.0 DESIGN REQUIREMENTS II-2

2.1 General Requirements II-2

2.2 Subsystem General II-2

2.3 Operational Requirements II-6

2.4 Structural Requirements II-6

2.5 General Arrangements and Essential Features II-7

2.6 Maintenance Requirements II-7

2.7 In-Service Inspections II-7

2.8 Instrumentation and Control Requirements II-7

2.9 Interfacing System Requirements II-10

2.10 Quality Assurance Requirements II-10

2.11 Codes and Standards Requirements II-10

2.12 Reliability Assurance Requirements II-10

3.0 DESIGN DESCRIPTION II-10

3.1 Summary II-10

3.2 Detail System II-10

3.3 System Performance Characteristics II-18

Working Copy

3.4 System Arrangement II-21

3.5 Component Design Description II-21

3.6 Instrumentation and Control Information II-28

3.7 System Interfaces II-40

4.0 OPERATIONS II-41

4.1 UH04 Salt Hoist & Handling Equipment II-41

5.0 SYSTEM LIMITATIONS, SETPOINTS AND PRECAUTIONS II-41

5.1 UH04 Salt Hoist System II-41

6.0 OFF-NORMAL EVENTS AND RECOVERY II-46

6.1 UH04 Salt Hoist II-46

7.0 MAINTENANCE II-46

7.1 Maintenance Approach II-46

7.2 Corrective Maintenance II-46

7.3 Preventive Maintenance II-47

7.4 In-Service Inspection and Predictive Maintenance II-47

Working Copy

List of Figures

Figure Page

FIGURE UH II-1 Salt Hoist Piping Diagram II-48

FIGURE UH II-2 Salt Hoist Brake Pistons II-49

FIGURE UH II-3 Salt Hoist MG-Set II-50

FIGURE UH II-4 Salt Handling Shaft and Headframe II-51

FIGURE UH II-5 Salt Conveyance Dump Action II-52

FIGURE UH II-6 Miscellaneous Salt Bin Information II-53

FIGURE UH II-7 Salt Loading Bins II-54

FIGURE UH II-8 Underground Salt Handling System II-55

FIGURE UH II-9 Salt Hoist House Arrangement II-56

FIGURE UH II-10 Sloping section Salt Hoist Control Panel II-57

FIGURE UH II-11 Horizontal Section Salt Hoist Control Console II-58

FIGURE UH II-12 Salt Hoist Annunciator Panel II-59

FIGURE UH II-13 Salt Hoist Bearing Temperature Panel II-60

FIGURE UH II-14 Salt Hoist RTD Temperature Panel II-61

FIGURE UH II-15 Collar Level Station Control Panel II-62

FIGURE UH II-16 Salt Loading Bin Control Panels II-63

FIGURE UH II-17 Salt Bin Air Blaster Operation II-64

Working Copy

List of Tables

Table Page

TABLE UH II-1 Salt Hoist Instrumentation Controls & Interlocks II-35

TABLE UH II-2 Salt Shaft Instrumentation Controls & Interlocks II-39

TABLE UH II-3 Operating Limits Salt Hoist II-43

TABLE UH II-4 Control Setpoints Salt Hoist II-44

Working Copy

Chapter II

Subsystem UH04, Salt Handling Hoist
and
Subsystem UH05, Salt Handling Shaft

1.0 PRIMARY FUNCTIONS [**All Shafts and Hoists**)]

1.1 UH04 Salt Handling Hoist

1.1.1 This subsystem provides a hoist system that removes mined salt from underground.

1.1.2 This subsystem provides the principal method for transporting personnel between the surface and the underground horizon.

1.1.3 This subsystem provides a special headframe and skip discharge system that can transfer salt from the skip to a surface haul truck.

1.1.4 This subsystem provides the means for periodic inspection of the shaft.

1.2 UH05 Salt Handling Shaft

1.2.1 This subsystem provides a 10 foot minimum diameter mine shaft through which material and personnel, essential to the underground operations, can move between the surface and the underground horizon. The unlined section is approximately 11'8" in diameter to compensate for possible salt creep.

1.2.2 This subsystem provides a path for conveying mined salt and waste construction materials from the underground horizon.

1.2.3 This subsystem provides a secondary source of downflow air to ventilate the underground facilities.

1.2.4 This subsystem provides a route for power, control, monitoring, and communication cables that service the underground facilities.

1.2.5 This subsystem provides a location to mount instrumentation for measuring hydrostatic pressures behind the lining, salt pressure behind the key and radial convergence of the shaft.

1.2.6 This subsystem provides a salt loading pocket at the underground shaft station for the loading of mined salt.

2.0 DESIGN REQUIREMENTS

2.1 General Requirements [**All Shafts and Hoists**]

2.2 Subsystem General **Requirements [All Shafts & Hoists, Refer to Chapter G**]

2.2.1 UH04 Salt Handling Hoist Requirements

2.2.1.1 The construction and salt handling (SH) hoist shall have a permanently installed headframe which contains a salt dump chute, skip dumping scrolls, and the hoist rope head sheave.

2.2.1.2 The SH hoist shall be a drum hoist. It shall be powered by a DC motor rated at a minimum of 2,300 HP. The rope diameter shall be 1 ½ inches and be of sufficient length to hoist from a depth of 2,800 feet. The hoist shall move a single three-level conveyance through the Salt Handling Shaft (SHS).

2.2.1.3 The SH hoist shall have a 2,200 HP synchronous MG set to supply 2,000 KW to the motor if the SCR's are out of service.

2.2.1.4 The SH hoist shall be capable of being operated in either a manual mode from the hoist control room, or in semi-automatic mode from the hoist control room, or from collar, station, or loading pocket local control panels. In the semi-automatic mode, the hoist speed reference shall be controlled by digital distance programmer (DDP). The DDP shall receive its signal from a pulse transmitter connected to the hoist shaft.

2.2.1.5 The SH hoist speed shall be controlled by process control which considers the speed and distance envelope for any selected trip. The control circuity shall facilitate control of two different operating speeds of the conveyance for transportation of materials or personnel. The critical design parameters shall be as follows:

- Rest Time Per Trip - 10 seconds
- Production Mode (salt Handling) - 1800 FPM
- Service Mode (personnel handling) - 800 FPM
- Shaft Inspection - 125 FPM
- Jog Mode - 25 FPM
- Acceleration Rate - 2 ft/sec/sec
- Deceleration Rate - 2 ft/sec/sec
- Creep Speed - 2 ft/sec

2.2.1.6 The SH hoist shall have a visual gage to indicate to the hoist operator the elevation of the skip/cage.

Working Copy

2.2.1.6.1 Magnetic proximity switches shall be provided in each slowdown zone to monitor conveyance position.

2.2.1.6.2 A tachometer signal shall be used to provide speed feedback for indication, motor overspeed and deceleration checking purposes.

2.2.1.7 A concrete collar with support beams and a grated deck shall be provided at the top of the shaft to allow personnel safe access to the skip/cage without restricting airflow below operating limits. The gate opening for the skip/cage shall be protected by a manually operated gate.

2.2.1.8 Plant air shall be used to release the drum brakes. An auxiliary air compressor shall be provided to supply air to the drum brakes in the event that plant air is lost.

2.2.1.9 All required electrical switchgear, instrumentation, controllers and control panels shall be installed to allow the SH hoist to be operated from the hoist control room (master control station [MCS]) in manual or semi-automatic mode, or from one of three local control stations in semi-automatic mode only.

2.2.1.10 Control from a local control station shall be possible except when the MCS has selected the manual mode of operation.

2.2.1.11 The SH hoist shall have a trip recorder which shall be operable at all times while the hoist is operating.

2.2.1.12 The SH hoist skip/cage shall be designed for a payload of 8-ton. The skip shall be bail less, bottom discharge design with a personal cage and safety dogs. Skipcage shall be a Jetto type and dimensions shall be approximately 4 ft by 4 ft by 35 ft overall length. The weight of the empty skipcage shall not exceed 8 tons.

2.2.1.13 The SH hoist shall have a salt hoisting capacity of 125-ton per hour.

2.2.1.14 The SH hoist skip/cage shall be capable of transporting up to 18 persons per trip. A removable inspection bonnet shall be provided to be used during shaft inspection for overhead protection from falling objects.

2.2.1.15 The SH hoist system shall have a slack rope switch that senses reduction of rope tension below safe limits and stops the hoist.

2.2.1.16 The hoist rope shall be a bright flattened strand-lang-lay rope.

2.2.1.17 Wooden shaft guides shall be provided to guide the skip through the shaft. These wooded guides also serve emergency stopping supports in case of skip support failure.

Working Copy

2.2.1.18 The primary source of DC power to the hoist motor shall be a Silicon Controlled Rectifier (SCR) system. A standby DC motor-generator set shall be provided to supply DC power in the event the SCR system is out of service. The power supply to the SCR system shall be 480 Volts ±10%, 3-phase at 60 Hertz ± 3%. The power supply to the MG set shall be 2,400 volts ± 10%, 3-phase at 60 Hertz ± 3%.

2.2.1.19 A hoist house shall be provided to house the hoist, the hoist control room , an air conditioned switchgear room, and all the instrumentation necessary to operate the conveyance in a safe and controlled manner. The Electrical controls and the hoist system shall be designed to support at least three types of conveyance stopping; A normal stop, a controlled stop that involves deceleration and then brakes set, an emergency stop with the application of brakes.

2.2.1.20 Tracks necessary for the proper opening and closing of the bottom discharge gate of the skip shall be mounted in the headframe.

2.2.1.21 The head sheave groove geometry will comply with ANSI M11.1. The groove diameter shall be 10 percent greater than the actual rope diameter. The sheave assemble will be capable of withstanding the breaking strength of the hoist rope without damage. The head sheave shall have replaceable liners.

2.2.1.22 Electrical equipment may be housed in NEMA 1 enclosures indoors where it is clean and dry. Other locations shall use NEMA rated enclosures suitable to their location conditions. Shaft electrical equipment shall be housed in NEMA 4X enclosures.

2.2.1.23 The Converter Power Transformers shall be ventilated dry-type, with taps for +/- 2.5% change in primary voltage.

2.2.1.24 The power converters shall be two 3 phase, 12 pulse forward and reverse SCR assemblies connected to produce a 12 pulse output. The converter shall meet all the specified duty cycles, acting both as converters and as inverters. Protective features shall be as dictated by IEEE Application class I, and include instantaneous overcurrent, SCR cell failure, conduction through fault, control power undervoltage, and loss of cooling air. Power sections of the SCR converter shall be force ventilated with integral ventilating fans.

2.2.1.25 The NEMA-MG-1 defined overload capability (frequently and occasionally applied) will match the hoist duty cycle requirements without exceeding the motor RMS rating and temperature rise, based on 50 degree C ambient temperature at an elevation of 3,411 feet.

Working Copy

2.2.1.26 During an emergency stop when men are carried the hoist brakes shall bring the skip to a stop not faster than 16 ft/sec/sec, and during normal operation no faster than 6 ft/sec/sec.

2.2.1.27 The hoisting rope safety factor shall be based on ANSI M11.1 which requires a minimum static factor of 4.7 when hoisting material from a 2,162 foot depth when the length of suspended rope is approximately 2,300 feet. In addition, this factor shall be increased to allow for dynamic forces in compliance with 30 CFR Part 57 and the New Mexico Mine Safety Code.

2.2.1.28 When hoisting personnel, the hoisting rope safety factor shall be equal to or greater than that required by the New Mexico Mine Safety Code and 30 CFR Part 57. This requires a minimum rope safety factor of 5.0 for a new rope when hoisting from a depth of 2000 to 3000 feet.

2.2.1.29 The skip shall be provided with safety dogs. If the hoist rope breaks the dogs shall be capable of bringing the skip to a stop in any part of the shaft or headframe.

2.2.1.30 A hoist driven Lilly controller shall be provided to initiate emergency stop on over speed or overtravel conditions.

2.2.1.31 Mechanical track limit switches shall be provided beyond the normal traveling zones which shall actuate emergency stop functions on the hoist drive.

2.2.2 UH05 Salt Handling Shaft Requirements

2.2.2.1 The SH shaft shall extend from the surface to the underground horizon and extend into the salt loading pocket and sump.

2.2.2.2 The SH shaft shall have a concrete collar with a salt surge pad and salt retaining wall to accommodate the removal of salt from the mine. The concrete collar shall support the headframe.

2.2.2.3 The SH shaft shall be lined with fabricated steel to provide a minimum diameter of 10 feet. The lining shall extend from the collar to the keyway.

2.2.2.4 The shaft collar shall support a grated cover and grated doors that allows air to flow through but prevents large objects from falling into the shaft.

2.2.2.5 The shaft shall serve as a secondary path for down flow air for mine ventilation.

2.2.2.6 The shaft station shall include a 54 foot deep salt loading pocket to accept mined salt and transfer it to the skip in measured amounts. The pocket shall contain a 80-ton surge bin located directly above an 8 ton measuring hopper. The surge bin shall maintain a choke feed with the lower measuring hopper and its quadrant type gates shall cut through the material pile when closing.

Working Copy

The measuring hopper shall discharge its load into the skip when its discharge gate opens, which occurs in automatic and semi-automatic operation when the skip docks. Below the pocket is a 55 foot sump.

2.2.2.7 Construction and non construction materials shall not support combustion.

2.2.2.8 There shall be a hoist operation signal (pull bob-bell cord) located in the shaft between the surface and the storage horizon. The signal system shall operate bells at the Shaft collar, Hoist house and the Storage horizon.

2.3 Operational Requirements [**All Shafts & Hoists, Refer to Chapter G**]

2.3.1 UH04 Salt Hoist

2.3.1.1 Hand-held radios are not to be used inside the Hoist Electric Room as they can interfere with the proper operation of the hoist electronics.

2.3.1.2 Switch-over to MG set control of the hoist from the SCR control of the hoist shall be capable of being accomplished by the hoistman from the hoist control panel and the Hoist Electric Room. For safety purposes a 2,300 volt breaker required for MG operations is locked open during SCR operation. This breaker is located outside the hoisthouse and is normally closed by supervision.

2.3.1.3 The electric room temperature shall controlled to assure proper SCR operations

2.4 Structural Requirements [**All Shafts & Hoists, Refer to Chapter G**]

2.4.1 UH04 Salt Hoist Structural Requirements

2.4.1.1 The headframe shall be a steel-framed braced open tower with a pair of sloping raker legs. The raker legs shall also be steel-framed with bracing members.

2.4.1.2 The headframe and backlegs shall be supported at grade by spread footings on caliche approximately six feet below existing grade.

2.4.1.3 The hoist house and drum hoist equipment foundations shall be spread footings with drum hoist foundation bearing on caliche.

2.4.1.4 The hoist house shall be steel-framed construction with insulated metal roofing and siding.

Working Copy

2.4.1.5 The headframe, hoist house and hoist equipment foundations shall be designed for the following loads in addition to the general structural requirements:

2.4.1.5.1 Live load-Salt skip 8.0 Tons Payload-Salt skip 8.0 Tons Empty

2.4.1.5.2 The roller supports and headframe shall be designed for loads as imposed by the unloading system.

2.5 General Arrangements and Essential Features **[All Shafts & Hoists, Refer to Chapter G**]

2.6 Maintenance Requirements [**All Shaft & Hoists**]

2.7 In-Service Inspections [**All Shafts & Hoists, Refer to Chapter G**]

2.8 Instrumentation and Control Requirements [**All Shafts & Hoists, Refer to Chapter G**]

2.8.1 UH04 Salt Handling Hoist

2.8.1.1 The SH hoist shall have a trip recorder which operates at all times the hoist is operating. There shall be two recording speeds: 12 inches/hr and 12 inches/min. Normal speed is 12 inches/hour. This device shall record the motor armature current.

2.8.1.2 The hoist house shall have a local HVAC system to maintain room temperature between 40°F and 90°F.

2.8.1.3 Control of the SH hoist shall be either manual or semi-automatic from a master control station (MCS) in the hoist house. There shall be local control panels at the collar, shaft station, and at the salt loading pocket for semi-automatic control.

2.8.1.4 The MCS shall have a depth indicator dial with a mechanically driven pointer, and a fixed pointer that indicates a scale on the hoist drum for more precise positioning.

2.8.1.5 The MCS shall have a manual speed controller, manual brake controller, FM transceiver voice communications to the shaft conveyance, two-way phone voice communications with the collar and mine, hoist signal annunciators, and an emergency brake control.

2.8.1.6 The MCS shall have meters or digital readouts that indicate hoist depth and speed, motor volts and amps, and a fault monitor panel.

Working Copy

2.8.1.7 The MCS shall have a Master Control Console. The master control console shall be a sit-down type housed in an independent air conditioned enclosure to reduce ambient noise levels and restrict access, and contain related control components. The major control features and functions shall consist of the following:

A. Manual operation of hoist speed from a stepless master joy stick that controls direction, speed and automatically controls the activation and deactivation of the brake.

B. A manual brake control joy stick.

C. A mode switch for selecting Manual, Semi-Automatic, and Test modes.

D. A speed selector switch for Normal, Reduced, and Shaft Inspection speed.

E. A control location switch to Activate/De-activate the local control stations.

F. An emergency stop pushbutton switch.

G. A controlled stop pushbutton switch.

H. A speed profile control switch with a Salt, Personnel Upper Deck, and Personnel Lower Deck positions.

I. A brake maintenance switch that permits releasing one brake at a time for maintenance.

J. An air compressor control switch.

K. A shaft gate bypass switch.

L. A switch for selecting 12 pulse, or 6 pulse SCR power.

M. A key controlled switch to permit selecting either Static or MG mode of power.

N. A key controlled Armature Loop Cutoff Switch, (On/Off).

O. A key controlled slinging switch to disable some overtravel protection when moving equipment under the skipcage.

P. A key controlled overtravel backout switch to permit testing the first two overtravel limit switches.

Working Copy

Q. A key controlled dynamic brake test switch to permit running the hoist motor without disengaging the brake.

R. A lighted display (MEN ARE WORKING IN THE SHAFT).

S. Alarms and Indications to permit the operator to access normal and abnormal conditions of the hoist equipment.

2.8.1.8 The SH hoist shall have a Lilly controller and related limit switches that prevent high and low overtravel, and overspeed.

2.8.1.9 Hoist Communication

The inspection platform on the skip shall have a portable battery powered frequency modulated (FM) transmitter/receiver providing two-way communications between either the inspection platform or personnel cage and the hoist man in the hoistroom.

2.8.1.10 Hoist Monitoring

Hoist operation will be continuously monitored by the central monitoring system (CMS), with the local processor unit (LPU) located in the hoist house electrical equipment room. See Design Base D-71-H-03, Process Monitoring System.

The following conditions will be monitored:

- Mode of operation
- Emergency stop
- Men working in the shaft

2.8.2 UH05 Salt Handling Shaft

2.8.2.1 The salt handling shaft proper has no instrumentation or control requirements. There are geomechanical instruments located in the shaft that are used as information gathering devices. These are not directly shaft control instruments and are referenced in the interface Section 2.9.

2.8.2.2 The salt loading pocket at the base of the SH shaft shall have electrical controls to operate the surge bin gate, bottom closing gate, and air blasters.

2.8.2.3 The loading pocket shall be designed to fill the salt handling skip on a volume basis, with a maximum load weight of 8-tons.

2.9 Interfacing System Requirements [**All Shafts & Hoists, Refer to Chapter G**]

2.10 Quality Assurance Requirements [**All Shafts & Hoists, Refer to Chapter G**]

2.11 Codes and Standards Requirements [**All Shafts & Hoists, Refer to Chapter G**]

2.12 Reliability Assurance Requirements [**All Shafts & Hoists, Refer to Chapter G**]

3.0 DESIGN DESCRIPTION

3.1 Summary [**All Hoists and Shafts**]

3.2 Detail System Description **[All Shafts & Hoists, Refer to Chapter G**]

3.2.1 UH04 The Salt Handling Hoist System Description

3.2.1.1 The Salt Hoist system exists for the main purpose of moving salt, personnel and other material between the surface and the underground. The system also exists to support maintenance and experiments in the Salt shaft. The equipment that is part of this system is the Salt Hoist equipment installed in the Hoist House, the headframe, and the conveyance.

3.2.1.2 The Salt Hoist itself is a double drum (only one drum used), electric driven hoist. (See Figure UH II-1) The Salt Hoist can be powered from a SCR (Silicon Controlled Rectifier) power supply or an MG (Motor Generator) set. (Figure UH II-1 is not a complete schematic. Only sufficient piping is shown to complement the following explanation.)

3.2.1.2.1 The Hoist Drums are driven by a direct drive DC motor on a shaft system supported by four bearings. The shaft is maintained on center by a double acting thrust bearing on the active drum end of the hoist shaft. Each of the drums are connected to the shaft with a clutch system that is mechanically activated to be permanently engaged. These clutches exist because this hoist was designed to be used in an application where both drums were used and could be driven independently. Only one of the drums at WIPP is active with rope wound on it.

Since the original design allowed for one drum to be held by the brake while the other drum operated, there is clearance between the drive shaft and the drums. This clearance is maintained by bushings between the shaft and the drum housing. This clearance is lubricated by grease. Rotational twist of the hoist shaft from one end to the other and clearances in the clutches require that the original clearance be maintained so that excessive wear does not occur on the wearing surfaces between the drum and the shaft.

A dynamic braking system exists that is activated momentarily if the control loop is opened while the hoist is operating. This system connects a bank of resistors across the drive motor armature to assist in control of the hoist speed prior to the brakes being set. To lower the conveyance to the storage level in case of complete loss of power, a dynamic braking system is employed that manually connects a large jumper across the armature of the drive motor. This system utilizes the resistance of the armature and the external wiring to dissipate the energy developed during the conveyance lowering.

3.2.1.2.2 A field is produced in the motor by applying a voltage always with the same polarity. Speed is controlled by varying the DC voltage to the armature of the DC hoist drive motor. Direction is controlled by changing the polarity of the voltage supplied to the armature.

3.2.1.2.3 A set of parallel post brakes exists on each of the hoist drums. These brakes are released by two air cylinders that are connected to the brakes by a mechanical linkage. (See Figure UH II-2)

The brake weight cylinders are single acting cylinders that are either fully extended to raise the brake weights or fully retracted to lower the brake weights. When the brake weights are raised, the brakes may be released. When the brake weights are lowered, the brakes will be set by its weight support levers acting on saddle S1.

The brake operation cylinders position the brakes in a "release", "prime", and "set" position. Each brake operation cylinder has two pistons connected on one rod, mounted in tandem cylinders, forming four pressure chambers. (See Figure UH II-2) Pressure can be applied to provide a Level 1 (Normal) braking torque or a Level 2 (Boost) which is a torque approximately twice as large as Normal torque. Level 2 braking torque is obtained by venting two chambers and pressurizing the remaining two chambers.

When the hoist is operated, the brake weight cylinders move to the release position. The brake operational cylinder pistons move to the "prime" position which releases the brakes but maintains a small clearance between the brake shoes and the brake drum. When high speeds of the drum are initiated by the control system the operational piston moves to the full "release" position providing greater clearance between the brake shoes and the brake drum. The operational cylinder pistons will reposition the brakes to the "prime", "release" or "set" position in response to control signals depending upon the speed and position of the conveyance.

When the hoist is slowed down at its destination, the operational cylinder piston may be moved to the "prime" position. When the hoist is stopped the operational brake is moved to the "set" position. The brake weight cylinders are not returned to the "Set" position unless the loop contactor opens.

Four limit switches are associated with the operation of the operational piston. These limit switches indicate, "Brake Release", "Brake Set", Brake Wear", and "Brake Excessive Travel". The Limit Switches are activated by the operational piston travel.

A pulse generator (Roto Pulser) is driven by a belt drive off of the Lilly drive. The function of this device is to feed a signal to the "DynaPar" emergency braking system. The DynaPar system controls the hoist deceleration rate during an E-Stop, or if a loss of power occurs. The controlled deceleration rate is used to prevent injury to personnel who may be riding the conveyance.

3.2.1.2.4 A digital speed feedback tachometer is driven from the east drum brake ring by a friction pickup wheel. The tachometer outputs two digital pulse trains whose frequency is proportional to the hoist speed and whose relative phase relationship corresponds to the direction of rotation. A pulse tachometer is driven by a belt pulley system from the hoist main shaft. Both of these devices are used in the control system for speed control, direction indication, and position information.

3.2.1.2.5 Compressed air is required and supplied by either the central plant compressed air system or by a compressor located inside the hoist house. The compressor and the central air system is described in SDD CA00. The compressed air is fed to two engines. (See Figure UH II-1)

The two brake engines are identical. Pressurized air from the brake engine tank is supplied to the brake weight cylinder to release the brake for operation. (The brake weight cylinder piston does not release the brake, but permits release.)

Air from the brake engine tank is supplied via a filter and a lubricator to the operating cylinder. Air from this tank T1 (T2) is also delivered to three solenoid operated valves via a pilot operated regulator, a filter, an oiler and a solenoid valve.

A pressure gage and pressure switch are also in this line to monitor the air pressure. Depending on which solenoids are operated on piston P1, the Operational Piston will move to set, prime or release the brakes. A solenoid valve S1 (S2) exists to vent the brake weight cylinder tank to atmosphere and lower the brake weight.

3.2.1.2.6 A bearing lubrication system exists to supply oil to the four main shaft bearings and one thrust bearing. Two motors exist to run two pumps whose outputs are connected in parallel. Only one pump is run at a time. The other pump is setup to start up if the first pump fails. The outputs of the pumps are connected to the lubricating system via check valves.

Working Copy

Oil is obtained from the oil reservoir, raised to pressure by the operating pump, and delivered to the bearings via lines that contain valves to set the flow.

Oil is returned to the reservoir via drain lines connected to each bearing.

Each bearing is equipped with a visual flow gage to permit observation of oil flow, an electrical flow indication device, and an electrical temperature indicator. The hoist can operate in the manual mode without this oil flow but the control system will prevent operation in the semi-automatic mode unless lube oil flow is present.

Each bearing is also equipped with three oil rings that pick up oil from the oil reservoir in the bearing housing and deliver oil to the top of the shaft bearing area.

3.2.1.2.7 A Lilly controller is driven by gearing from the working drum. Through appropriate gearing an indicator is provided so that a large arrow makes less than one revolution for full travel of the hoist. On the periphery of this indicator the locations of the various stopping points for the conveyance are marked for the operators information.

Wheels with cams on the Lilly activate arms at various positions of the conveyance. These arms operate switches to assure that the conveyance is at the appropriate speed when it reaches control positions in the shaft.

Two weight type governors mounted on the Lilly monitor the speed of the conveyance. The governors working through linkage augment the cams above to assure that the speed of the conveyance is reduced when approaching a station and to monitor full speed operation for overspeed conditions.

3.2.1.2.8 The motor generator set (See Figure UH II-3) is a stand alone alternate power source. If the SCR system is not fully functional, the MG set can be used to power the hoist. If the MG set should develop problems, power for the hoist could be obtained by shifting to six pulse SCR operation. Six pulse operation is an emergency operation mode. A static sump with pickup bearing lubricating system is provided for the MG set.

Two pumps are provided that run one at a time, one serves as back up to the other. These pumps are called jacking pumps and are only run in preparation to running the MG set, and are then shut down. Prior to starting the MG set this system is used to provide high pressure oil to the shaft/bearing interface to assure that the there are no unlubricated areas in the bearing.

The inlets to the pumps are filtered with particle filters.

Working Copy

Valves V1, V2, and V3 are provided to apply oil to each bearing set of the M-G set, one at a time, after pressure has been built up by the pump system.

3.2.1.2.9 There are two SCR power supplies that are normally operated in parallel to power the hoist. One SCR power supply can power the hoist at reduced torque and speed conditions.

3.2.1.2.10 The MCS in the hoist control room has selector switches for the assignment of master or local control of the conveyance, and also the source of DC power from the MG set of from the static power converters.

The local control stations are operational only when control is released from the MCS. The station controls are interlocked so that command control is possible from only one control station at any time, and further, only from the shaft or collar station at which the conveyance is located at the time. The local control stations are capable of operating the hoist in the JOG and the SEMI-AUTOMATIC modes only. Each hoisting or lowering cycle is initiated by a pushbutton. Manual control is possible only from the MCS.

There are six preprogrammed trips that can be made by the skip cage in the semi-automatic mode. "Dump to Loading Pocket", "Personnel Upper Deck, Collar to Station", "Personnel Lower Deck, Collar to Station", "Loading Pocket to Dump", "Personnel Upper Deck, Station to Collar", and "Personnel Lower Deck, Station to Collar".

3.2.1.2.11 The conveyance operates in different speed-distance profiles, both in the manual or semi-automatic mode. The available speed selections are Normal (Salt), Reduced Speed (Personnel), and Shaft Inspection. Normal speed is the fastest, followed by Reduced Speed. Shaft Inspection speed is the slowest.

The speed that the conveyance travels and where it slows down and stops is further modified by the three different profiles available; "Salt Transportation", "Personnel Transportation, Upper Deck", and "Personnel Transportation, Lower Deck". The Salt transportation speed is faster than the personnel transportation speed.

Trips may be made in either the Manual or Semi-Auto mode and the control circuitry will stop the conveyance at the proper location for the Speed Profile Selected.

The conveyance is equipped with a mechanism that will cause safety dogs to engage the guide timbers if tension on the hoist rope is lost. Roller guides, three on each side, top and bottom for a total of twelve are attached to the conveyance and can roll on the timber guides.

The headframe is equipped with scrolls and the conveyance with rollers that engage these scrolls such that when the conveyance is raised to the dump

position in the headframe, the conveyance skip tilts and dumps its load into a chute, to a waiting vehicle. (See Figures UH II-4 and UH II-5)

The lower section of the conveyance is free to rotate on support point P1. Lever L1 is attached to the side frame on one end, and the bottom closure door of the salt container on the other end.

As the conveyance is raised wheels engage the scroll track and cause the conveyance lower section to swing away from the vertical position. Since one end of lever L1 is fixed to the side frame, the swing action of the lower section of the conveyance causes the bottom closure to open. Sides on the closure guide the salt into the waiting vehicle.

The bottom mandeck doors are removed so that salt can be dumped into the skip at the salt loading station. The floor of the bottom man deck section is hinged so that it may be positioned out of the way for salt loading and material handling, and lowered to the horizontal position for transporting personnel.

3.2.1.2.12 Other hoist controls exist to test and operate the hoist system, some of which are described below.

Overtravel backout controls exist to permit testing the overtravel limit switches and then allow the conveyance to be moved back into the normal operating range.

A brake maintenance switch exists to permit separate control of each brake. Each brake can be released separately.

If the digital distance programmer fails, it can be bypassed to operate in the manual mode. Speed is limited to lower than normal when operating in this condition.

Emergency stop buttons are provided at the MCS and all the LCSs to effect an emergency stop of the hoist. These buttons are operable in all modes of hoist operation. These buttons will open the control power loop and set the hoist brakes. These buttons provide the most rapid means of bringing the hoist to a stop.

The MCS is provided with a controlled stop button that uses the hoist drive to decelerate the conveyance normally before setting the brakes. This is a slower and softer stopping action than the emergency stop.

The MCS contains an Emergency Brake Air Dump valve adjacent to the MCS control console. This is a quick open ball valve which functions to dump the compressed air from the hoist brake system when opened. This action will cause the hoist brakes to set.

The control and power circuitry can be modified by the addition of jumpers, the lifting of leads, and selectively not closing breakers to permit dynamic lowering of the conveyance.

A slack rope switch exists that senses whether the conveyance rope has excessive slack in it. This condition is indicative of the conveyance being restricted in its lowering or the rope being paid out faster than the conveyance is moving into the shaft. If this condition occurs, the hoist will shut down.

3.2.1.2.13 Six signals from the Salt Hoist Operation are transmitted to the CMR for remote monitoring. These are "Salt Operating Mode", "Personnel Mode Single Deck", "Personnel Mode Double Deck", "Salt Hoist Reduced Speed Operation", "Salt Hoist Emergency Stop Status", and "Salt Hoist Men Working In Shaft".

3.2.1.3 The Salt Hoist Signaling System consists of bells, buzzers and lights activated by the operators at the MCS and the operating stations. In addition a signal rope (bell cord) is installed in the shaft so that personnel on the conveyance can signal from the conveyance.

3.2.1.3.1 The Bell system is activated by the MCS and the collar station only. This system is only used when the conveyance is at the collar station.

3.2.1.3.2 A buzzer system is activated by the MCS, all stations, and by a signal rope (bell cord) that extends down the shaft. This system is used when the conveyance is anywhere except the collar station.

3.2.1.3.3 Each of the buzzer and bell system lights a blue light in the MCS when the bell or buzzer sounds.

3.2.1.4 The Conveyance can transport either personnel or material. No materials and supplies other than small hand tools are allowed on the mandeck during scheduled mantrips.

3.2.1.5 The monorail crane on the storage level is an electric 5 ton material hoist used to support loading and unloading of the conveyance. The monorail is fixed to the back. The hoist is controlled with a pendant to move the crane along the rail and up and down.

3.2.2 UH05 The SALT Shaft System Description

3.2.2.1 The Salt Shaft System extends from the surface to the underground facility for the main purpose of providing a path for the movement of personnel, salt and material. The shaft also provides a path for some of the mine ventilation input air. The equipment that is part of this system is the Shaft itself, the conveyance guides and supports, the collar doors, the personnel safety gates at the collar and the storage level, the signal pull bob system, the

Working Copy

control cables in the shaft, and the salt loading equipment. (See Figure UH II-4)

3.2.2.2 The shaft extends from the surface to below the storage level. The additional shaft excavation below the storage level is needed to accommodate the salt loading equipment and the salt loading operation.

A grate like structure (grizzly) is provided above a hopper that limits the size of the salt that can be added to the hopper to approximately 14 inches. (See Figure UH II-6)

The Hopper is equipped with a swing gate that permits controlled flow of the salt into a measuring bin. The measuring bin is sized to accept a salt load equal to the design load capacity of the conveyance for dry salt. (See Figure UH II-7 and UH II-8)

A discharge control closure is provided on the measuring bin to allow the salt to be discharged from the measuring bin to the conveyance. This discharge control closure serves also as a chute to direct the salt to the conveyance. The discharge closures for both the bin and the hopper are air operated. (See Figure UH II-7)

A typical air cylinder operating system is shown of Figure UH II-6. Plant air is supplied to a solenoid valve through a particle filter and an lubricator. The lubricator provides lubrication for the piston by injecting a small amount of lubricant into the air stream on each operation. When the solenoid is energized plant air is connected to end 1 of the piston, and end 2 is vented via the solenoid valve causing the piston to move in the down direction. When the solenoid is de-energized plant air is connected to end 2 of the piston, and end 1 is vented via the solenoid valve causing the piston to move in the up direction.

Air operated wands, vibrators and air blasters are provided to assist in the flow of salt from the bins to the conveyance. The air blasters are charged by opening a solenoid valve connecting plant air to the blaster.

When the blaster is charged and the charging solenoid de-energized the pressurized air in the blaster discharges a blast of high pressure air through a large pipe to break up the salt jam. This system has not functioned to relieve all salt jams. The pneumatic vibrators are operated by being installed in slots on the side of the hopper and connected to plant air via a quick air disconnects.

A control panel and remote sensing devices are provided to permit an operator to monitor and control the salt loading system. Limit switches sense the storage bin and measuring bin closure doors position and control circuitry prevents both doors from being open simultaneously.

3.2.2.3 Shaft buntens are installed to support the guides for the conveyance.

3.2.2.4 Collar doors exist to cover the shaft opening so that personnel can safely board the conveyance. These collar doors open vertically to provide access to the shaft for maintenance, or transporting material that is larger than the conveyance opening. The collar doors are operated by air cylinders. Limit switches are used to monitor the position of the collar doors.

3.2.2.5 Fencing and gates exist at the collar and station levels of the shaft to prevent inadvertent access to the shaft. Control circuitry prevents movement of the conveyance with these gates open. This interlock can be defeated by deliberate action of the operator at the Master Control station.

3.2.2.6 A signal rope (bell cord) is installed the full length of the shaft to permit signaling using the bell system from anywhere in the shaft.

3.2.2.7 Control cables to support the operation of the hoist and signal system are supported by "Kellam" grips as required throughout the shaft.

3.3 System Performance Characteristics **[All Shafts & Hoists, Refer to Chapter G**]

3.3.1 UH04 Salt Handling Shaft Hoist

3.3.1.1 The SH hoist moves a skip/cage through the SH shaft to transfer mine construction and operations personnel between the surface and the underground. It has the capacity to move 18 persons per trip when moving people.

3.3.1.2 The SH hoist subsystem can transfer mined salt from the underground to the surface at a design capacity rate of 125 tons per hour. Average operation is 100 skip loads per shift.

3.3.1.3 The SH hoist has a maximum rope speed of 1,800 fpm in the salt handling mode, and moves at 800 fpm in the personnel handling mode. Normal acceleration is at 2 ft/sec^2.

3.3.1.4 The SH hoist can be operated in the manual mode by the hoist operator from the master control station (MCS); or in the semi-automatic mode from either the MCS, one of three local control panels located at the shaft collar, or the station and loading pocket.

3.3.1.5 Transfer of operating control from the MCS to the local control panels is selected by the hoist operator; however, each of the three local panels is only operational when the skip/cage is positioned near that station.

3.3.1.6 In the semi-automatic mode of operation, the hoist is programmed to make specific trips from specific starting locations to specific terminal locations.

Working Copy

The DPP is used to control starting acceleration, speed, slowdown, and stopping points for the selected trip, all on the basis of pushing a single button at the starting location.

3.3.1.7 The following trips can be made by the skip/cage in the semi-automatic mode:

- SALT-Dump to Loading Pocket-button at collar
- PERSONNEL UPPER DECK-Collar to Station-button at collar
- PERSONNEL LOWER DECK-Collar to Station-button at collar
- TO DUMP-Loading Pocket to Dump-button at loading pocket
- PERSONNEL UPPER DECK-Station to Collar-button at station
- PERSONNEL LOWER DECK-Station to Collar-button at station

The conveyance may be jogged up or down from the local control panels when the conveyance is near that location. The JOG buttons must be held down while jogging. (Spring Release).

3.3.1.8 If a semi-automatic trip is interrupted, it must be completed in MANUAL mode, and the DDP reset before returning to semi-automatic operation.

3.3.1.9 The skip/cage is capable of being moved through all but the last overtravel limit switch to verify their operability. This is done by the hoist operator with the control in MANUAL mode and proper positioning of the key controlled overtravel backout switches.

3.3.1.10 The hoist control system is capable of verifying the operability of each of the brakes independently.

3.3.1.11 The hoist is capable of being operated in a shaft inspection mode which reduces the skip/cage speed to a maximum of 120 fpm.

3.3.1.12 If the DDP malfunctions, the hoist can be operated manually with the programmer bypassed. The hoist speed is limited to 500 fpm and the DDP speed retard zones are not operational. The hoist operator must control speed approaching stop positions.

3.3.1.13 The hoist is capable of being stopped immediately from any of the four control panels with the hoist in any mode of operation by use of an E-Stop push button.

3.3.1.14 The hoist is capable of being operated in a TEST mode. This mode allows the hoist operator to initiate a trip as if he were a station operator. This feature is usually used when trouble shooting a problem.

3.3.1.15 The hoist operator can bring the hoist to a controlled stop at any time. This is a slower and softer stop than an emergency stop. Deceleration is 2 ft/sec2.

Working Copy

3.3.1.16 The hoist brakes are normally controlled automatically by the process controller. However, the brakes can be operated individually for maintenance and repair functions.

3.3.1.17 The hoist is capable of being stopped in an emergency by the hoist operator dumping the compressed air to the brake operating cylinders.

3.3.1.18 The hoist motor is generally powered from both SCR systems. It is capable of being powered in the manual mode on 6 pulse power using either SCR system. When operated in the 6 pulse mode the salt loading in the skip is reduced to 4 tons.

3.3.1.19 The hoist motor is capable of being powered by the MG set, but only in the manual mode.

3.3.1.20 The hoist system has a standby air compressor that will automatically start up and provide air to the brakes upon loss of plant air. A check valve prevents the standby air from back flow into the plant air supply. The standby air compressor is part of System CA00.

3.3.1.21 The hoist shaft bearings have a positive lubrication system with lubrication supplied by either of two pumps selected by the hoist operator at the MCS.

3.3.1.22 The hoist control panel is equipped with indicator lights that show the status of the hoist and the mode selections to the hoist operator at the MCS.

3.3.1.23 The loading pocket has a salt surge bin that holds about 80 ton of salt. It is loaded from the station level.

3.3.1.24 The surge bin has an air operated bottom discharge gate that is push button controlled by the loading pocket operator. It fills the measuring bin to the choked level and then closes.

3.3.1.25 The measuring bin holds one skip load of salt (8-ton), and can transfer this load to the skip through an air operated swing gate and chute without overfilling.

3.3.1.26 When the loading pocket operator pushes the "TO DUMP" button in semi-automatic control, the skip moves all the way to the dump level, dumps the salt, and returns to the loading pocket ready for another load of salt.

3.3.1.27 The surge bin gate and measuring bin gate are interlocked to assure that only one is operable at any time.

3.3.1.28 The loading pocket operator can limit the amount of salt delivered to the measuring bin by his operation of the surge bin gate. This could be necessary if the salt is wet or if operating on one 6 pulse power converter.

3.3.1.29 The skip can be used to move equipment or materials in the shaft by slinging it underneath the skip/cage. When this is done, the materials deck must be empty as the lower part of the conveyance may tilt as the conveyance is raised through the dump scrolls to allow the underslung load to clear the shaft opening.

3.3.2 UH05 Salt Handling Shaft

3.3.2.1 The air flow performance characteristics of the Construction and Salt Handling Shaft are primarily related to the ventilation system. Flow rates under various flow conditions are described in VU00.

3.3.2.2 There is essentially no airflow from the SH shaft in to the RMA area during Filtration Mode ventilation.

3.4 System Arrangement **[All Shafts & Hoists, Refer to Chapter G]**

3.4.1 UH04 Salt Hoist System Arrangement (See Figures UH II-9 and UH II-4)

3.4.2 Figure UH II-9 depicts the layout of the major equipment in the Salt Hoist house. The hoist equipment room is climate controlled and is separate from the area containing the hoist drum.

3.4.2.1 Figure UH II-4 depicts the vertical layout of the conveyance and the headframe of the Salt Hoist system. (The Salt Loading Equipment is part of WH05.)

3.4.3 UH05 Salt Shaft System Arrangement

The Salt shaft (See Figure UH II-4) varies in diameter, and in the outer wall covering as shown on the referenced figure. The arrangement of the salt loading equipment is also shown on the above figure.

3.5 Component Design Description [**All Shafts & Hoists, Refer to Chapter G**]

3.5.1 UH04 Salt Hoist Component Design Description

3.5.1.1 The hoist operators console is a desk type cabinet with the back section sloped at approximately 15 degrees. (See Figure UH II-10) The horizontal section (Figure UH II-11) contains the majority of the controls and indications to operate the hoist. Most of the switch functions are obvious from their title and position indications. Those that are not obvious are discussed in the following subparagraphs.

3.5.1.1.1 All of the lights on the panel are the color indicated on the figures. The operation of these lights can be tested by depressing the light lens cover,

Working Copy

with the exception of the safety reset and the lube pumps #1 & 2 push button/lights.

3.5.1.1.2 The conveyance position indicator is a digital readout device. The readout is reset to zero at any location of the conveyance by depressing the "Reset Position Display" button on the horizontal section. The arrows that are part of the display are push controls that program the device.

3.5.1.1.3 All of the indicating lights indicate the condition of their title when energized.

3.5.1.1.4 Three of the indicating light lens switches are also used as a control device. The green indicating lights associated with lube pumps number 1 and 2 will stop the pumps when the lens is depressed. The safety reset light, when pushed, will satisfy the final interlock in the control circuitry and set the hoist up for operation if all other safety interlocks have been satisfied.

3.5.1.1.5 The "Shaft/Skip Load Gate Bypass" switch is a two position switch that will bypass the gate open interlock and allow the hoist to run with the gate open.

3.5.1.1.6 The "Armature Loop Control Lockoff" key switch is a control safety switch that is put in the "Lockoff" position when the hoist is left unattended and shutdown. It prevents the hoist from being operated.

3.5.1.1.7 The "Slinging Equipment Overtravel" key switch is a spring return switch that allows bypassing the first top travel limit switch to permit the conveyance to be raised high enough to carry loads slung underneath the conveyance.

3.5.1.1.8 The "Overtravel Backout" switch is a five position spring return to the normal position switch. The first position clockwise and counter clockwise from the normal position is to permit hoist travel beyond the Lilly controller travel stop, to permit testing of the first conveyance activated limit switch stop.

The final positions of the switch, "Backout Raise and Lower" are needed to permit hoist movement back into the normal operating range after overtravel tests.

3.5.1.1.9 The "Test Start" pushbutton and the Test position of the Hoist Mode selector switch are used in conjunction to send the hoist from collar to station, or from station to collar, to test the operation of the hoist.

3.5.1.1.10 Located to the right of the control console is a large mushroom type spring return switch used by the operator to signal the collar operator. Located to the left of the control console is a similar switch used by the operator to signal the station operator.

3.5.1.1.11 The Main Hoist control device is a lever type control that is spring return to the off (neutral/center) position. The hoist speed is proportional to the lever position away from the neutral or center position.

Working Copy

3.5.1.1.12 The brake control lever is a two position switch that enables brake release when it is in the release position. This switch is left in the release position and is seldom used.

3.5.1.1.13 The slack rope/communication loss bypass switch is a keyed two-position spring return from right switch which is used to momentarily bypass the hoist radio communication conveyance slack rope and/or communication loss relay interlocks to the hoist controls.

3.5.1.2 There are three other panels in the hoist operators control room that enable the operator to monitor the hoist system operation; the RTD panel, the hoist bearing temperature panel, and the annunciator panel.

3.5.1.2.1 On the swinging door cover of the auxiliary annunciator panel are mounted 50 indicator annunciators that indicate various status and alarm conditions. See Figure UH II-12.

3.5.1.2.2 On the swinging door cover of the hoist bearing temperature panel three digital indicators are mounted. The top instrument indicates the temperature of the hoist bearings, one at a time, with approximately a 5 second interval. (This scan time is adjustable) The lower two instruments are used to select the low and high alarm points for the bearing temperatures. A set of 4 thumb wheel potentiometers, and a thumb wheel selector switch are provided to select the alarm point and whether it is a high or low alarm. See Figure UH II-13.

3.5.1.2.3 On the swinging door of the RTD temperature panel are 6 digital indicators that are associated with the hoist system and measure the temperature of the M-G set windings. The other indicators are associated with other systems and are just shown here for completeness. See Figure UH II-14.

3.5.1.3 The lube oil pumps for the hoist bearings are gear pumps driven by electric motors, that are mounted on top of the oil reservoir.

3.5.1.3.1 The electric motors are 2 horse power motors that are driven at 1,160 RPM, by a 460 Volt, three phase supply.

3.5.1.3.2 The oil reservoir is a rectangular tank that is approximately 5 feet long, 2 ½ feet deep, and 2 ½ feet high. The oil reservoir has an immersion heater installed through the end wall with a self contained thermostat to maintain the minimum oil temperature. The reservoir has a sight level gage that permits observing the oil level in the tank when it is in the top 6 inches (operating range) of the tank.

3.5.1.4 The jacking pumps for the MG set bearings are vane pumps driven by electric motors, that are mounted on top of the oil reservoir.

Working Copy

3.5.1.4.1 The electric motors are 7.5 horse power motors that are driven at 1,760 RPM, by a 460 volt, three phase supply.

3.5.1.4.2 The oil reservoir is a rectangular tank that is approximately 4 feet long, 2 ½ feet deep, and 14 inches high.

3.5.1.4.3 The outputs of the pumps are connected to a regulating valve the relieves back to the reservoir to maintain the pressure set by the adjustment on the regulator. The output of the regulator feeds the main feed line to the three bearing housings. The regulator pressure is adjustable by a handle mounted on the regulator.

3.5.1.5 The bearings for both the MG set and the Hoist are similar. They are both babbitt lined journals, with oil slinger rings for lubrication.

3.5.1.5.1 The hoist bearings have three leather slinger rings per bearing, while the MG set bearings have two bronze slinger rings per bearing.

3.5.1.5.2 The MG set bearing housings are full babbitt on the top and bottom bearing area. The hoist bearings are full babbitt on the lower area but are webbed on the top portion.

3.5.1.5.3 The hoist bearings are equipped with an oil flow system that provides constant oil flow to the bearings in addition to the slinger ring system.

3.5.1.6 The Speed Digital Tachometer, the Pulse Generator, and the Rotapulser are part of the control system. Signals from these devices indicate speed, position and operation of the devices they monitor.

3.5.1.6.1 The speed digital tachometer is connected to a frequency-to-voltage converter which generates and output DC voltage whose magnitude is proportional to hoist speed and whose polarity corresponds with direction of rotation of the drum.

3.5.1.6.2 The pulse generator is used to indicate position of the Salt Hoist conveyance by counting the two channel output pulses generated by the salt hoist shaft rotation and converting that to position information electronically. The relative position of the pulses of the two channels varies depending on the direction of the generator. This feature permits external circuitry to determine the direction of the hoist as well as the distance and allows the pulse generator to count "up" and "down" .

3.5.1.6.3 The roto pulser is belt driven by the same gear drive that connects the work drum to the Lilly controller. The pulse outputs from this unit only indicate the speed of the hoist, and not direction. Output from this unit is used with the automatic deceleration brake control system (Dynapar) to bring the conveyance to a controlled stop under E-Stop conditions.

Working Copy

3.5.1.7 The Hoist Drive Motor is a 2,300-horsepower DC motor. The field is formed by wound poles and is supplied with a constant DC current obtained from rectifying a 240 volt three phase supply.

The armature consists of multiple coils, wound on a core and connected to interpoles and a commutator similar to many DC machines. The DC voltage magnitude and direction controls the speed and direction of the hoist. Nominal current is 2,000 amperes. The hoist drive motor is approximately 9 feet in diameter, contains 16 main poles, and 16 interpoles. It is equipped with 16 sets of brushes with 7 brushes in each set.

3.5.1.8 The Lilly controller is mechanical device that monitors the speed and position of the Salt Hoist conveyance. Some of the key features are listed below.

3.5.1.8.1 The Lilly is driven by gearing connected to the working drum. The gearing is designed so that the main cam wheel of the Lilly makes less than one revolution for the full travel of the conveyance.

3.5.1.8.2 Retard cams mounted on the cam wheel provide automatic stops at the station locations of the hoist if the speed has not been reduced. Cams on the cam wheel also provide track limits at the end of travel.

3.5.1.8.3 A mechanical governor mounted on the Lilly sense speed of the hoist and provides overspeed protection.

3.5.1.8.4 A mechanical depth indicator that makes less than one revolution for the full travel of the conveyance is driven by the Lilly common drive line and positioned such that the operator can monitor the position of the hoist.

3.5.1.9 The compressed air tank (described in CA00) supplies pressurized air to two secondary receivers, one for each brake engine.

3.5.1.10 The main hoist rope is 1 1/2 inches in diameter.

3.5.1.11 The hoist is controlled at the collar level, the station level and the loading pocket level by local control panels that are very similar. (See Figure UH II-15) The function of all the controls and indications are obvious from reviewing the figure. These local panel are not operable unless the conveyance is at the station, and semi-automatic operation of the hoist has been selected by the operator at the master control station. The stop point of the conveyance is dependent upon the position of the Profile Control Switch on the Salt Hoist Control console. (e.g., If the profile control switch is in the Salt position, depressing the "Down to Storage Level" button at the collar station will send the conveyance to the loading pocket.)

3.5.1.12 The MG set occupies a space approximately 20 feet long, with a diametrical envelope of 8 feet.

Working Copy

3.5.1.12.1 The motor is of synchronous design, 7 feet in diameter, and 11 feet long from bearing to bearing. It is rated at 2,200 volts, 3-phase, 60 Hz, and runs at 514 RPM. It is considered to be a 2,200 Hp motor.

3.5.1.12.2 The DC generator is 8 feet in diameter, and extends approximately 9 feet from bearing to bearing. There are 10 sets of brushes equally spaced around the diameter of the commutator. Each brush set contains 11 brushes. The generator is rated at 2,000 KW, 600 Volts, and 3,333 amperes.

3.5.1.12.3 The pump motors that run the jacking pumps are rated at 7.5 HP, 1,760 RPM, 550 volts, 8.2 amps, 3-phase, 60 Hz. They are fed however from a 480 volt bus.

3.5.1.12.4 The oil reservoir that supplies oil to the MG set jacking system is made of steel. It is approximately 30 inches wide, 5 feet long, and 14 inches deep.

3.5.2 UH05 Salt Shaft Component Design Description

3.5.2.1 The shaft is lined with steel to the bedded salt interface. At the liner bottom a reinforced concrete key exists. Below the key from the salt/rock interface downward the shaft is unlined and unsupported. Some portions of the unlined shaft are covered with bolted mesh to control surface scaling.

The thickness of the steel liner varies from 5/8 inch at the collar to 1.5 inches just above the key. To determine the thickness of the liner at any location requires referring to detail drawings of the shaft.

The concrete key is a concrete cylinder. The concrete key has 4, 2 inch drain lines installed about half way up the key to drain water from behind the key to the face of the key. The bottom of the key is shaped like a gutter and a two inch drain line drains this gutter to the bottom of the shaft.

3.5.2.2 The conveyance guides are made from Douglas fir and are supported every 12 feet by buntons that are attached to the shaft wall. The guides are approximately 9 X 5.5 inches in cross section.

3.5.2.3 The Salt Loading Level Control Panels are the "Air Blaster Control" panel, and the "Loading Bin Control" panel. (See Figure UH II-16)

3.5.2.3.1 The push button controls on the Air Blaster Control panel are spring loaded. As long as a push button is depressed an electric solenoid is energized allowing service air to charge the air blaster. When the push button is release the solenoid closes and vents the internal blaster piston to atmosphere.

Working Copy

3.5.2.3.2 The Loading Bin Control Panel has lights and switches to control and indicate the operation of the loading bins. Most of these are self explanatory by referring to Figure UH II-16. Some additional discussion follows.

All the push button switches are spring return to normal except the "Emergency Stop" button. It must be pulled out to reset it.

The Load Gate Open, Load Gate Closed, Charge Gate Open and Charge Gate Closed indicating lights indicate the position of their respective gates.

The Open Load Gate and Open Charge Gate pushbuttons are used to control the position of the gates. Each pushbutton operates its associated solenoid valve and cylinder to open its gate when the pushbutton is depressed and close the gate when the pushbutton is released. The gates are interlocked for normal operation to prevent both gates from opening at once.

The Load Gate Open solenoid is also interlocked with the Skip In Position and Skip Over-travel functions to prevent opening the Load Gate when the skip is not in loading position.

It may be necessary to momentarily open both gates in order to dislodge a hangup in the loading system. Jto provide this capability, the load and charge gate interlocks may be bypassed by operating the Gate Interlocks Bypass spring-return keyed switch. Because of the potential for uncontrolled release of salt, this switch requires a key for operation and thus provides for administrative control fo the interlock bypass process. The operator must hold the switch in the Bypass position, then press both the Open Charge Gate and Open Load Gate pushbuttons to perform this operation. The Skip In Position and Skip Over-travel interlocks remain functional for this operation to prevent opening the Load Gate when their interlock conditions are not satisfied.

3.5.2.4 The Hopper and Bin equipment is generally self explanatory by referring to Figure UH II-7. A few design requirements and operation information for the components are discussed below.

3.5.2.4.1 Air Blaster operation can be better understood by referring to Figure UH II-17. When the control valve 1 is opened, plant air is fed to the main piston which positions it to close the discharge orifices. Plant air also charges the blaster tank via check valve 2. When the tank is charged to plant air pressure, the control valve 1 is de-energized to vent the top of the main piston. Check valve 2 prevents the blaster tank pressure from venting through the control valve. Tank pressure via the orifices positions the main piston to the discharge position allowing the blaster tank pressure to be released through the discharge piping to the bin in less than 1 second.

Working Copy

3.5.2.4.2 The Salt Loading swing gate (Figure UH II-7) has been designed to provide side guides for the load when in the discharge position.

3.5.2.4.3 The pistons that operate the storage bin discharge swing gate and the Salt loading swing gate have been designed to power the doors in both the open and shut direction. This design aids in shutting the doors if a clump of salt is in the closing path. It also aids in loading a partial load, as may be necessary if much heavier than normal salt is being handled.

3.5.2.4.4 The "Vibrator" is an eccentric driven air motor. When mounted in the slots provided, (Figure UH II-6) and connected to an air supply, the vibration is transferred to the walls of the hopper.

3.5.2.5 The "Pull Bob" mine signal switches are enclosed but not dust tight to protect them from the mine atmosphere. Each switch will support the weight of the operating rope, and requires an additional force to operate it.

3.6 Instrumentation and Control Information [**All Shafts & Hoists, Refer to Chapter G**]

3.6.1 UH04 I & C Information for the Salt Hoist System

A listing of I & C information is shown on Table UH II-1. A brief discussion of each of the items follows if the operation and purpose of the instrument is not obvious. The indications of the Annunciator panel, (Figure UH II-12), the Hoist Bearing Temperature panel, (Figure UH II-13) and the Hoist RTD Temperature panel, (Figure UH II-14) are also discussed if their operation is not obvious.

3.6.1.1 The Salt Hoist Master Control Panel. (Figures UH II-10 and UH II-11)

3.6.1.2 The Men Working In Shaft Light is energized by the Manual Speed selector switch when it is placed in the Shaft Inspection, or Reduced Speed position.

3.6.1.3 The Conveyance Position Indicator functions with the Hoist Pulse Generator and the Reset Position Indicator push button on the horizontal section of the panel. The instrumentation monitors the pulses from the pulse generator and converts the signal to a position indication. Whenever the Reset button is depressed the position indication returns to zero. Normally the position indication is set to zero at the collar position. The position indicator can be reset to zero at any location in the shaft and used to measure the distance between locations in the shaft.

3.6.1.3.1 The Overtravel Backout Light will energize when the Overtravel Backout switch is placed in either the Backout Lower or Raise position.

3.6.1.3.2 The Slinging Equipment Overtravel light will energize when the Slinging Equipment Overtravel key switch is placed in the bypass position.

Working Copy

3.6.1.3.3 The Retard Zone light is energized by the Lilly control circuitry when the skip is in the area near the collar, or the station in which it should be slowing down.

3.6.1.3.4 The Loop Contactor Closed light energizes when the Safety Reset light lens is depressed and all hoist interlocks are satisfied. This light must be energized for the hoist to operate.

3.6.1.3.5 The MG Set Operation light and the SCR Operation light is energized by the "GEN" or the "SCR" relays which are controlled by the key switch below the lights, when either the "Static" or "MG Set" position is selected.

3.6.1.3.6 The Programmer Bypassed light is energized whenever the Digital Distance Programmer power is lost and the Hoist Mode Selector switch is placed in the Manual position, or the hoist mode selector switch is placed in manual at any location other than the collar. A flasher unit drives this indication to alert the operator that an abnormal condition exists.

3.6.1.3.7 The Skip Loading Panel Bypass key switch was originally intended to be used when salt loading and unloading was to be accomplished in a fully automatic mode. This switch bypassed the control equipment in the bin loading panel. The fully automatic mode of operation is not functional.

3.6.1.3.8 The Shaft/Skip Load Gate Bypass switch is used to bypass the interlock that prevents the hoist from operating with a gate open. When in the bypass position a flasher is connected to the Shaft/Skip Load Gate Open indication light to alert the operator of this abnormal control condition.

3.6.1.3.9 The Armature Loop Control Lockoff key switch is used to prevent operation of the control system. When this switch is in the "Lockoff" position the hoist cannot be operated.

3.6.1.3.10 The Safety Reset light is also a switch. When the lens is depressed the control loop is completed and the "Loop Contactor" closes if all hoist operation interlocks have been satisfied. This operation is necessary to operate the hoist.

3.6.1.3.11 The Brake Control lever was originally designed to be a spring return control to permit brake release. The joy stick is now a two position control and is left in the "Release Position". The automatic control circuitry releases and sets the drum brakes.

3.6.1.3.12 The Hoist Control lever controls the hoist operation when the Mode Selector switch is in the "Manual" position. The further the lever is moved from the off position, the faster the hoist will operate within its design speed settings. Automatic deceleration is not in effect in this mode. The control system will

Working Copy

stop the hoist if the operator does not slow down the hoist in the deceleration zones.

3.6.1.3.13 The SCR Normal/Half Power switch is used to set up the control circuitry to operate with only one SCR bank operational. This mode of operation is not accomplished with the simple repositioning of the control switch. Other control changes must be made in the control room depending on which SCR bank is operational. This is an emergency mode of operation. The preferred order of power supplies for the hoist operation is dual SCR operation, MG Set operation, and as a last resort single SCR bank operation.

3.6.1.3.14 The Slinging Equipment Overtravel key switch bypasses the Lilly top travel limit switch to permit raising the conveyance above its normal position to sling equipment under the conveyance.

3.6.1.3.15 The Lube Pump #1 and #2 indicating lights perform the dual function of indicating which pump is running and as switches to stop the lubrication pumps. When the lens is depressed the associated lubricating pump will stop.

3.6.1.3.16 The test start button and the hoist mode selector switch are used in conjunction to test the conveyance in the semi-automatic mode. With the hoist mode selector switch in the "Test" position, the conveyance at the collar position, pressing the test start button will send the conveyance to the station. If the conveyance was at the Station, depressing the test start button would send the conveyance to the Collar.

3.6.1.3.17 The Overtravel Backout switch is used to test the magnetic overtravel switch that is the first overtravel switch beyond the setting of the Lilly overtravel limits. In the "Raise OT Test" position, this switch bypasses the Lilly top overtravel limit switch and permits the conveyance to move to the next limit switch to check its operation. The "Backout Raise" position permits the conveyance to be moved down back into its normal range after the test is complete. Similar operation occurs for the lower limit switch test.

3.6.1.3.18 The Manual Speed Select switch selects "Normal" speed for the movement of material in the conveyance, "Reduce Speed" for the movement of personnel in the conveyance, and "Shaft Insp" for a slow speed for shaft inspection operations.

3.6.1.3.19 The Shaft Profile Control switch sets different automatic stops for the conveyance depending on the current usage of the conveyance. If the "Pers Upper Deck" position is selected the conveyance will stop with the floor of the upper deck aligned with the step off level. Similar controls exist for the other positions of the switch.

3.6.1.3.20 The Brake Maintenance switch is used to test the brake system. By positioning the switch to the "L.B.Prime" position the left drum brake is

Working Copy

positioned to the "Prime" position while the right brake remains set. The holding power of the right brake can now be tested without the effect of the left brake. Clearances of the left brake can be tested under these conditions while still maintaining the drum under brake conditions. Other positions of the switch perform similarly.

3.6.1.3.21 The Dynamic Brake Test Switch prevents the brakes from being released when the hoist is operated. This switch is used to test the brakes by driving the drum against set brakes. This switch used in conjunction with the Brake Maintenance switch permits testing one brake at a time.

3.6.1.3.22 The Controlled Stop and the Emergency Stop push buttons both stop the conveyance. The Controlled Stop action is a less rapid deceleration than the Emergency Stop action.

3.6.1.4 The Salt Hoist Collar Level and Station Level Control Panel. (Figure UH II-15)

3.6.1.4.1 The Down to Storage Level push button will send the conveyance to the storage level if the Hoist Mode Selector switch has been placed in the Semi-Automatic position by the operator at the Master control station.

3.6.1.4.2 The panel at the Station is identical to the panel at the collar except that the push button to start the conveyance is labeled, "Up to Collar Level". This button will send the conveyance to the collar if the system is in the semi-automatic mode.

3.6.1.4.3 The Jog Up and the Jog Down buttons are only functional when the conveyance is at the position of the panel, and the system is in the semi-automatic mode.

3.6.1.4.4 There is a conveyance control panel at the Loading Station that is identical to the control panels at the Collar and the Station except the push button to control the conveyance sends the conveyance to the dump position in the head frame. There is also a selector switch that gives the loading station operator the ability to automatically dump the load when it reaches the surface.

3.6.1.5 Limit Switches

The function of the limit switches shown on Table UH II-1 are to perform various control functions, or to indicate operation conditions to the operator. To perform these functions each limit switch may form logic circuits with other parameter monitors. The purpose of the following discussion is to provide information on the use of the limit switches whose function is not readily apparent. A complete description of how the limit switch interacts with the control system can be found on the system control schematic.

Working Copy

3.6.1.5.1 Limit switches DECLS1, 2, 3, and 4 are used as a check for process control. If the speed of the hoist has not reduced sufficiently before these magnetic switches are opened, the hoist will be brought to an emergency stop.

3.6.1.5.2 The PODLS, proof of dump limit switch is not installed.

3.6.1.6 Salt Hoist Annunciator Panels

The function of the indications on the Salt Hoist Annunciator Panel (Figure UH II-12), the Salt Hoist Bearing Temperature Panel (Figure UH II-13), and the Salt Hoist RTD Temperature Panel (Figure UH II-14) are generally obvious from their titles. In the discussion below, the indications on the Annunciator panel that are not considered apparent are discussed.

The Salt Hoist Annunciator Panel is a repeater of a similar panel in the SCR control room.

3.6.1.6.1 The "Timed Over Current" alarm will energize if excessive drive motor armature current exists for an excessive time period. The value of the excessive current and the allowable time before the alarm is adjustable in the control system. It is activated by the TOC relay.

3.6.1.6.2 The "Emergency Braking Not Available" alarm refers to the Dynapar system that slows the conveyance down at a safe deceleration rate. If the Dynapar system is not available, this alarm is energized.

3.6.1.6.3 The "Brake Fail to Set" alarm will energize if a brake set signal has been initiated by the control system and the limit switches that sense brake piston position do not note both the brakes being set within a built in time delay of approximately 2 seconds.

3.6.1.6.4 The "Failure to Exit Dump" indication is a time delayed alarm that is started when the conveyance reaches the dump position in the headframe. After a set interval of approximately 7 seconds the alarm will occur unless the conveyance is lowered enough to reclose the Salt Stop Hoist limit switch.

3.6.1.6.5 The "Brake Fail to Release" alarm is activated by a time delay relay that is normally energized and requires 2 seconds to de-energize. When the control system signals the hoist to move, and speed reaches 5% of full speed, power is removed from the time delay relay.

If both brake release limit switches are not closed within this two seconds period indicating that the brakes have fully released, the time delay relay will be not be repowered and the "Brake Fail to Release" alarm will occur.

Working Copy

3.6.1.6.6 The "Shaft/Skip Load Gate Open" alarm is activated by opening either the loading pocket Load Gate or a shaft gate while the hoist is in motion under any but jogging conditions.

3.6.1.6.7 The DDP permissive light is energized when operation in the Digital Distance Programming mode is not possible. The input to this indication is the Programmer sequence information, the Programmer Permissive control Switch, and the "Hoist Without Programming" relay.

3.6.1.6.8 The "Hoist Motor Field Over Current" light is energized when the motor field current exceeds 120% of full field current.

3.6.1.6.9 The "Failure to Decelerate" indication is controlled by the "Failure to Decelerate" relay. This relay monitors conveyance position and speed, and whether the conveyance is operating in the salt mode. If the conveyance is traveling too fast for the load it is handling, when it reaches preset positions, the control system will automatically stop the conveyance.

3.6.1.6.10 The "Synchronous Motor Starter" indication is a follower for the MG set synchronous motor starter. If the motor starter opens this light will energize. To prevent this light from being on constantly when the Hoist is being powered from the SCR mode, contacts from the "Static/MG Set" selector switch and auxiliary contacts from the "TSW" controller bolted pressure switch defeat this alarm when in the SCR position.

3.6.1.6.11 The "Interphase Reactor Overtemp" indication results when high temperature occurs in the interphase reactor of either SCR bank A or B.

3.6.1.6.12 The "AC Bridge PWR undervoltage" indication results when the supply voltage to the SCR DC bridge circuitry to either SCR bank A or B is low. Contacts of the "SCR Normal/Half Power" switch by pass this alarm when operating in half power.

3.6.1.6.13 The "Regulator Malfunction" light compares the speed reference to the speed feedback. If the speed difference becomes too great, this alarm will occur, and the hoist will automatically stop.

3.6.1.6.14 The "Field Cur Iso Loss" and the "Arm Cur Iso Loss" lights monitor the functionality of the optical isolation cards. The function of the isolation cards is to isolate the high voltage of the parameter being monitored from the low voltage control circuitry. If this card is sensed to be non-functional the hoist will stop.

3.6.1.6.15 The "Electronics Power Supply Loss" light indicates that at least one of the 5, 15, or 28 Volt power sources has decrease below its allowable low voltage setpoint.

Working Copy

3.6.1.6.16 The "Dynamic Brake Loss" light indicates that one or both of the dynamic braking contactors has opened. This condition results in an emergency stop. (Note that each time the loop is opened, the dynamic brake loss light will illuminate, but the lamp will flash only if loss of dynamic braking caused the stop.)

3.6.1.6.17 The "Conv A Alarm" light indicates that one of the control card monitor lights in the Converter A SCR control equipment panel is indicating a problem, but the Converter may still be operable. The "Conv B Alarm" light performs the same function with Converter B. The "Conv A (or B) Fault" light indicates that Converter A (or B) is inoperative. It is possible to obtain a Converter Alarm indication without receiving a Converter Fault indication. A Converter Fault indication will always be accompanied by a Converter Alarm light.

3.6.1.6.18 The "Brake Test Time" indicator is really a Dynamic Brake Test time alarm. If the dynamic test of the brakes is maintain too long this light will energize.

3.6.1.6.19 The "250V CPE U/V" light indicates when the Control Power Exciter voltage decreases below the setpoint.

3.6.1.6.20 The “Tach Loss / Harmonic Filter LIS Open” light indicates when protective functions of the speed feedback frequency to voltage converter operate, or the Harmonic Filter isolation switch is open. This alarm causes an emergency stop of the hoist.

3.6.2 UH05 I & C Information for the Salt Shaft System

A listing of I & C information is shown on Table UH II-2. The items covered are the Salt Loading Control Panel and the limit switches associated with the salt loading bin. The limit switches in the shaft associated with the operation of the Salt Hoist conveyance are covered in Section 3.6.4. A brief discussion of each of the items follows if the operation and purpose of the instrument is not obvious.

Working Copy

TABLE UH II-1 Salt Hoist Instrumentation Controls & Interlocks

Instrument Numbers	Function	Type	Rnge	Accuracy	Setpoint	Instrument Sensor Location	Readout Location
Hoist Control Panel (Sloping Section)							
GILCTU	Cnvey Trvl Up Ind	Incandescnt	On/Off	NA	NA	Hst Drum Controller	Hoist Cont Pnl
GILCTD	Convey Trvl Down Ind	Incandescnt	On/Off	NA	NA	Hst Drum Controller	Hoist Cont Pnl
WILCCS	Skip Carries Salt Ind	Incandescnt	On/Off	NA	NA	Hoist Cont Pnl	Hoist Cont Pnl
WILCCP	Skip Carries Pers Ind	Incandescnt	On/Off	NA	NA	Hoist Cont Pnl	Hoist Cont Pnl
WILCSL	Ind Cnvey at Strg Lvl	Incandescnt	On/Off	NA	NA	Lim Sw at Storg Lvl	Hoist Cont Pnl
WILCCL	Ind Cnvey at Col Lvl	Incandescnt	On/Off	NA	NA	Lim Sw at Collar Lvl	Hoist Cont Pnl
WILCD	Ind Cnvey at Dump Lvl	Incandescnt	On/Off	NA	NA	Lim Sw at Dump Lvl	Hoist Cont Pnl
WILCLP	Ind Cnvey at Load Lvl	Incandescnt	On/Off	NA	NA	Lim Sw at Load Lvl	Hoist Cont Pnl
WILMW	Ind Men Wkg In Shaft	Panel Light	On/Off	NA	NA	Manual Spd Sel Sw	Hoist Cont Pnl
DSM	Speed Indication	Digital	0 -2500 FPM	± 1 FRM	NA	Hoist Speed Tach	Hoist Cont Pnl
HSM	Speed Indication	Analog Meter	2500-0-2500 FPM	± 2%	NA	Hoist Speed Tach	Hoist Cont Pnl
HVM	Ind Hoist Volt	Analog Meter	600-0-600 VDC	± 2%	NA	Control System	Hoist Cont Pnl
HAM	Ind Hoist Amps	Analog Meter	8KA-0-8KA	± 2%	NA	Control System	Hoist Cont Pnl
DDI	Indicate Skip Pos	Digital	6 Digits	± 0.1 ft	NA	Hoist Pulse Gen	Hoist Cont Pnl
Hoist Control Panel (Horizontal Section)							
WILBO	Ind Backout Status	Incandescnt	On/Off	NA	NA	Ovrtvl BO Swtch	Hoist Cont Pnl
WILBO	Ind Pos Sling Status	Incandescnt	On/Off	NA	NA	Sling Equip OT Sw	Hoist Cont Pnl
YILSR	Ind Slk Rope Sw Trip	Incandescnt	On/Off	NA	Slack Rope	Slack Rope LS	Hoist Cont Pnl
YILOT	Ind Hot Hst Bear Oil	Incandescnt	NA	NA	160 Deg F	Hoist Bear Housings	Hoist Cont Pnl
RILUT	Ind Cold Hst Bear Oil	Incandescnt	NA	NA	60 Deg F	Lube Oil Pump Output	Hoist Cont Pnl
None	Ind Skip in Rtrd Zone	Incandescnt	On/Off	NA	Aprox -200' Hoisting -1950' Lowering	Lilly Controller	Hoist Cont Pnl
GILMGO	Ind MG Set Oper Mode	Incandescnt	On/Off	NA	NA	"Gen" Relay	Hoist Cont Pnl
RILLCC	Ind Loop Cont Clsd	Incandescnt	On/Off	NA	NA	"Maux" Main Cont	Hoist Cont Pnl
GILLCC	Ind Loop Cont Open	Incandescnt	On/Off	NA	NA	"Maux" Main Cont	Hoist Cont Pnl
GILSC	Hi Volt Brkr Closed	Incandescnt	On/Off	NA	NA	"ACBKR" Folwr Relay	Hoist Cont Pnl
RILSO	Hi Volt Brkr Open	Incandescnt	On/Off	NA	NA	"ACBKR" Folwr Relay	Hoist Cont Pnl

Working Copy

TABLE UH II-1 Salt Hoist Instrumentation Controls & Interlocks (continued)

Instrument Numbers	Sensor Function	Readout Type	Range	Accuracy	Setpoint		Location	Location
BILS-A	Ind Semi-Auto Mode		Incandescnt	On/Off	NA	NA	Hoist Mode Sw	Hoist Cont Pnl
WILM	Ind Manual Mode		Incandescnt	On/Off	NA	NA	Hoist Mode Sw	Hoist Cont Pnl
RILPB	Ind Progmr Bypassed		Incandescnt	Flashing/Off	NA	NA	"HWPS" or "POS" Rlys	Hoist Cont Pnl
RILSGO	Shaft/Skip Load Gate Open Ind		Incandescnt	On/Off	NA	NA	Gate Limit Sw	Hoist Cont Pnl
WILMSN	Ind Man Spd Cont Neut		Incandescnt	On/Off	NA	NA	Manual Cont Sw	Hoist Cont Pnl
GILCDC	Inc Collar Doors Clsd		Incandescnt	On/Off	NA	NA	Collar Dr Lim Sw	Hoist Cont Pnl
YILCDO	Inc Collar Doors Open		Incandescnt	On/Off	NA	NA	Collar Dr Lim Sw	Hoist Cont Pnl
YILA	Ind Alarm Condition		Incandescnt	On/Off	NA	NA	MXP, C or E Drop Out	Hoist Cont Pnl
PBALS2	Silence Aud Alarm	Sprng Rtn PB	Two Position		NA	NA	Hoist Cont Pnl	NA
GILSO	Ind SCR Oper Mode		Incandescnt	On/Off	NA	NA	"SCR" Relay	Hoist Cont Pnl
PBLP1	Start #1 Lube Pump		Sprng Rtn PB	Two Position	NA	NA	Hoist Cont Pnl	NA
PBLP2	Start #2 Lube Pump		Sprng Rtn PB	Two Position	NA	NA	Hoist Cont Pnl	NA
Loading	Station Control Panel (All Controls of Collar Panel Plus Below)							
SLP-BSW	Slct Dump or No Dump		Snap Sel Sw	Dump/No Dump		NA	NA	Control Panel None
WIL-C	Ind Control at Panel		Incandescent	On/Off	NA	NA	Control System	Control Panel
RIL-GO	Ind Shaft/Skip Load Gate Open		Incandescent	On/Off	NA	NA	Shaft Gate	Control Panel
WIL-M	Ind Hst Cont in Man		Incandescent	On/Off	NA	NA	Control System	Control Panel
BIL-SA	Ind Hst Cont Semi-A		Incandescent	On/Off	NA	NA	Control System	Control Panel
PB-S	Start Hoist to Dump		Sprng Rtn PB	On/Off	NA	NA	Control Panel	None
PB-JU	Jog Conv Up Spring		Rtn PB	On/Off	NA	NA	Control Panel	None
PB-JD	Jog Conv Down	Sprng Rtn PB		On/Off	NA	NA	Control Panel	None
PB-ES	Emerg Stop	Push Button		On/Off	NA	NA	Control Panel	None
Hoist Limit Switches								
CDLS1	Ind Collar Dr Open		Prox SW	On/Off	NA	NA	At Collar Door	Oper Panel
CDLS2	Ind Collar Dr Clsd	Prox SW		On/Off	NA	NA	At Collar Door	Oper Panel
DECLS1	Decel Chk Stor Levl		Magnetic Sw	On/Off	NA	Aprox Salt -1931 Personnel-2021	Shaft	None

Working Copy

TABLE UH II-1 Salt Hoist Instrumentation Controls & Interlocks (continued)

Instrument Numbers	Function	Type	Range	Accuracy	Setpoint	Instrument Sensor Location	Readout Location
DECLS2	Decel Chk Stor Levl	Magnetic Sw	On/Off	NA	Aprox Pers Approach -2058 Pers Creep -2129	Shaft	None
DECLS3	Decel Chk Top	Magnetic Sw	On/Off	NA	Aprox Salt Approach-H-203 Salt Slowdn -H-281 Salt Slowdn -L-1861	Shaft	None
DECLS4	Decel Chk Top	Magnetic Sw	On/Off	NA	Aprox Pers Creep-H-96 Pers Approach-H-128	Shaft	None
HOTLS1	Top Overtravel	Lilly	On/Off	NA	Pers 21 Salt 54	Lilly Controller	None
HOTLS2	Top Overtravel	Magnetic Sw	On/Off	NA	55	Headframe	None
HOTLS3	Top Overtravel	Lever LS	On/Off	NA	64	Headframe	None
HPDDSLS	Pers Top Stop Dk 2	Magnetic Sw	On/Off	NA	0	Headframe	None
HPSDSLS	Pers Top Stop Dk 1	Magnetic Sw	On/Off	NA	-9	Headframe	None
HSSLS	Material Top Stop	Magnetic Sw	On/Off	NA	49	Headframe	None
Later	Ind Up & Down Zone	Lever LS	On/Off	NA	-200 Hoisting -1950 Lowering	Lilly Panel	Bell on Oper
LBETLS	Ind Left Brk Exc Tvl	Lever LS	On/Off	NA	Exc Tvl	Brake Piston	Annunciator Pnl
LBRLS	Lft Brk Rlse	Lever LS	On/Off	NA	Brk Rel	Brake Piston	None
LBSLS	Lft Brk Set	Lever LS	On/Off	NA	Brk Set	Brake Piston	None
LBWLS	Ind Left Brk Wear	Lever LS	On/Off	NA	Brk Wear	Brake Piston	Annunciator Pnl
LOS	Lilly Overspeed	Lever LS	NA	NA	Aprox 10% Overspeed	Lilly	Annunciator Pnl
LOTLS1	Bot Overtravel	Lilly	On/Off	NA	Pers -2186 Salt -2198	Lilly Controller	None
LOTLS2	Bot Overtravel	Magnetic Sw	On/Off	NA	-2201	Load Pocket	None
LOTLS3	Bot Overtravel	Lever LS	On/Off	NA	-2221	Load Pocket	None
LPDDSLS	Pers Bot Stop Dk 2	Magnetic Sw	On/Off	NA	-2145	Station	None
LPSDSLS	Pers Bot Stop Dk 1	Magnetic Sw	On/Off	NA	-2154	Station	None
LS16 & 16	AInd Shaft Gate Open	Lever LS	On/Off	NA	NA	At Shaft Gate	Oper & Annuc Panel
LSSLS	Material Bot Stop	Magnetic Sw	On/Off	NA	-2190	Station	None
RBETLS	Ind Right Brk Exc Tvl	Lever LS	On/Off	NA	Exc Tvl	Brake Piston	Annunciator Pnl
RBRLS	Rt Brk Rlse	Lever LS	On/Off	NA	Brk Rls	Brake Piston	None
RBSLS	Rt Brk Set	Lever LS	On/Off	NA	Brk Set	Brake Piston	None
RBWLS	Ind Right Brk Wear	Lever LS	On/Off	NA	Brk Wear	Brake Piston	Annunciator Pnl
SRLS1	Slack Rope	Lever LS	On/Off	NA	Slack Rope	Hst Hse Rope Way	None

Note: All depth indications (setpoints) are approximate and may be changed due to operational conditions

Working Copy

3.6.2.1 The Loading Bin Control Panel (Figure UH II-16)

3.6.2.1.1 The Skip Overtravel light becomes energized when the conveyance becomes sufficiently overloaded to stretch the rope supporting the conveyance to activate the lower overtravel magnetic limit switch.

3.6.2.1.2 The "Skip in Position" light is activated by a limit switch that indicates that the skip is in position to receive salt dumped from the bin.

3.6.2.1.3 The Load Gate Open, Load Gate Closed, Charge Gate Open and Charge Gate Closed indicating lights indicate the position of their respective gates.

3.6.2.1.4 The Open Load Gate and Open Charge Gate pushbuttons are used to control the position of the gates. Each pushbutton operates its associated solenoid valve and cylinder to open its gate when the pushbutton is depressed and close thte gate when the pushbutton is released. The gates are interlocked for normal operation to prevent both gates from opening at once.

3.6.2.1.5 The Load Gate Open solenoid is also interlocked with the Skip In Position and Skip Over-travel functions to prevent opening the Load Gate when the skip is not in loading position.

3.6.2.1.6 It may be necessary to momentarily open both gates in order to dislodge a hangup in the loading system. Jto provide this capability, the load and charge gate interlocks may be bypassed by operating the Gate Interlocks Bypass spring-return keyed switch. Because of the potential for uncontrolled release of salt, this switch requires a key for operation and thus provides for administrative control of the interlock bypass process. The operator must hold the switch in the Bypass position, then press both the Open Charge Gate and Open Load Gate pushbuttons to perform this operation. The Skip In Position and Skip Over-travel interlocks remain functional for this operation to prevent opening the Load Gate when their interlock conditions are not satisfied.

Working Copy

TABLE UH II-2 Salt Shaft Instrumentation Controls & Interlocks

Instrument Numbers	Function	Type	Range	Accuracy	Setpoint	Instrument Sensor Location	ReadOut Location
Salt Loading Control Panel							
None	Emergency Stop	Two Pos PB	Off/On	NA	NA	Control Panel	NA
None	Ind Load Gate Open Grn	Incand	NA	NA	NA	Bin Door Frame	Control Panel
None	Ind Charge Gate Open Grn	Incand	NA	NA	NA	Hopper Door Frame	Control Panel
None	Ind Charge Gate Clsd Red	Incand	NA	NA	NA	Hopper Door Frame	Control Panel
None	Ind Load Gate Clsd Red	Incand	NA	NA	NA	Bin Door Frame	Control Panel
None	Ind Skip Overloaded Red	Incand	NA	NA	NA	Salt Sump Framework	Control Panel
None	Open Load Gate	Two Pos PB	Off/On	NA	NA	Control Panel	NA
None	Open Charge Gate	Two Pos PB	Off/On	NA	NA	Control Panel	NA
None	Ind Skip In Pos Red	Incand	NA	NA	NA	Salt Sump Framework	Control Panel
None	Gate Intlk Bypass	Two Pos Sp Ret	NA	NA	NA	Control Panel	NA
Blaster Control Panel							
None	Opn Air Sol, E Blstr Sprng	Rtn PB	On/Off	NA	NA	Control Panel	None
None	Opn Air Sol, N Blstr Sprng	Rtn PB	On/Off	NA	NA	Control Panel	None
None	Opn Air Sol, W Blstr Sprng	Rtn PB	On/Off	NA	NA	Control Panel	None

Working Copy

3.7 System Interfaces [**All Shafts & Hoists, Refer to Chapter G**]

3.7.1 UH04 Salt Hoist

3.7.1.1 The Salt Hoist system requires service from the Electrical System ED00, the Plant Building, Facilities and Miscellaneous Equipment CF00, the Compressed Air System CA00, and the Plant Monitoring and Communication System CM00. Normal lighting, control system, and signaling system power at 115 Volts, 60 Hertz is required.

3.7.1.1.1 ED00

The Salt Hoist system needs power at 480 volts, three phase, 60 Hertz with a power capacity of 2,700 KVA for the solid state DC supply. The Salt Hoist system also needs power at 2,400 volts, three phase, 60 Hertz with a power capacity of 3,000 KVA to power the 2,200 HP motor of the back up power MG set. Normal lighting, control system, and signaling system power at 115 Volts, 60 Hertz is required.

3.7.1.1.2 CF00

The CF00 System must supply the physical support structure for the main hoist house.

3.7.1.1.3 CA00

Compressed air is needed to release the brakes on the Hoist drum, and to open the collar doors of the Salt shaft.

3.7.1.1.4 CM00

Back up communication between the hoist operator, and the conveyance is accomplished with the rope-a-com system. The CM00 supplies this system for the conveyance and the hoist operator.

The CM00 must supply the capability to monitor at least six contact points so that the CMR will be made aware of certain operating conditions of the Salt Hoist.

3.7.1.2 The Salt Hoist system is a secondary interface with the EM00 system because the Salt Hoist system provides access to the experiments in the Salt shaft. The Salt Hoist system is a secondary interface with the CA00, the ED00, and any other systems that uses the shaft for access, and needs support for maintenance and installation.

Working Copy

3.7.2 UH05 Salt Shaft

3.7.2.1 There are no primary interface systems associated with the Salt shaft system. The shaft system does not require the services of any other system.

3.7.2.2 The Salt shaft system provides services to the electrical distribution system ED00, the environmental monitoring system EM00, and the Underground Ventilation System VU00.

3.7.2.2.1 ED00

The Salt shaft provides the path and support base and supports for the power lines required to supply 13.8 kV power to the underground.

3.7.2.2.2 EM00

The Salt shaft provides the path and support base and supports for the instrument cables needed for the geomechanical experiments being conducted in the shaft.

3.7.2.2.3 The Salt shaft provides the location for the geomechanical experiments conducted in the shaft.

3.7.2.2.4 VU00

The Salt shaft provides an additional path for the incoming fresh air to the underground to enable the VU00 system to perform its function.

4.0 OPERATIONS **[All Shafts & Hoists, Refer to Chapter G]**

4.1 UH04 Salt Hoist & Handling Equipment

The WIPP Site Operating Procedures which are controlled documents providing information regarding all current operating conditions and prerequisite for the Salt Hoist and the associated machine equipment, subsystem UH04.

5.0 SYSTEM LIMITATIONS, SETPOINTS AND PRECAUTIONS **[All Shafts & Hoists, Refer to Chapter G]**

5.1 UH04 Salt Hoist System

5.1.1 Operating Limits

The operating limits are listed in Table UH II-2. Proper system and component operation can not be assured if these limits are exceeded.

Working Copy

5.1.2 Setpoints and Alarms, SALT Hoist System

The major setpoints involved in the controls of the AIS Hoist System are listed in Table UH II-4. All the system status and alarm signals are local except for six status conditions monitored by the CM01 system. The six status conditions monitored are: Hoist in Salt Operating Mode, Personnel Mode Single Deck, Personnel Mode Double Deck, Reduced Speed Operation, Hoist Emergency Stop, and Men Working in Shaft.

5.1.3 Precautions Salt Hoist System

5.1.3.1 Shaft inspections and repair work in the shaft will be performed from substantial platforms equipped with bonnets or other overhead protection.

5.1.3.2 Cage doors (if installed) shall remain closed when the conveyance is being hoisted or lowered.

5.1.3.3 Hand held radios are not to be used inside the hoist electrics room.

5.1.3.4 When slinging equipment underneath the conveyance the materials deck must not be loaded.

5.1.3.5 After a Controlled Stop activated by the push button at the operators console, the E-Stop button must be pressed, the hoist placed in the manual mode, and the control power reset, before restarting hoisting operations.

TABLE UH II-3 Operating Limits Salt Hoist

PARAMETER	LIMIT
Working Depth	2,900 Feet
Maximum Payload	8 Tons
Maximum Working Speed	1,800 Fpm
Electric Room Temperature	68 to 75 Degrees F
Hoist House Temperature	40 to 105 Degrees F
Compressed Air	85 to 110 Psi
Surge Bin Capacity	80 Tons (Depends on Material)
Muck Characteristics	Easily Pulverized

Working Copy

TABLE UH II-4 Control Setpoints Salt Hoist

PARAMETER	FUNCTION	SETPOINT
Brake Wear	Protective Stop	Per Nordsberg Dwg 95060590
DC Motor Overtemp	Protective Stop	Open 120° C - close 105° C
Hoist Bearing High Temp	Protective Stop	125° F
Hoist Bearing Low Temp	Protective Stop	60° F
Generator Overtemp	Protective Stop	150° C
Synchrn Mot Overtemp	Protective Stop	170° F
MG Set Brgs Overtemp	Protective Stop	95° C
Field Overcurrent	Protective Stop	96 Amps
IntPhse Reactor Overtemp	Protective Stop	200° C
Hoist Mn Bear Oil Flow	Protective Stop	Low Flow for 1.5 sec
Loss Mn Bear Oil Press	Annunciate Only	30 - 50 PSI
Loss of DYNAPAR	Controlled Stop	Note 1
Pulse Loss Relay	Controlled Stop	Note 1
Failure to Exit Dump	Controlled Stop	15 Seconds
Brake Fail to Set	Controlled Stop	2 Seconds
Lilly Gear Loss	Controlled Stop	Loss of Lilly Motion Above 30% Speed
Progrmr Out of Sequence	Controlled Stop	Note 2
Brake Fail to Release	Controlled Stop	2 Seconds
Pwr Conv Cooling Loss	Controlled Stop	SILCO Fan Loss
Transformer Prob	Controlled Stop	Transformer Over Temp
Timed Overcurrent	Controlled Stop	6,400 Amps @ 2-5 sec
Slack Rope	Controlled Stop	18* Inch Below Taut Rope
Ground Fault (ARM/FLD)	Controlled Stop	Hard Ground
AC Power Loss	Emergency Stop	Open Breaker Contact
Lilly Overspeed	Emergency Stop	880/1980 Fpm (Note 3)

Working Copy

TABLE UH II-4 Control Setpoints Salt Hoist (Cont)

PARAMETER	FUNCTION	SETPOINT
Low Brk Air Pressure	Emergency Stop	65 Psi
Dynamic Braking Fault	Emergency Stop	Dyn Brk Contactor de-energized
Motor Overvoltage	Emergency Stop	600 VDC
Motor Overspeed	Emergency Stop	1980 FPM (8.8VDC)
Motor Overcurrent	Emergency Stop	8,750 Amps
Motor Field Loss	Emergency Stop	70 Amps, not field economy
Field Cur Isol Loss	Emergency Stop	Self-diagnostic
Arm Cur Isolator Loss	Emergency Stop	Self-diagnostic
Electronic Pow Sup Loss	Emergency Stop	Note 1
Converter A Fault	Emergency Stop	Note 1
Converter B Fault	Emergency Stop	Note 1
Synch. Mtr. Starter Open	Emergency Stop	Note 4
Harmonic filter Sw. Open	Emergency Stop	Limit switch
Failure to Decelerate	Emergency Stop	93%, 50% Speed
AC Bridge Power Und Volt	Emergency Stop	Phase Unbal, Low Voltage Factory Set and Sealed

Note 1 Self monitoring circuits monitor the component performance. Any noted failure will provide an Output alarm signal.

Note 2 The control system monitors various events that could cause the programmer to become out of sync with the conveyance.

Note 3 The lower setpoint is for the Personnel mode, the higher setpoint is for the personnel mode. The speeds are approximate. Set the gaps per the Lilly O & M manual.

Note 4 The synchronous motor starter controls monitor various motor parameters, and trip the motor starter off-line in the event of a problem.

* This is a nominal dimension. The clearance must be large enough to prevent tripping the slack switch when the conveyance is at the top stop.

Working Copy

6.0 OFF-NORMAL EVENTS AND RECOVERY [**All Shafts & Hoists, Refer to Chapter G**]

6.1 UH04 Salt Hoist

Controlled WIPP Operating Procedures address the full scope of Off-Normal Events and Recovery scenarios which apply to the Salt Hoist in subsystem UH04. The following abnormal conditions are addressed:

- Hoist drive motor failure
- Brake failure in set position
- Brake failure in released position

7.0 MAINTENANCE [**All Shafts & Hoists, Refer to Chapter G**]

The full scope of maintenance procedures are in the WIPP Controlled Procedures Program. The maintenance program included corrective maintenance, preventative maintenance, in-service inspection and preventative maintenance. The controlled maintenance program which includes third parties participation independent and procedures addresses the following Salt Hoist (UH04) devices and salt shaft equipment (UH05).

7.1 Maintenance Approach [**All Shafts & Hoists, Refer to Chapter G**]

7.2 Corrective Maintenance [**All Shafts & Hoists, Refer to Chapter G**]

- Hoist Operator's Control Console
- Hoist Operator's Control Room Auxiliary Panels
- Lube Oil Pumps for Hoist Bearings
- Lube Oil Pumps for MG Set Bearings
- Bearings for MG Set and Hoist
- Speed Tachometer, Pulse Generator and Rotopulser
- Hoist Drive Motor
- Lilly Controller
- Refrigerator Dryer
- Compressed Air Tank

Working Copy

- Main Hoist Rope
- Collar Level, Station Level and Loading Pocket Level Local Control Panels for Hoist
- Headframe
- Conveyance
- Pringle Switch
- Hoist Brake and Engine
- Limit amp Controller
- Interphase Reactor
- DC Generator
- Synchronous Motor
- DC Motor & Synchronous Motor Field Exciter
- UH05 Salt Handling Shaft
- Shaft
- Conveyance Guides
- Salt Loading Level Control Panels
- Hopper and Bin Equipment
- "Pull Bob" Switches

7.3 Preventive Maintenance [**All Shafts & Hoists, Refer to Chapter G**]

7.4 In-Service Inspection and Predictive Maintenance [**All Shafts & Hoists, Refer to Chapter G**]

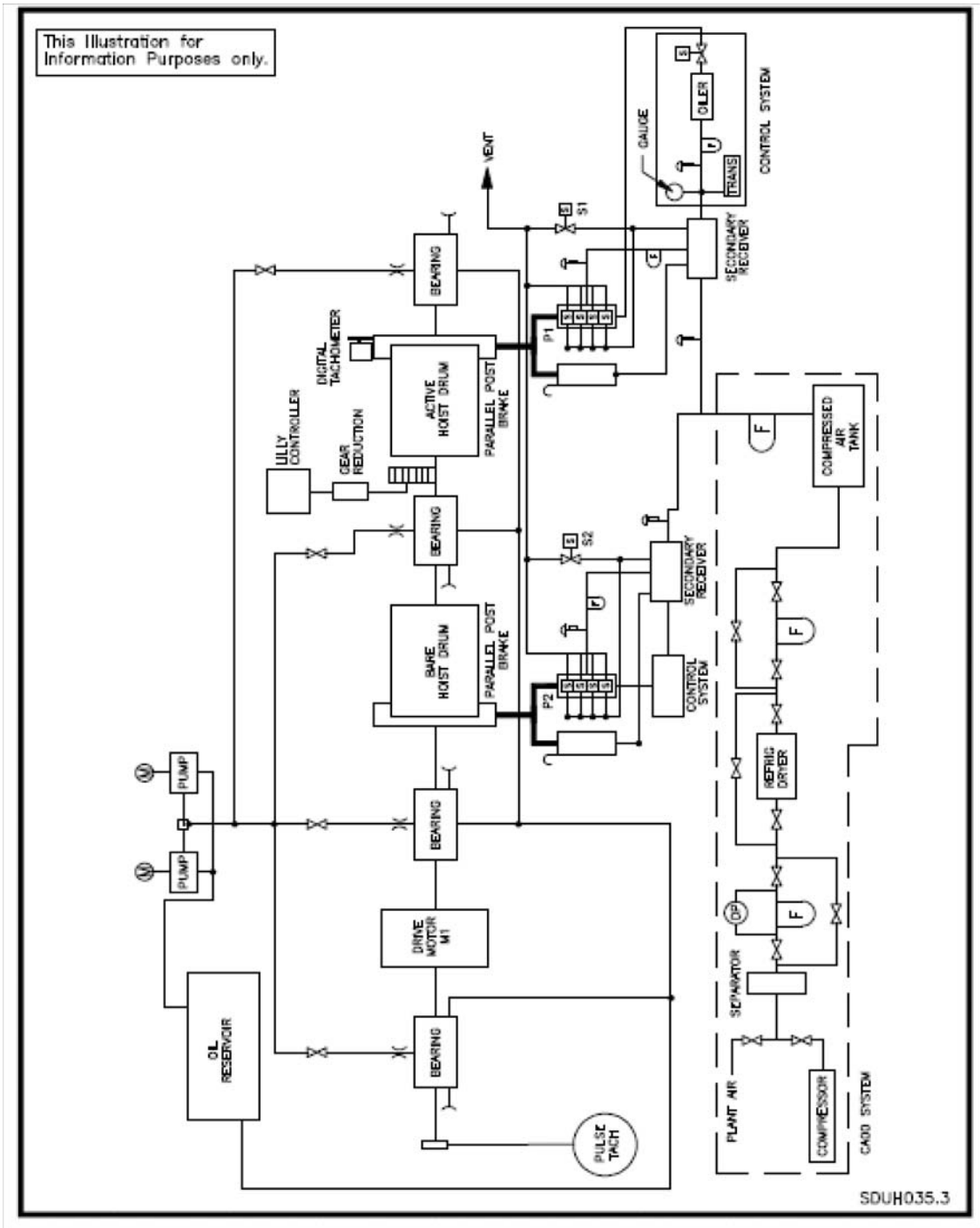

FIGURE UH II-1 Salt Hoist Piping Diagram

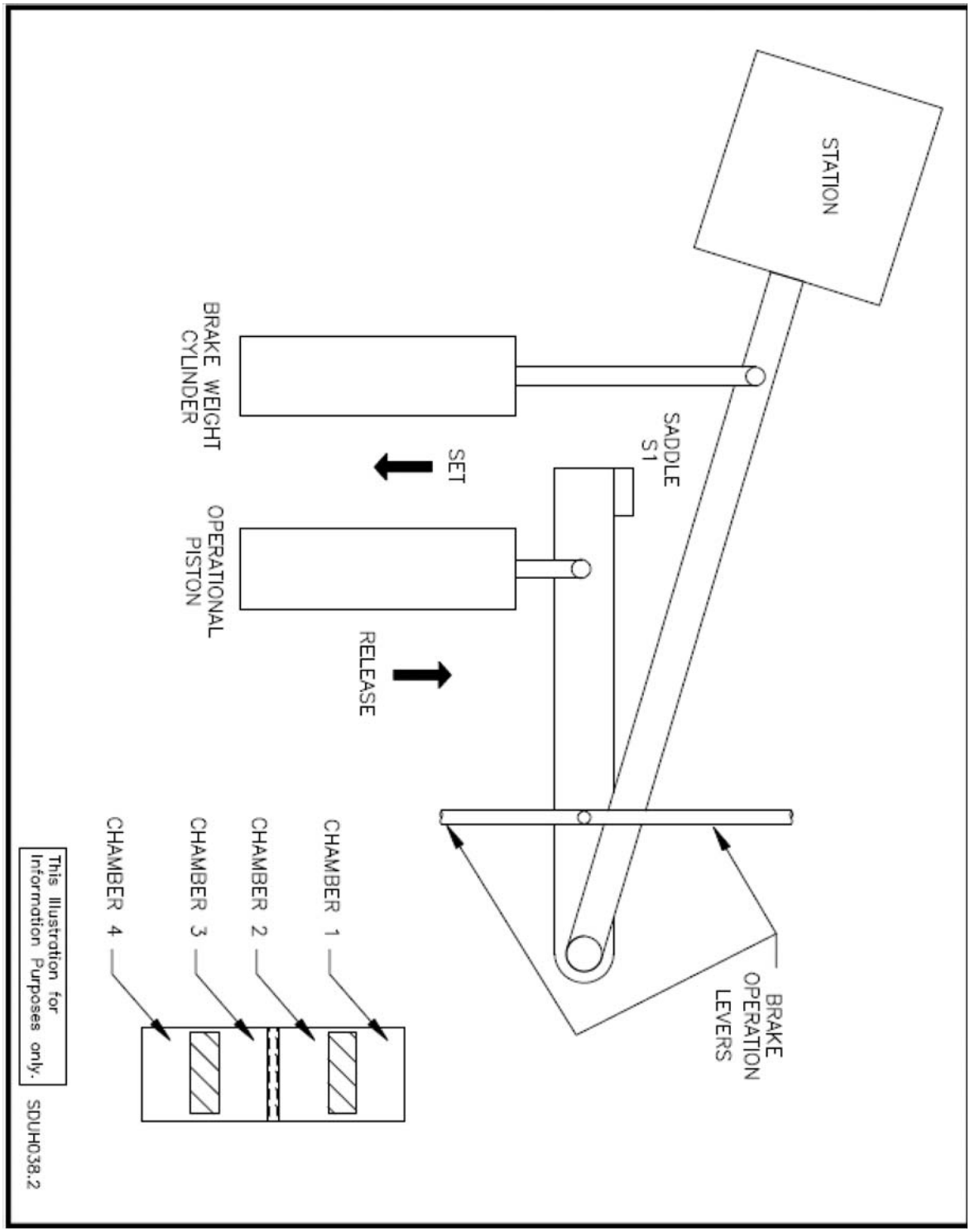

FIGURE UH II-2 Salt Hoist Brake Pistons

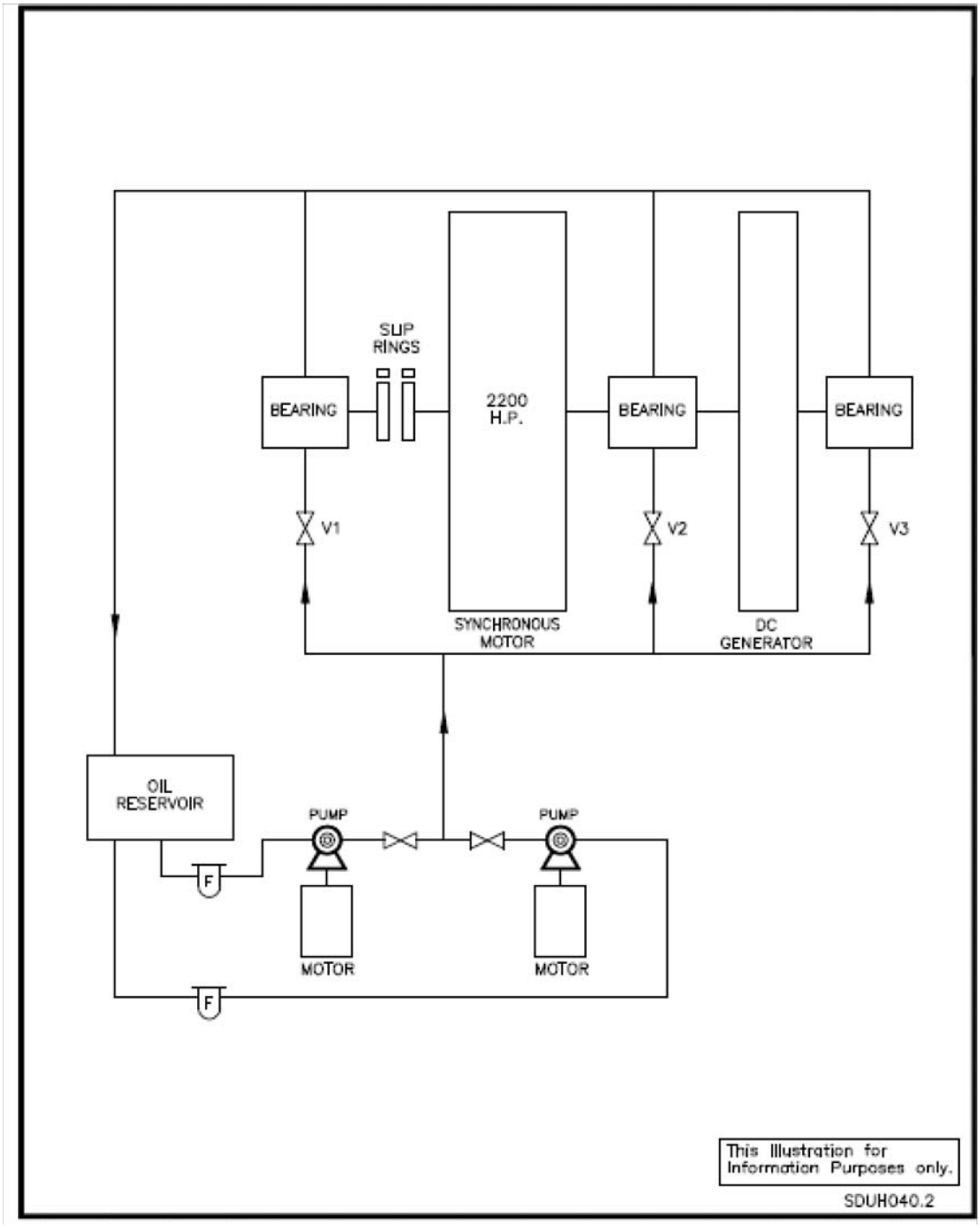

FIGURE UH II-3 Salt Hoist MG-Set

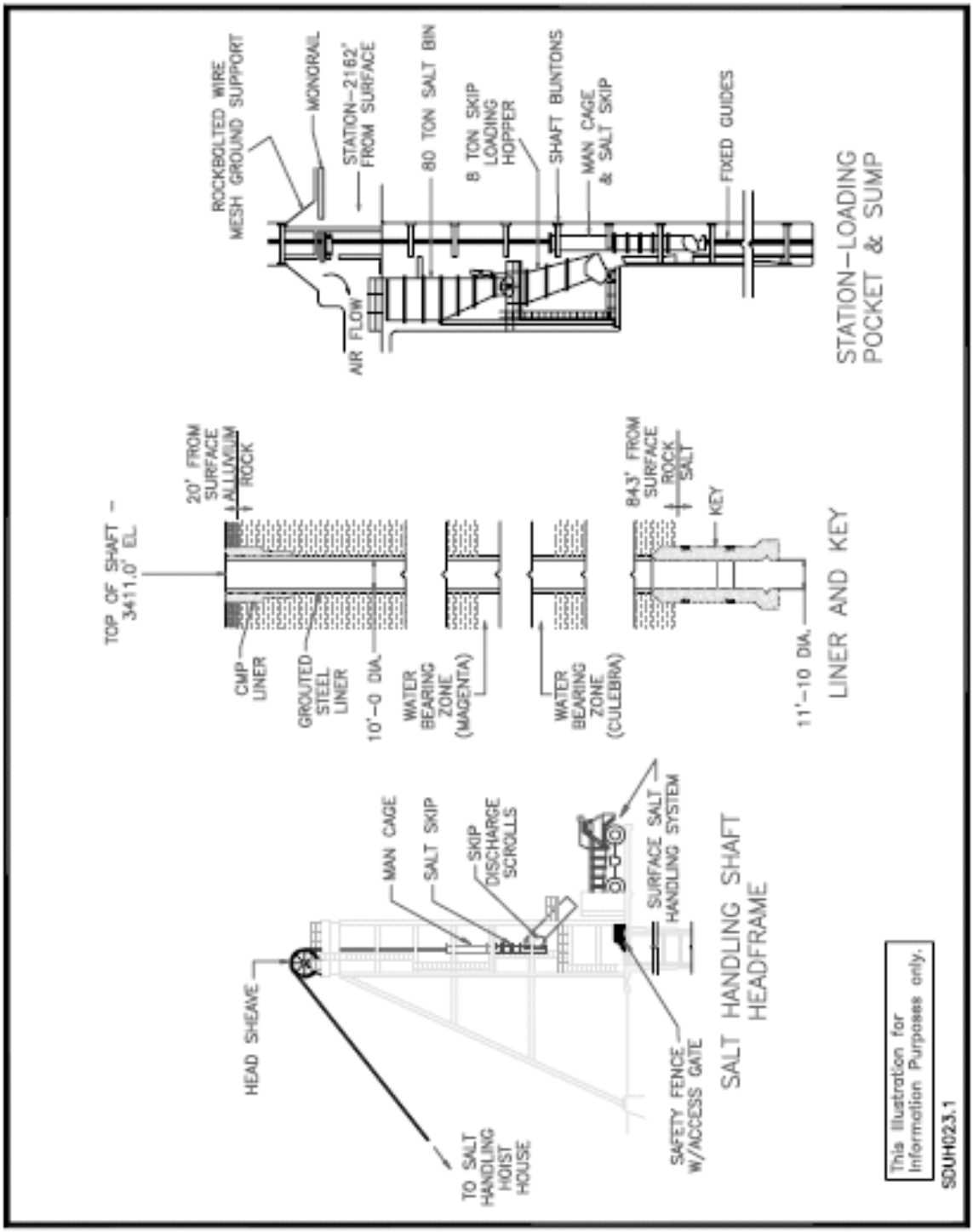

FIGURE UH II-4 Salt Handling Shaft and Headframe

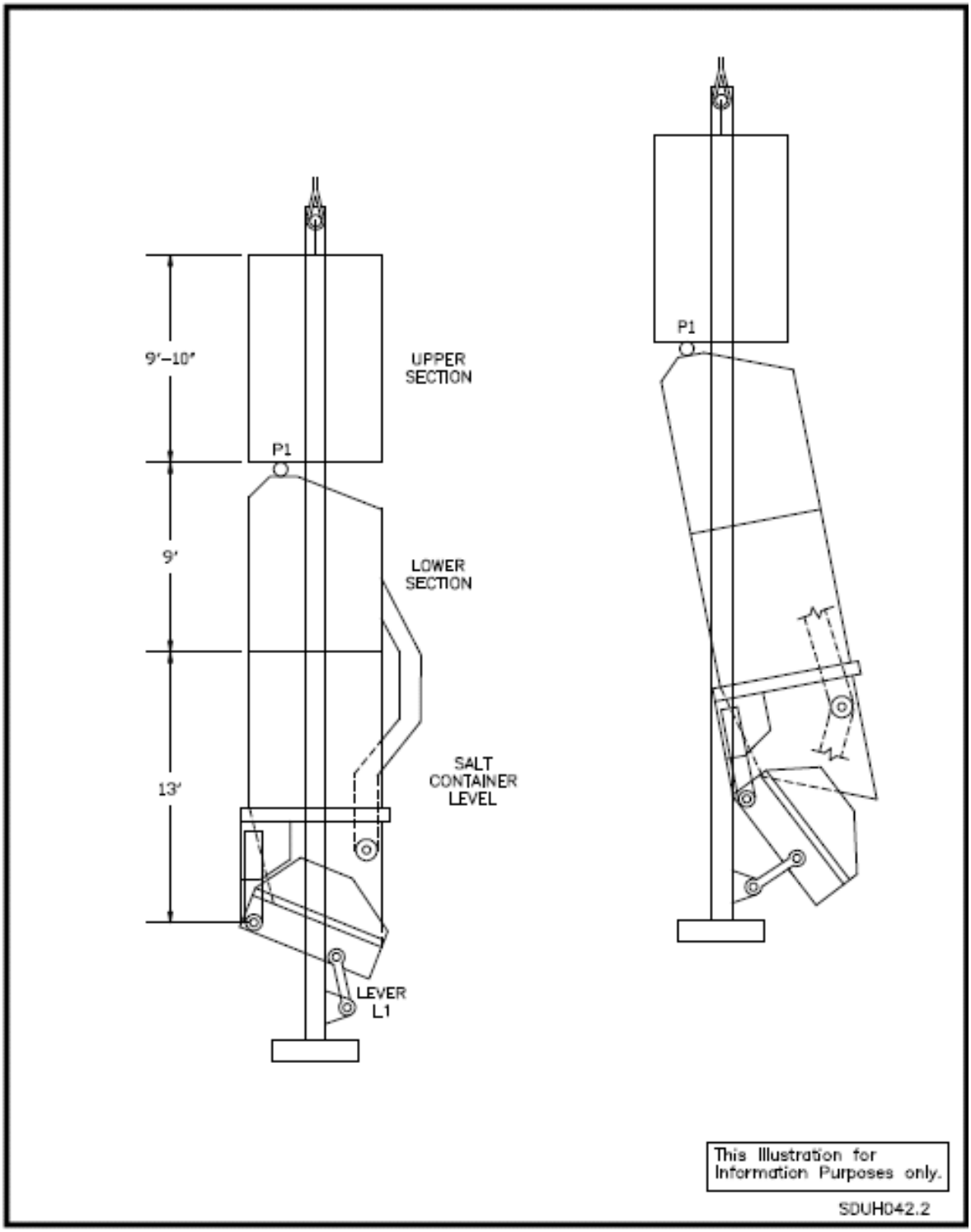

FIGURE UH II-5 Salt Conveyance Dump Action

Working Copy

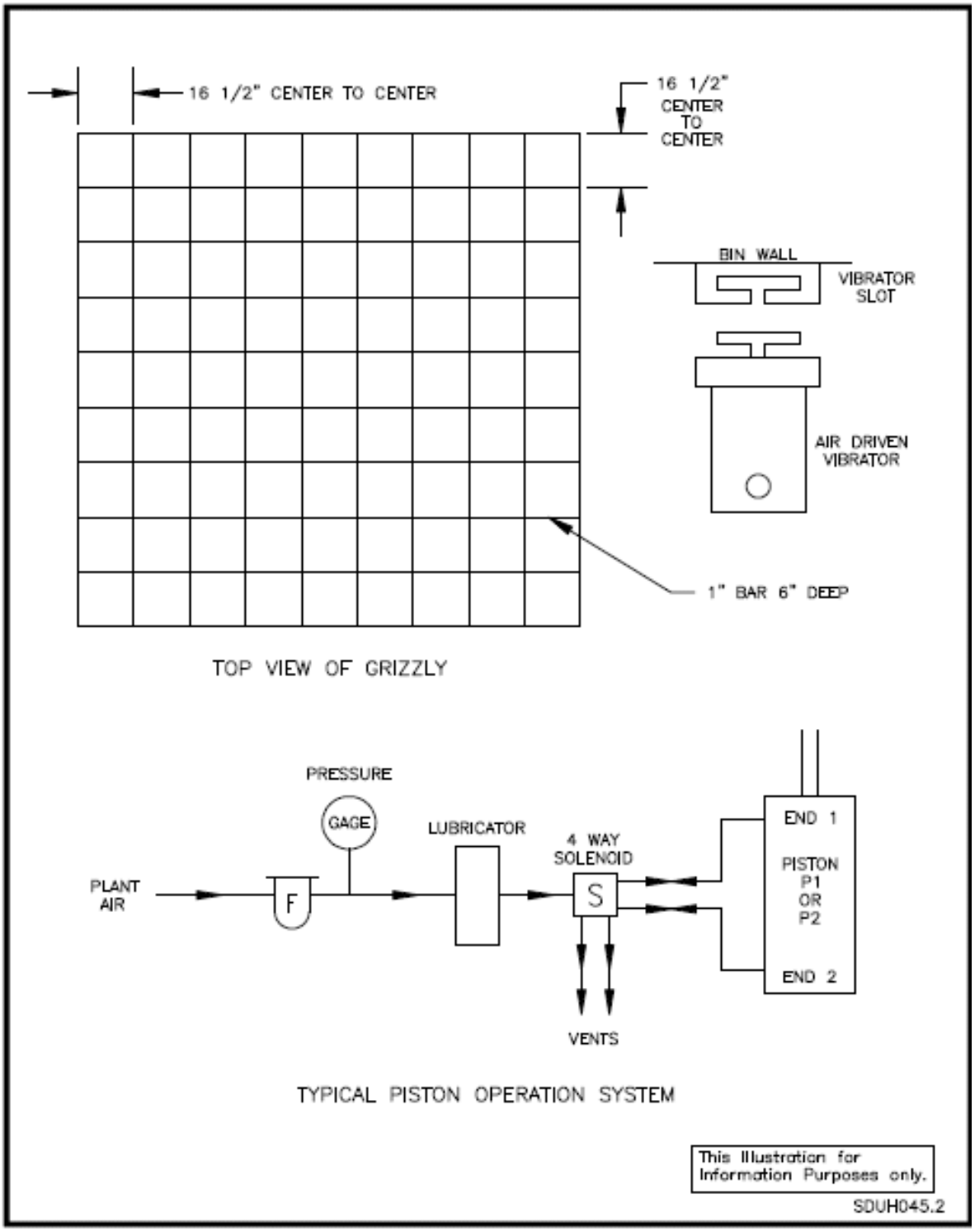

FIGURE UH II-6 Miscellaneous Salt Bin Information

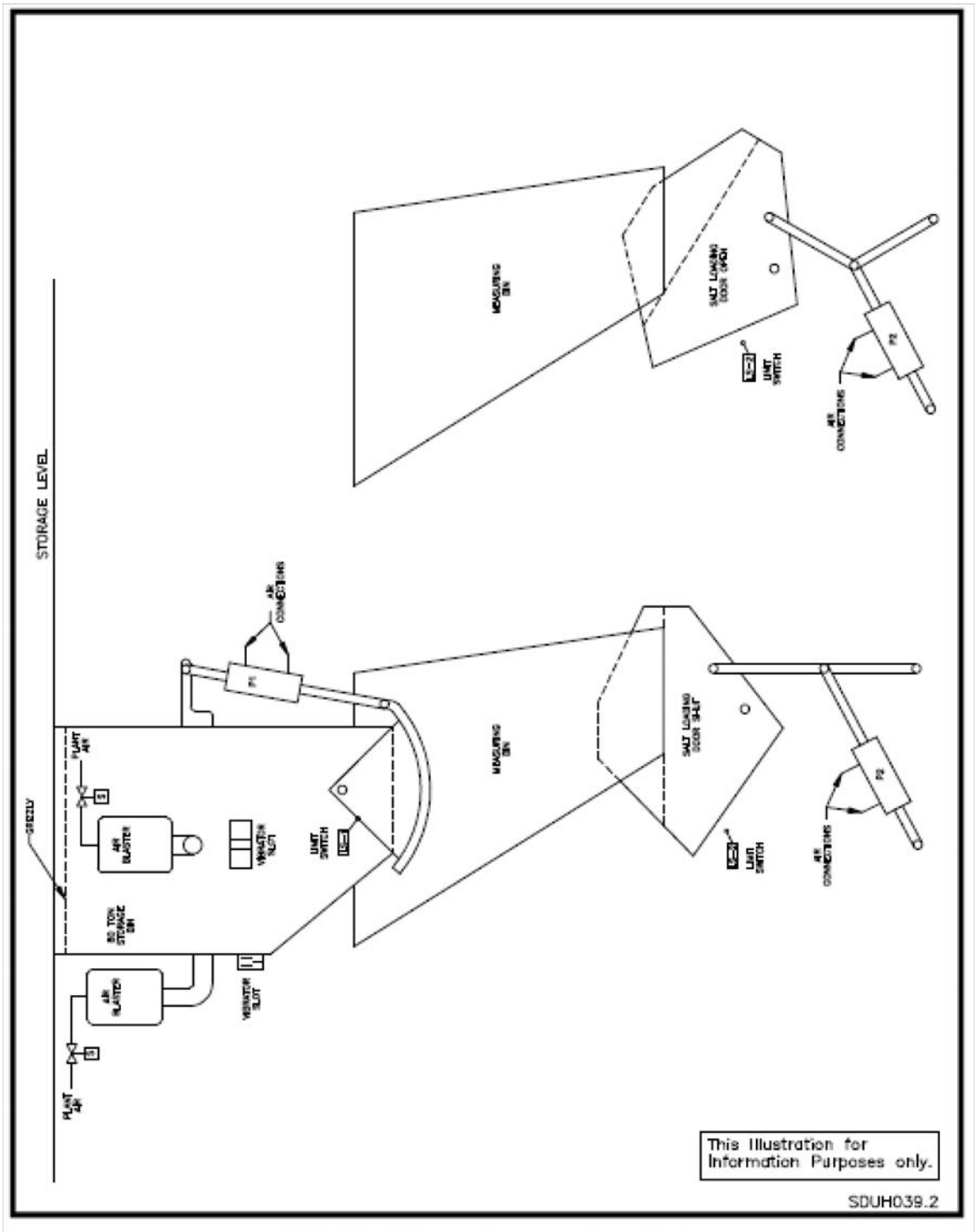

FIGURE UH II-7 Salt Loading Bins

Working Copy

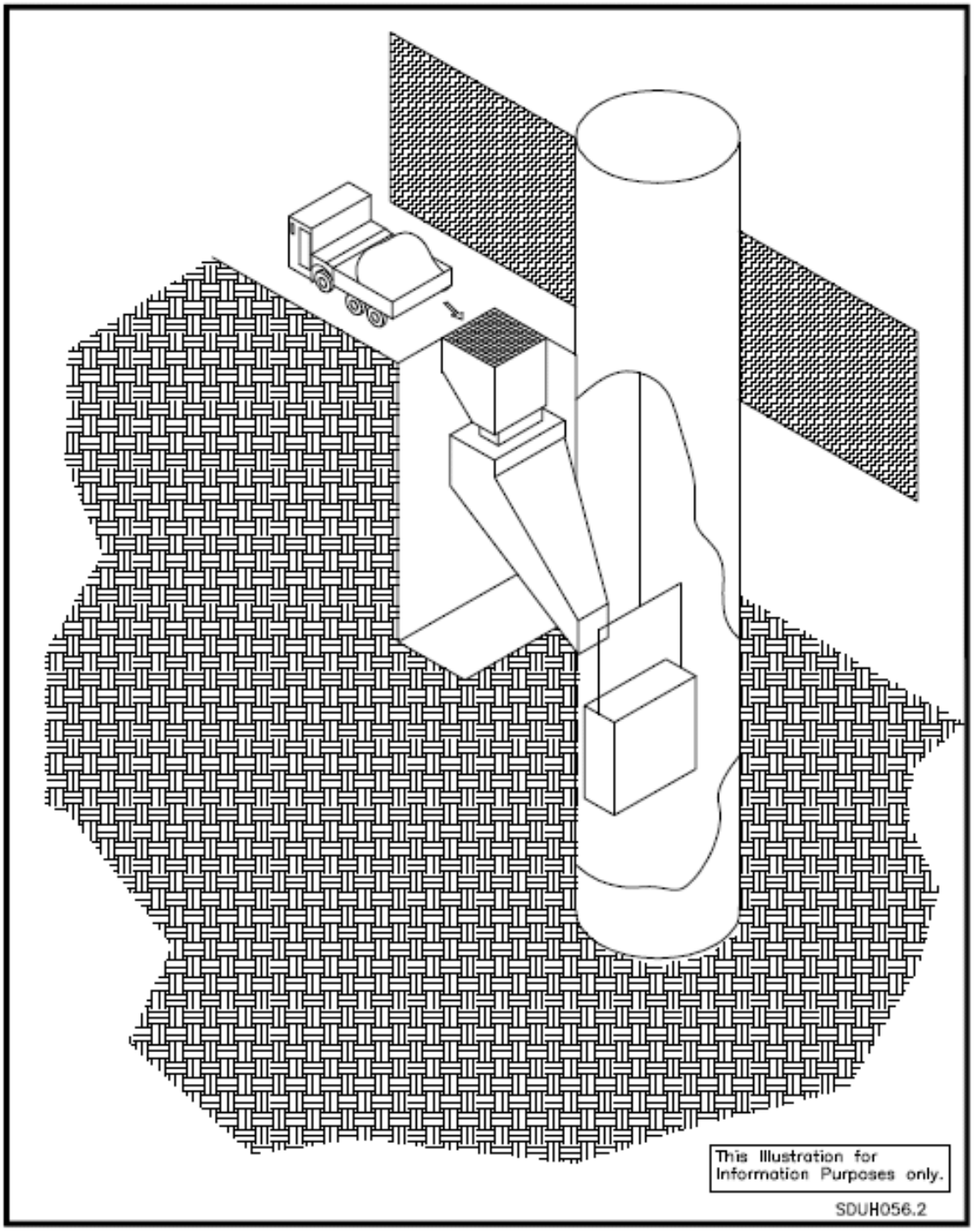

FIGURE UH II-8 Underground Salt Handling System

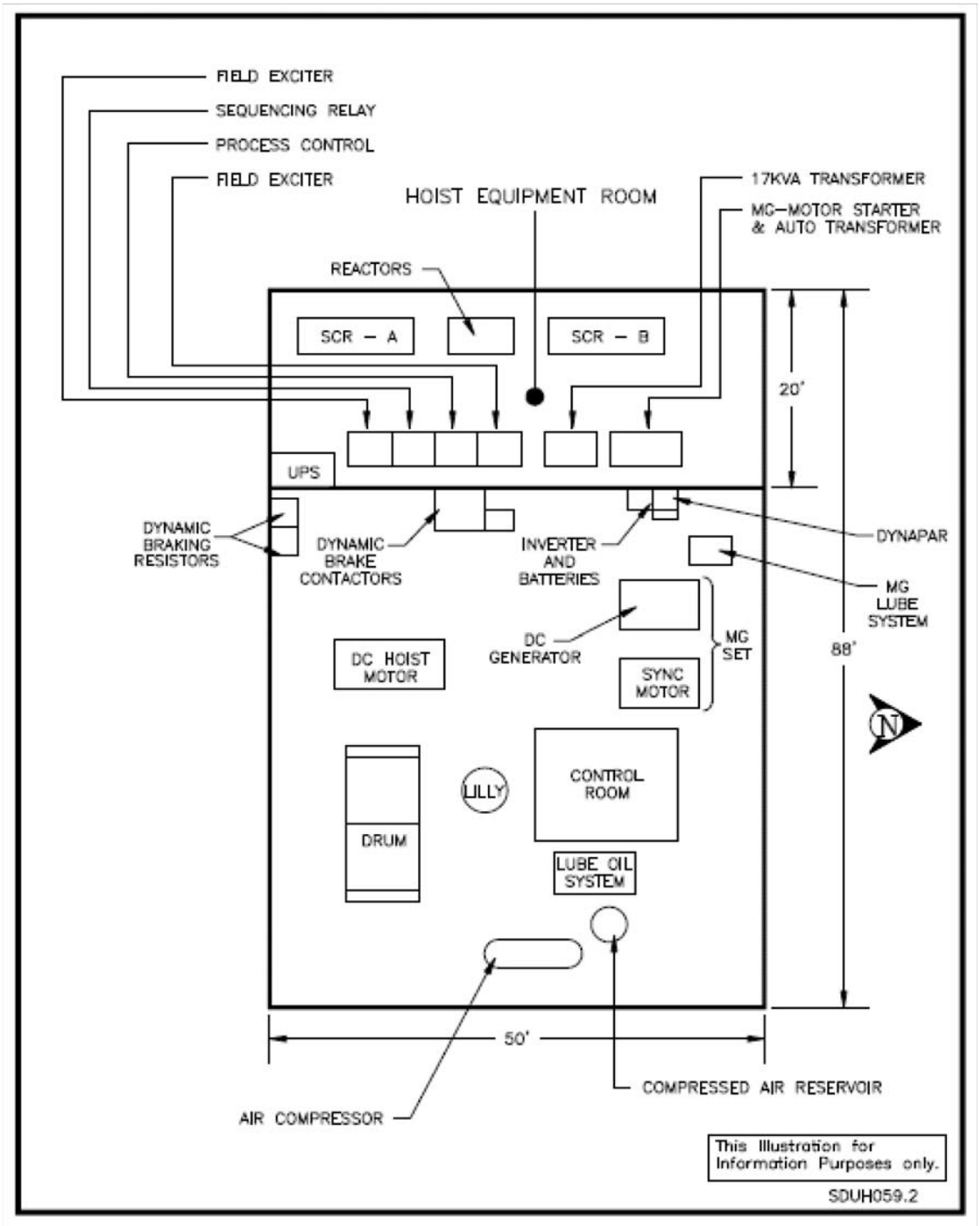

FIGURE UH II-9 Salt Hoist House Arrangement

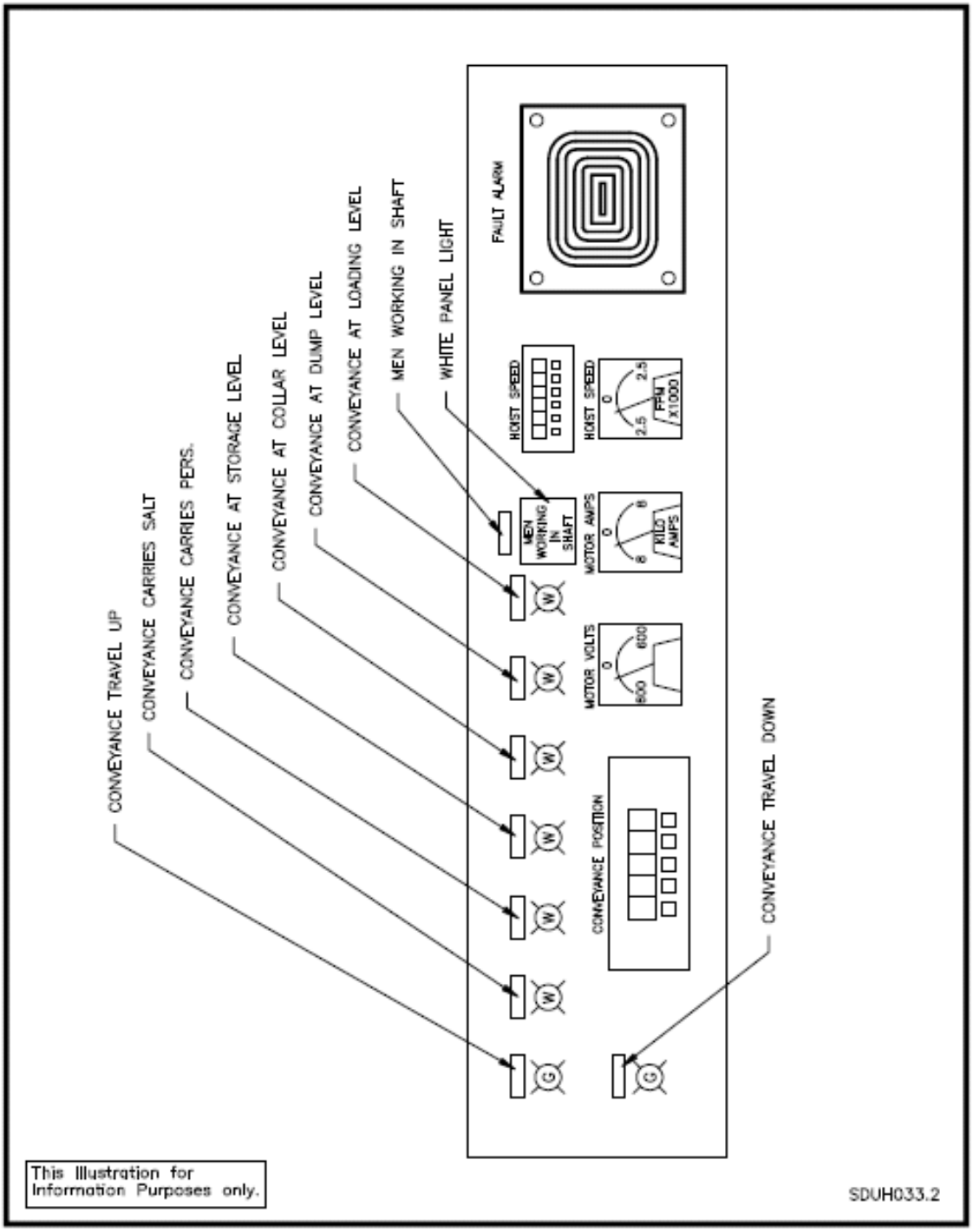

FIGURE UH II-10 Sloping section Salt Hoist Control Panel

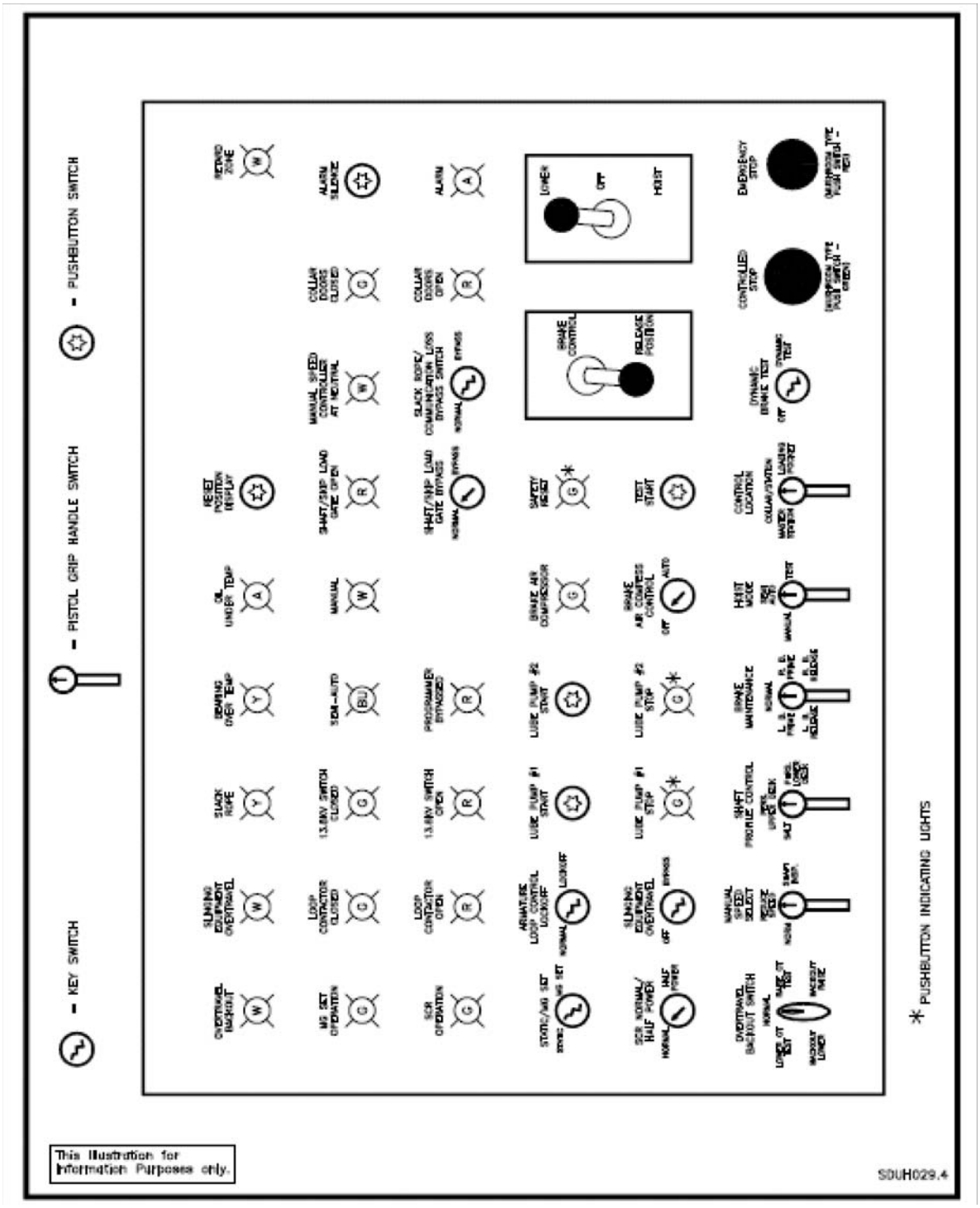

FIGURE UH II-11 Horizontal Section Salt Hoist Control Console

Working Copy

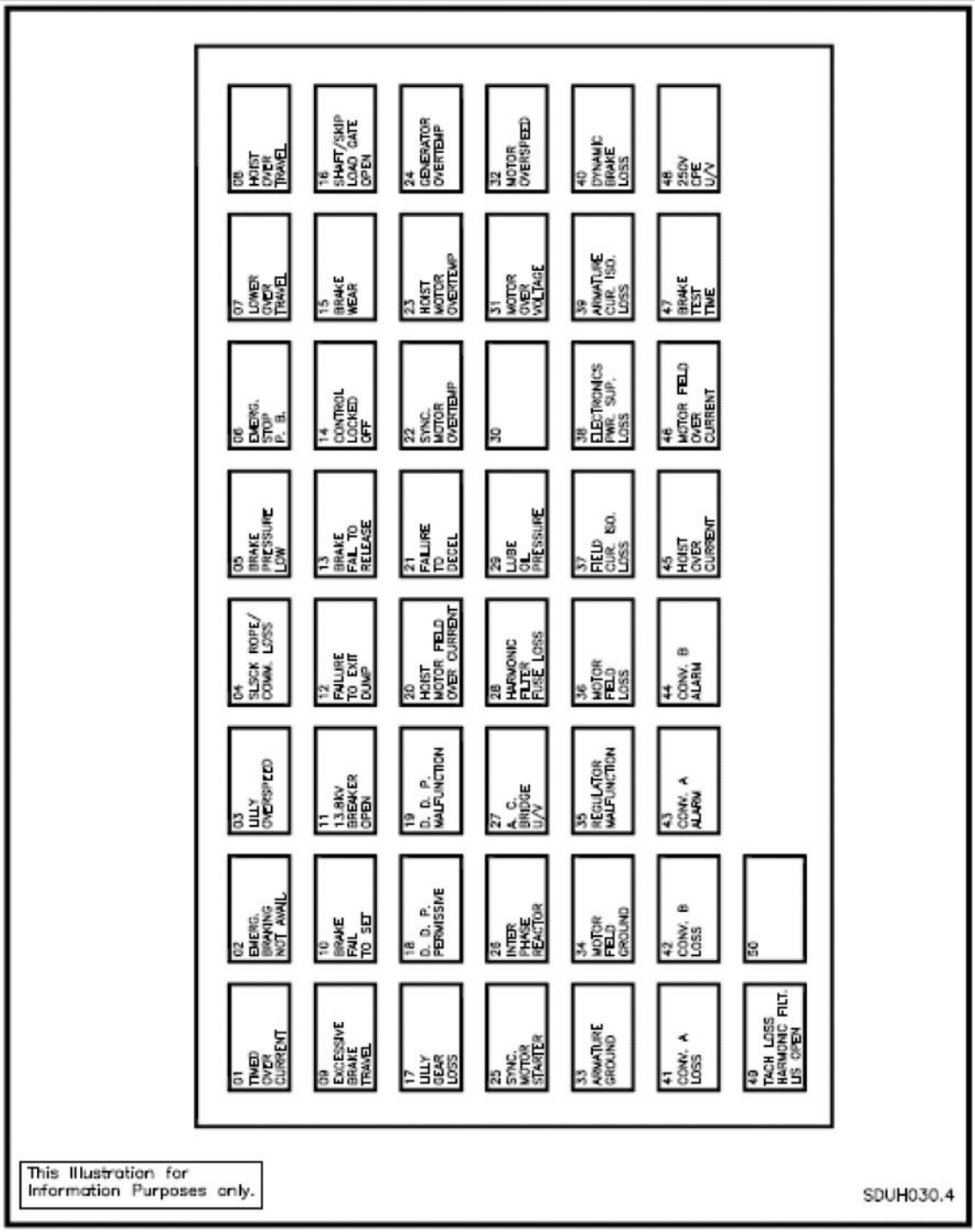

FIGURE UH II-12 Salt Hoist Annunciator Panel

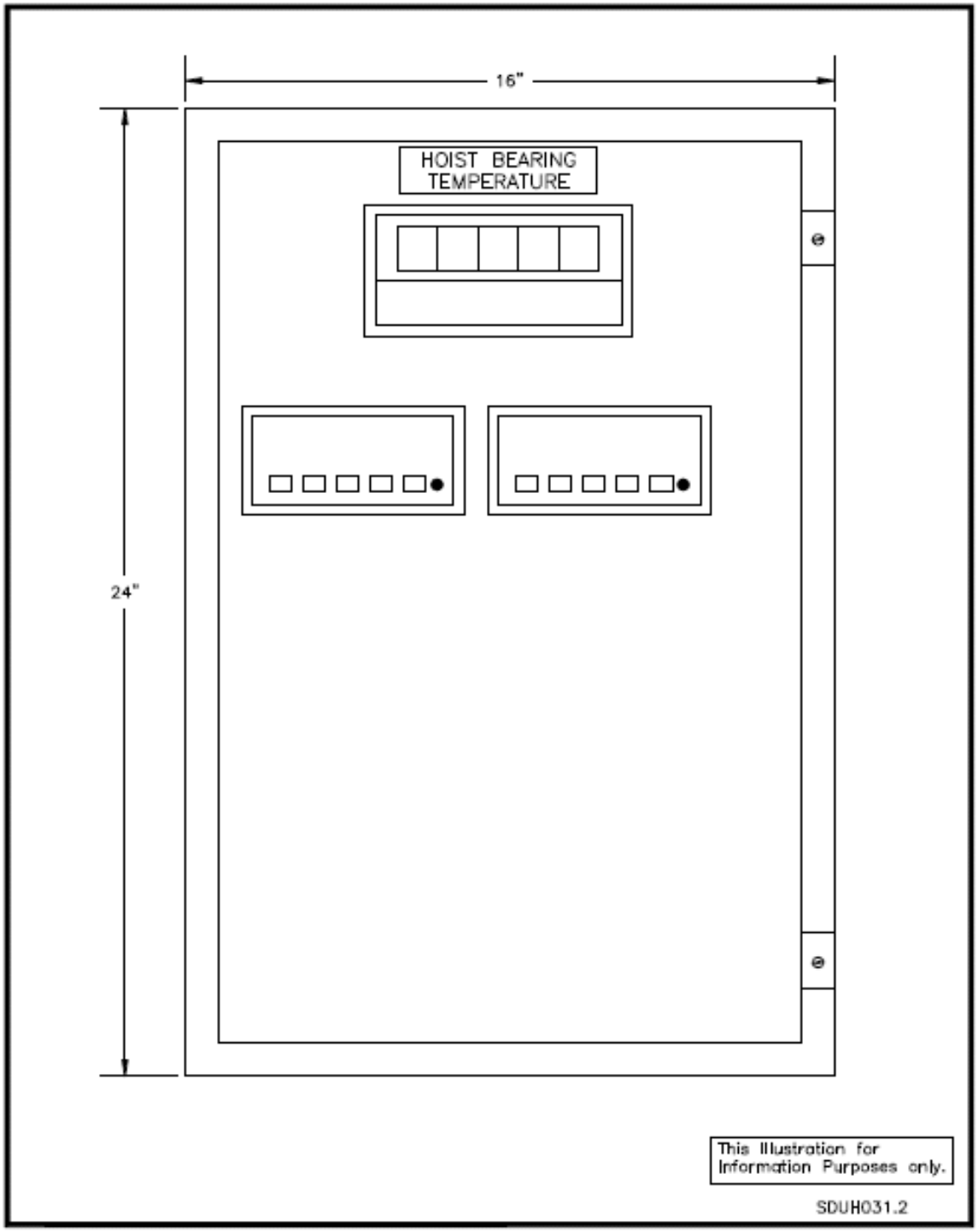

FIGURE UH II-13 Salt Hoist Bearing Temperature Panel

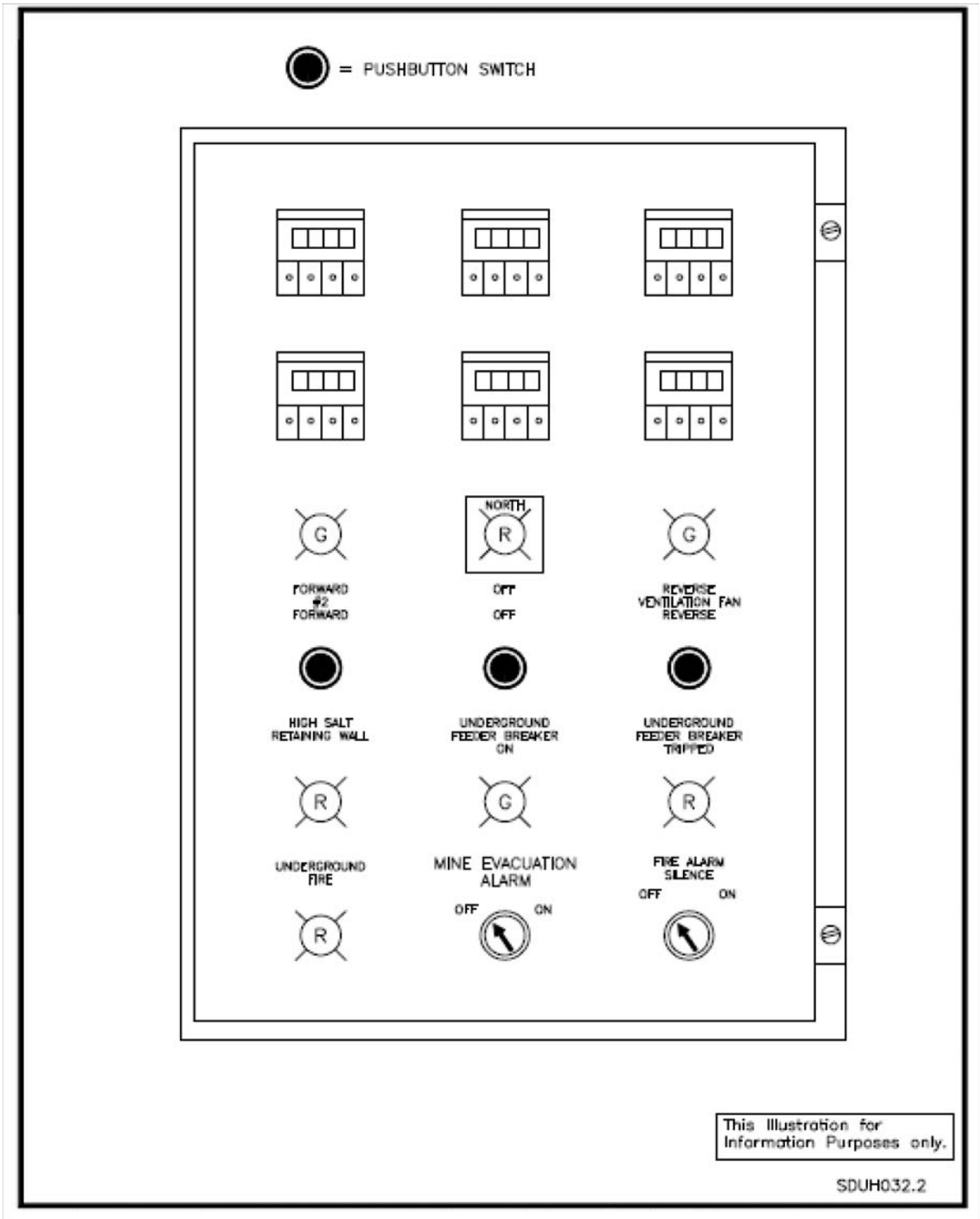

FIGURE UH II-14 Salt Hoist RTD Temperature Panel

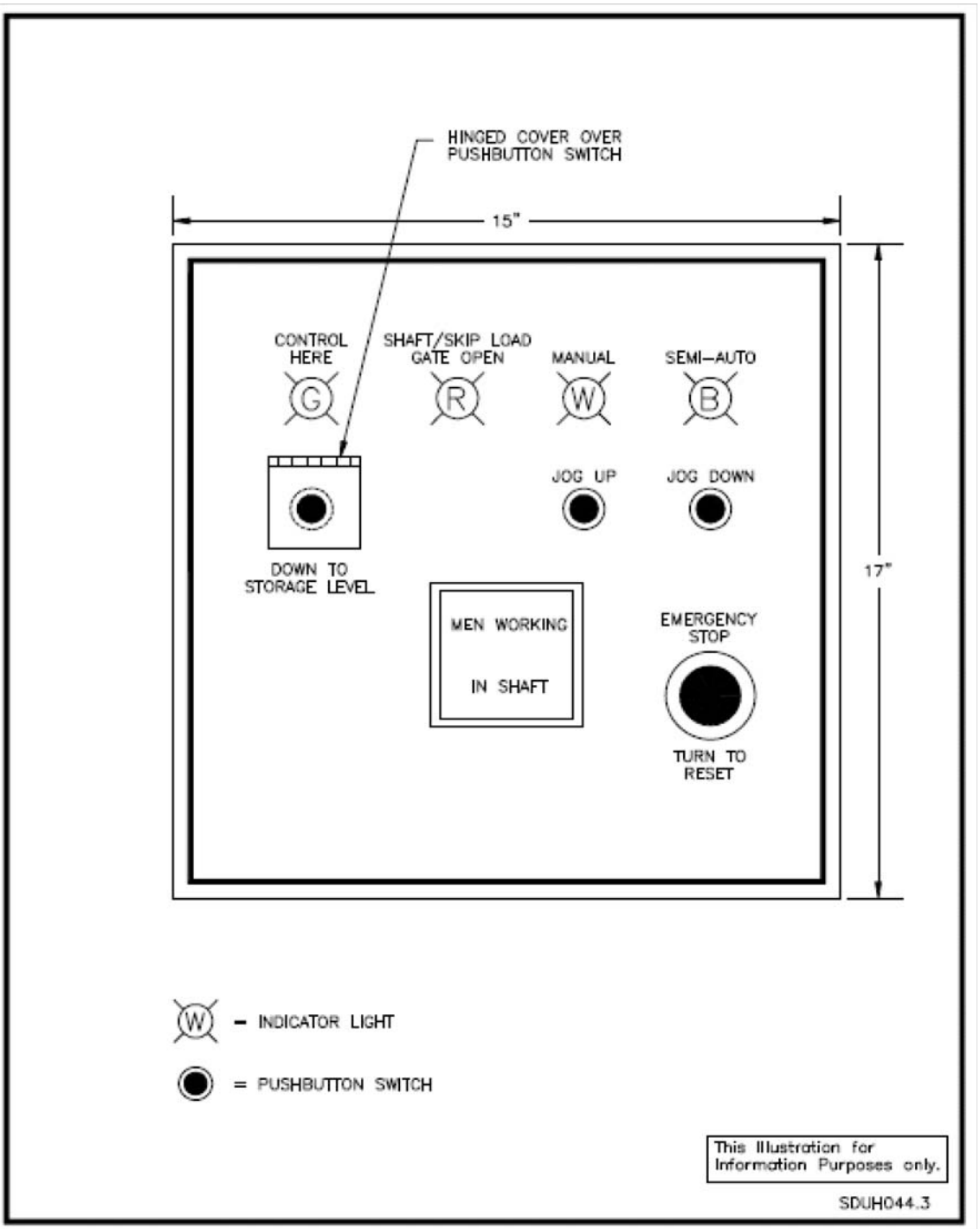

FIGURE UH II-15 Collar Level Station Control Panel

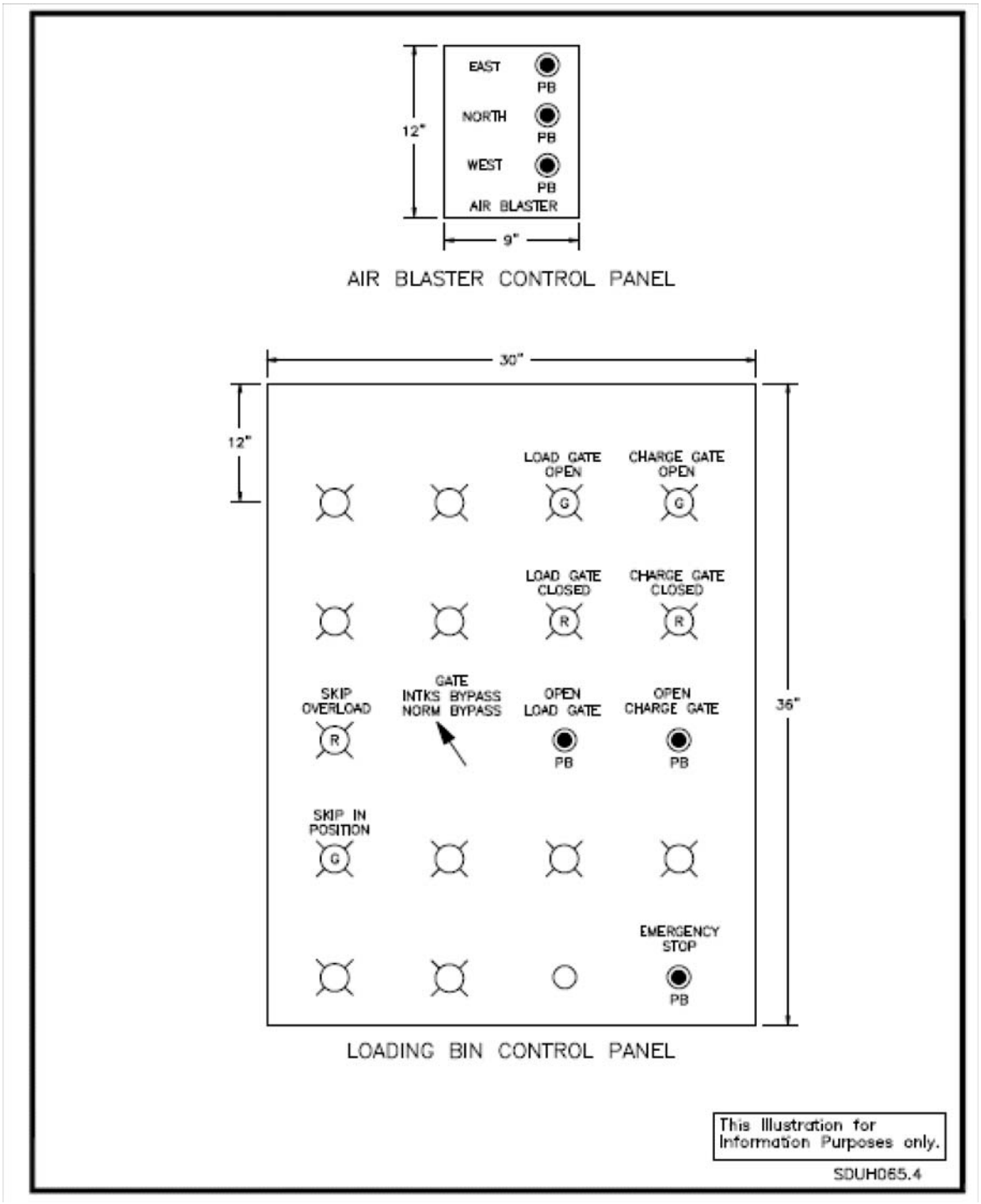

FIGURE UH II-16 Salt Loading Bin Control Panels

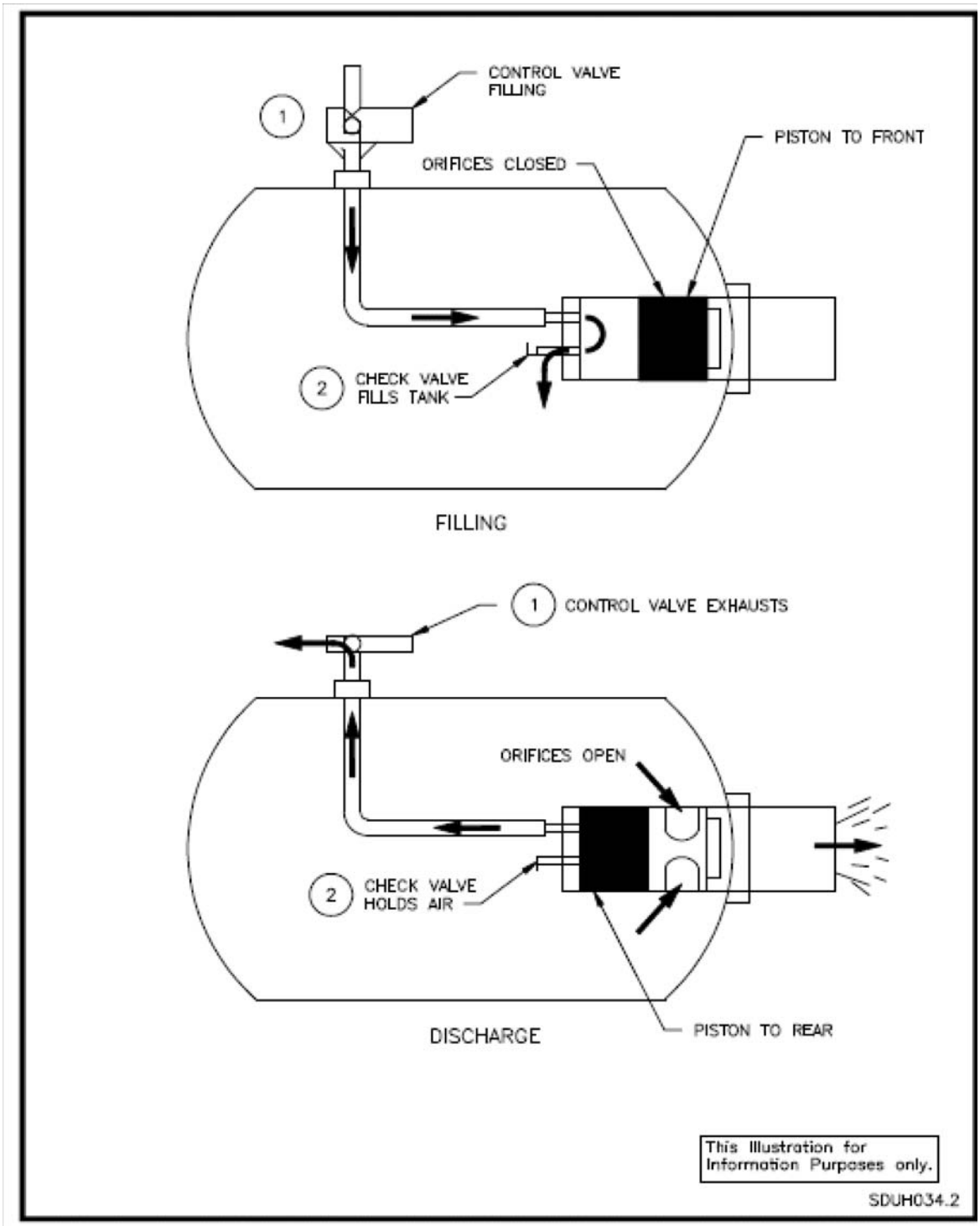

FIGURE UH II-17 Salt Bin Air Blaster Operation

Working Copy

Chapter III
Table of Contents

Subsystem UH06, Waste Hoist
and
Subsystem UH07, Waste Shaft

1.0 PRIMARY FUNCTIONS III-1

1.1 UH06 Waste Hoist III-1

1.2 UH07 Waste Shaft III-1

2.0 DESIGN REQUIREMENTS III-2

2.1 General Requirements III-2

2.2 Subsystem General Requirements III-2

2.3 Operational Requirements III-10

2.4 Structural Requirements III-11

2.5 General Arrangements and Essential Features III-12

2.6 Maintenance Requirements III-12

2.7 In-Service Inspections III-12

2.8 Instrumentation and Control Requirements III-12

2.9 Interfacing System Requirements III-14

2.10 Quality Assurance Requirements III-14

2.11 Codes and Standards Requirements III-14

2.12 Reliability Assurance Requirements III-14

3.0 DESIGN DESCRIPTION III-14

3.1 Summary III-14

3.2 Detail System III-14

3.3 System Performance Characteristics III-22

Working Copy

3.4 System Arrangement III-26

3.5 Component Design Description III-26

3.6 Instrumentation and Control Information III-34

3.7 System Interfaces III-50

4.0 OPERATIONS III-51

4.1 UH06 Waste Hoist III-51

5.0 SYSTEM LIMITATIONS, SETPOINTS, AND PRECAUTION III-51

5.1 UH06 WASTE Hoist System III-51

6.0 OFF-NORMAL EVENTS AND RECOVERY III-55

6.1 UH06 Waste Hoist III-55

7.0 MAINTENANCE III-55

7.1 Maintenance Approach III-55

7.2 Corrective Maintenance III-55

Working Copy

List of Figures

Figure Page

TABLE UH III-1 Waste Hoist Instrumentation Controls & Interlocks III-43

TABLE UH III-2 Operating Limits Waste Hoist III-53

TABLE UH III-3 Control Setpoints Waste Hoist III-53

Working Copy

List of Tables

Table Page

FIGURE UH III-1 Location of Waste Hoist Control Stations III-58

FIGURE UH III-2 Waste Hoist Drive System III-59

FIGURE UH III-3 Waste Hoist Simplified Brake Hydraulics III-60

FIGURE UH III-4 Waste Shaft III-61

FIGURE UH III-5 Location of Waste Hoist Control Stations III-62

FIGURE UH III-6 Waste Hoist Control Room Arrangement III-63

FIGURE UH III-7 Waste Hoist Master Control Console III-64

FIGURE UH III-8 Waste Hoist Series Six Panel III-65

FIGURE UH III-9 Waste Hoist Annunciator Alarm Panel III-66

FIGURE UH III-10 Waste Hoist Power Supply Panels III-67

FIGURE UH III-11 Waste Hoist Local Control Panels III-68

FIGURE UH III-12 On Board Waste Hoist Control Panel III-69

FIGURE UH III-13 Waste Hoist Chairing Device Control Panel III-70

FIGURE UH III-14 Waste Hoist Friction Wheel III-71

FIGURE UH III-15 Waste Hoist Deflection Sheaves III-72

FIGURE UH III-16 Waste Hoist Friction Wheel Bearings III-73

FIGURE UH III-17 Waste Hoist Chairing Device III-74

FIGURE UH III-18 Waste Hoist Pull Bob Switch III-75

Working Copy

Chapter III
Subsystem UH06, Waste Hoist
and
Subsystem UH07, Waste Shaft

1.0 PRIMARY FUNCTIONS **[All Shafts and Hoists]**

1.1 UH06 Waste Hoist

1.1.1 This subsystem provides a large capacity hoist system that can move CH TRU waste containers and RH TRU waste canisters to and from the underground horizon for storage emplacement and retrieval.

1.1.2 This subsystem provides a dual level shaft conveyance that can transport personnel and large items of equipment and materials to the underground horizon, with payloads of up to 45 tons.

1.1.3 This subsystem provides the principal method for transporting waste handling personnel between the waste handling building and the waste handling zone of the underground horizon. It can also be used for a secondary personnel evacuation in an emergency.

1.1.4 This subsystem provides the conveyance for periodic inspections and maintenance of the shaft and shaft furnishings.

1.2 UH07 Waste Shaft

1.2.1 This subsystem provides a 19 foot minimum diameter mine shaft through which packaged radioactive waste and waste handling personnel, essential to waste handling operations, can move between the Waste Handling Building and the underground.

1.2.2 This subsystem provides a source of downflow air from the WHB to the WH station to control any possible release of radioactivity and to ventilate the waste station.

1.2.3 This subsystem provides a route for power instrumentation and communication cables.

1.2.4 This subsystem serves as an escape route during emergencies.

1.2.5 This subsystem provides an airflow passage from the auxiliary air intake tunnel. Adjustable dampers located at the inlet to the air intake tunnel protect the Waste Handling Building from excessive vacuum. The Tunnel and Dampers are part of VU00.

Working Copy

1.2.6 This subsystem provides a location to mount instrumentation for measuring hydrostatic pressures behind the lining, salt pressure behind the key and radial convergence of the shaft.

1.2.7 This sub-system provides a route for compressed air service to the underground.

2.0 DESIGN REQUIREMENTS

2.1 General Requirements **[All Shafts & Hoists, Refer to Chapter G]**

Refer to Chapter G, Section 2.1 for general requirements.

2.2 Subsystem General Requirements **[All Shafts & Hoists, Refer to Chapter G**]

2.2.1 UH06 Waste Hoist Requirements

2.2.1.1 The Waste Hoist shall lift or lower the waste carrying conveyance from or to the underground storage level, 2,160 feet below the surface. The hoist however, shall be capable of hoisting the conveyance and maximum design payload a distance of 2,670 feet below the surface. Critical design parameters for the Waste Hoist System are as follows:

- Operating Speed of Conveyance - 500 ft/min
- Acceleration Rate - 1.0 ft/sec/sec
- Creep speed (not chairing) - 2.0 ft/sec
- Guide entry speed - 4.0 ft/sec
- Deceleration rate - 1.0 ft/sec/sec
- Rest time (minimum) - 5.5 min
- Conveyance wt. (w/rope fittings) - 33 tons (max.)
- Counterweight (w/rope fittings) - 52 tons (max.)
- Design Payload (RH Waste) - 45 tons (max.)
- Maximum payloads/8 hr shift
  - normal operation
  - 7 trips - 23 tons (lowered)
  - 2 trips - 45 tons (lowered)
  - 1 trip - equipment (lowered)
  - 2 round trips - 5 tons (manload)
  - 1 round trip - empty conveyance
  - 3 round trips - men (random basis)

2.2.1.2 The Waste Hoist shall be a counterbalanced multirope friction Keope hoist that operates a single conveyance in the vertical downcast waste shaft. The hoist shall be equipped with a conveyance, counterweight, tailropes, and guide ropes. The wheel shall be sized to satisfy the following requirements.

2.2.1.2.1 A minimum wheel diameter of 100 rope diameters.

Working Copy

2.2.1.2.2 The maximum wheel tread pressure of 380 psi when handling RH waste, but only 350 psi for all other operations. These pressures are based on a 2,670 ft operating depth.

2.2.1.2.3 A maximum of 100 wheel revolutions when hoisting the conveyance from the underground level.

2.2.1.2.4 A ratio of rope lengths of less than 50 to 1, from the top of conveyance to wheel center line, compared when conveyance is at the surface and at the underground level.

2.2.1.3 The hoist wheel and the height of the tower shall be sized to maximize the life of the rope, and to permit balancing the load between ropes by machining the wheel groves to obtainable tolerances.

2.2.1.4 The size of the conveyance and counterweight, and shaft diameter shall be coordinated to assure free passage during the hoist cycle.

2.2.1.5 The shaft conveyance shall meet the following requirements.

2.2.1.5.1 The shaft conveyance shall be a steel structure constructed with a material deck and a personnel deck.

2.2.1.5.2 The shaft conveyance shall be designed to load and unload any anticipated cars that transport radioactive waste to and from the waste handling building to the underground storage area.

2.2.1.5.3 The allowable stresses for all the steel members and connections shall be limited to 25% of AISC (American Institute of Steel Construction) allowable stresses to allow for accelerations, decelerations, impact loading and fatigue.

2.2.1.5.4 The distance of the conveyance to the shaft wall or shaft installations shall be a minimum of 9 inches except in the region of the fixed guides.

2.2.1.5.5 The distance between conveyance and counterweight shall be at least 20 inches.

2.2.1.5.6 Approximately 15 feet above the platform level, a removable deck with wire mesh on four sides shall be provided. This deck has personnel doors and will be used for personnel transport.

2.2.1.5.7 The cross sectional plan dimensions of the crosshead and platform shall be 10 ft x 14 ft and 10 x 15 ft 4 inches, respectively.

Working Copy

2.2.1.5.8 The conveyance platform shall have an inside clear area 7 ft 10inches wide, with rails at 6 ft 6 inches on centers for the double flanged wheels of the special motorized cars that carry packaged radioactive waste. The assembled conveyance shall be open on both ends with a clear height of 25 feet when the personnel deck is removed.

2.2.1.5.9 A lug shall be provided in the roof of the conveyance for attaching a hook for lifting equipment into and out of the conveyance. The roof of the conveyance shall have a trap-door. A fixed ladder from the personnel deck to the roof trap-door shall be provided.

2.2.1.6 The counterweight shall meet the following requirements.

2.2.1.6.1 The counterweight shall be manually adjustable to decrease the required drive horsepower.

2.2.1.6.2 The weight of the counterweight shall be approximately equal to the weight of the empty conveyance plus one half the weight of the maximum payload. The weight of the conveyance rope fittings and of the counterweight rope fittings must be taken into consideration in these calculations.

2.2.1.6.3 When assembled the overall frame dimensions shall be approximately 1 ft thick X 6 ft wide X 52 ft 6inches long. The individual cast iron weights contained by the frame shall have lifting holes and pry slots. Each individually weight weighs approximately 1,200 lbs.

The safety catch lugs of the counterweight shall be designed to satisfy the same load combinations, operational, emergency and accident conditions as the conveyance.

2.2.1.7 The ropes shall meet the following requirements.

2.2.1.7.1 The hoist ropes shall be full locked coil design.

2.2.1.7.2 The guide ropes shall be half-lock coil construction.

2.2.1.7.3 Tail ropes shall be of the non rotating type.

2.2.1.7.4 The factor of safety for all ropes shall meet the requirements of ANSI M11.1 and MSHA 30 CFR 57.19021.

2.2.1.7.5 All ropes shall be bright.

2.2.1.7.6 For the conveyance with the maximum design payload, the factor of safety of the hoisting ropes shall be at least 5.9 as determined based on ANSI M11.1 and MSHA 30 CFR 57.19021 according to the depth of the waste shaft. Both the hoisting ropes and tailropes shall have a minimum endurance limit of 400,000 loading cycles. Each guide rope shall have tensioning

Working Copy

cheeseweights of at least 18,000 pounds. To reduce the tendency of the guide ropes to vibrate in unison, the amount of tensioning load on the guide ropes shall vary by about 10%. The guide ropes shall have a minimum factor of safety of 5.0. The effect of the Coriolis force on the waste hoist system and specifically the guide ropes, as determined by the following formula, is considered to be negligible due to the relatively slow speed.

$$F_c = 2 \frac{W}{g} V w \cos e$$

where F_c = Coriolis force (lb)
W = Total weight of conveyance and payload (156,000) lb)
V = Operating speed of conveyance (8.33 ft/sec)
w = Angular velocity of earth (7.37×10^{-5} r/sec)
e = Latitude of the WIPP Site (33°)
g = 32 ft/sec/sec

The stretch of the head ropes under acceleration and deceleration conditions shall be checked and the system shall be designed to keep rope stretch within safe operating limits.

2.2.1.8 In addition to rope guides, rigid guides of structural steel shall be used at the station and collar to steady the conveyance.

2.2.1.9 A chairing mechanism shall be provided at the underground storage level station to support the conveyance during the unloading and loading of the waste or material and thus prevent the sudden movement of the conveyance due to changes in the conveyance payload. The system shall be designed to support operation similar to the following.

2.2.1.9.1 The chairing mechanism shall consist of two movable structural members with hydraulic buffers. When a loaded conveyance is lowered and approaches the underground station at a reduced speed of 40 ft/min, it shall activate a magnetic proximity switch approximately 6 ft above the landing, which shall apply the brakes and stop the hoist. The chairs shall then automatically move into the chairing position under the conveyance. After the chairs are fully deployed, the conveyance shall be automatically lowered at the same creep speed until it contacts the buffers. The buffers absorb the shock and slow the conveyance until the conveyance comes to rest on the chairs. The hoist shall continue to operate in a downward direction to raise the counterweight and release the headrope tension until about 150 percent of the hoist motor full-load torque is reached. A this point, the current limiter shall stop the hoist motor and apply hoist brakes. When this occurs, indicating lights at the storage level control station and master control station shall signal the completion of chairing and unloading may proceed.

Working Copy

2.2.1.9.2 Upon initiation of an up-travel signal, the brakes shall be release, and the hoist shall turn slowly to lower the counterweight and restore tension in the headropes on the conveyance side. Then the hoist can be safely accelerated to raise the conveyance. When the conveyance passes the chairing proximity switch, the chairs shall be withdrawn automatically. The chairing device shall not be deployed during personnel transportation.

2.2.1.10 Catch gear shall be provided in the hoist tower to catch either the conveyance or the counterweight if the hoist ropes should break during an accidental overtravel. At its base the catch-gear shall be supported by a shock absorber that fastens to the support framing. The live load transmitted by the shock absorbers to the support members shall be limited to 2g.

2.2.1.11 Wood Arrestors and retarder beams shall be provided in the tower and sump regions of the hoist shaft to decelerate either the conveyance or counterweight in the event of and accidental overtravel. The overtravel arrestors shall have an arrestor drag which, in combination with fully applied brakes, shall produce a maximum deceleration of 30 ft/sec/sec on the ascending conveyance carrying one person. For the undertravel arrestors, the maximum deceleration may be up to 3.0 g.

The length of the arrestors shall be adequate to stop the conveyance in event of total failure of the brake system, when traveling at the operating speed of 500 ft/min and carrying the maximum design payload.

2.2.1.12 Crash beams designed to withstand the breaking load of the ropes shall be located at the top and bottom of the hoist shaft beyond the wood arrestors to protect the structure against damage that can be caused by an overtravel beyond the arrestors by either the conveyance or counterweight. The location of the arrestors shall be such that the descending counterweight or conveyance reaches the crash beam in the sump before the ascending conveyance or counterweight reaches the crash beam in the tower. The ascending conveyance shall be stopped by the crash beams before the rope attachments enter the deflection sheaves.

2.2.1.13 Retarder beams shall be provided that rest in notches at the top or bottom of the wood arrestors. They contain deceleration knives that are forced into the arrestors when an overtraveling conveyance or counterweight strikes the retarder beam.

2.2.1.14 Deflection sheaves shall be used to reduce the required diameter of the waste shaft, and the increase the bearing angle of the ropes on the main drive drum. Spacing shall allow for .5 second minimum interval of travel time before the hoist rope is subjected to reverse bending at the deflection sheaves.

2.2.1.15 Rubbing Balks shall be used to prevent the tail ropes from becoming entangled while allowing their free vertical movement.

Working Copy

2.2.1.16 A guide rope frame shall be provided to space the guide ropes. It shall be located in the waste hoist sump, above the cheese-weight tensioning stacks on the bottom end of the guide ropes. The ropes shall pass through vertical split tubes that are secured to the frame. The tubes allow the free vertical movement of the ropes.

2.2.1.17 The 13.8 kV, 3 phase, 60 Hz power for the waste hoist motor power converter transformer shall be fed from the power buses of the plant electrical system through the bus selector switches and a distribution breaker. The selector switches shall permit power to be delivered to the hoist power converter transformer from either Plant Sub bus A or B. Secondary voltage from the converter transformer to the system shall be 480 volts ± 10%, 3 phase at 60 Hz ± 3%.

2.2.1.18 The power source for the waste hoist direct drive motor shall be via silicon controlled rectifiers (SCR).

2.2.1.18.1 The power converters shall be a 3 phase, 6 pulse forward and reverse SCR assemblies. The converter shall meet all the specified duty cycles, acting both as a converters and as inverters. SCR cell failure, conduction through fault, control power undervoltage, and loss of cooling air.

2.2.1.18.2 The design of the SCR converter shall minimize the generation of harmonic currents in the AC power system.

2.2.1.18.3 The SCR converters shall be capable of operating in all four quadrants, i.e. motoring in forward and reverse and overhauling in forward and reverse, with all types of payloads.

2.2.1.19 The waste hoist power transformer shall be the ventilated dry type with four full rated KVA 2.5 percent primary voltage taps (two above and two below nominal).

2.2.1.20 The protective features for the power and control circuitry shall include at a minimum, instantaneous overcurrent, SCR cell failure, conduction through fault, control power undervoltage, surge protection and loss of cooling air.

2.2.1.21 Power sections of the SCR converter shall be force ventilated with integral ventilating fans.

2.2.1.22 Electrical equipment may be housed in NEMA 1 enclosures indoors where it is clean and dry. Other locations shall use NEMA rated enclosures suitable to their location conditions. Shaft electrical equipment shall be housed in NEMA 4X enclosures.

Working Copy

2.2.1.23 The direct drive hoist motor shall be a continuous time rated dc shunt wound motor with a 1.5 normal operating service factor, and for occasionally applied overload conditions a factor of 2.00.

The NEMA defined overload capability (frequently and occasionally applied) shall match the hoist duty cycle requirements, without exceeding the motor RMS rating and temperature rise, based on 50°C ambient temperature at an elevation of 3,500 feet above sea level.

2.2.1.24 The hoist shall be capable of being operated manually or semiautomatically. In the manual operation mode the hoist operation shall be monitored and controlled by a hoist man located at the master control station.

2.2.1.25 In the semi-automatic mode, the hoist speed reference shall be controlled by DDP. The DDP shall receive its signal from a pulse transmitter connected to the hoist shaft.

2.2.1.25.1 A selsyn position indicator shall be provided to indicate the position of the conveyance in the shaft. It shall be provided with a synchronizing unit to automatically compensate the position indicator and Lilly for rope slippage.

2.2.1.25.2 Magnetic proximity switches shall be provided in each slowdown zone to monitor conveyance position.

2.2.1.25.3 A tachometer signal shall be used to provide speed feedback for indication, motor overspeed and deceleration checking purposes.

2.2.1.26 A hoist driven Lilly controller shall be provided to initiate emergency stop on over speed or overtravel conditions.

2.2.1.27 Mechanical track limit switches shall be provided beyond the normal traveling zones which shall actuate emergency stop functions on the hoist drive.

2.2.1.28 The hoist brakes shall stop a fully loaded conveyance under all emergency stop conditions within a safe distance. The brakes shall be selected so that a 50 percent operation of the total braking system is capable of stopping the conveyance when the conveyance carries the maximum payload at the maximum hoisting depth, within a 30 foot travel distance.

2.2.1.29 During an emergency stop, when men are carried the hoist brakes shall bring the conveyance to a stop not faster than 16 ft/sec/sec, during normal operation no faster than 6 ft/sec/sec.

2.2.1.30 Four control stations shall be provided; A master control station, a control station at the collar and at the underground shaft station, and one on the conveyance. Jogging switches shall be provided in the area of the hoist drum and the deflection sheaves (see Figure UH III-5).

2.2.1.31 The controlling station for the Waste Hoist shall be selectable from the Master Control Station. Control functions shall be provided to accomplish the following:

- If the Master Control Station is selected, only the Master Control station has control of the conveyance.
- If the Tread Grooving Station is selected, only the Tread Grooving Station has control of the conveyance.
- If Level Stations and Conveyance is selected, either the Collar Level Station, the Storage Level Station, or the Conveyance has the control of the conveyance.

2.2.1.32 The electrical controls and the hoist system shall be designed to support at least three types of conveyance stopping: a normal stop, a controlled stop that involves deceleration and then brakes set, and an emergency stop with the application of brakes.

2.2.1.33 The Waste Handling Conveyance shall be equipped with a pendant controller that permits control of the conveyance for shaft inspections and construction activities.

2.2.1.34 The Master Control Station shall be located in the Hoist Control Room and contain all the necessary equipment to operate and monitor the Waste Hoist under all of the operating conditions.

2.2.1.35 Instrumentation shall be provided to monitor and control the heating and ventilating system necessary to maintain the temperature and humidity for all the controls requiring temperature and humidity control.

2.2.1.36 The design of the equipment shall permit total or partial disassembly for "mothballing" purposes.

2.2.1.37 An overhead support crane shall be provided to aid in the servicing of the Waste Hoist. It shall be pendant controlled and have a minimum of ten-ton capacity.

2.2.2 UH07 Waste Shaft Requirements

2.2.2.1 The shaft diameter shall have a nominal diameter (19 feet) large enough to accommodate the Waste Handling Conveyance. The portion of the shaft in the salt formation shall be a larger diameter (23 feet) than nominal to allow for creep deformation of the salt. The upper portion of the shaft shall be larger to accommodate waste hoist system equipment.

2.2.2.2 The shaft lining extends from the shaft collar in the Waste Handling Building to the top of the shaft key at the rock and salt interface. The key extends a

minimum of 56 feet below the rock and salt interface into sound, competent salt. Through the remainder of the shaft, rock bolts and wire mesh may be required if stability problems are encountered.

2.2.2.3 The bottom of the shaft shall extend below the storage level to a depth required by the hoisting equipment and sump.

2.2.2.4 The components of the shaft lining consist of the unreinforced concrete shaft lining and the reinforced concrete shaft key.

2.2.2.5 At least two water collector rings shall be provided; one located below each of the major water tables. Water from between these rings shall be piped to the shaft station.

2.2.2.6 All construction and non-construction materials within the shaft shall not support combustion.

2.2.2.7 The collar of the Waste Shaft is supported by rock and shall be designed for all vertical and lateral loads. The collar is the foundation for the hoist tower and the foundation slab and walls of the hot cell of the Waste Handling Building.

2.2.2.8 The shaft shall provide space for at least a 2" water supply and drain line, a 4" compressed air line, 480 V and 13.8 kV electrical power cables, telephone cables, and instrumentation cables, including hoist control and CMR signal cables.

2.3 Operational Requirements [**All Shafts & Hoists, Refer to Chapter G**)]

2.3.1 UH06 Waste Hoist

2.3.1.1 Failure of the waste hoist braking system could result in a drop and subsequent breach of waste containers. A preoperational check of the condition and performance of the waste hoist braking system shall be performed. The pre-operational checks required per Section 2.7 are adequate to ensure the system is acceptable for use.

Prior to use, the waste hoist is verified to have the brakes and hoist motor in-service. **[TSR SAC 5.1.1.1]**

The waste hoist components including brakes, motor, and ropes must be inspected on a regular basis to ensure the waste hoist integrity and its capability of performing its design function. **[DSA SAC 4.5.5]**

2.3.1.2 Hand-held radios are not to be used inside the Master Control Station as they can interfere with the proper operation of the hoist electronics.

2.4 Structural Requirements **[All Shafts & Hoists, Refer to Chapter G]**

2.4.1 UH06 Waste Hoist Structural Requirements

2.4.1.1 The conveyance shall be designed for the vertical load combination of deadload, maximum payload, and forces transmitted from the hoisting ropes and tailropes during the normal operation. The allowable stress for all the steel members and connections shall be limited to 25% of AISC allowable stresses to allow for accelerations, decelerations, impact loading and fatigue.

2.4.1.2 The conveyance shall be fabricated of A-36 structural steel in accordance with AISC MO11.

2.4.1.3 The conveyance shall be designed for horizontal loads resulting from loading and unloading of the payload, and the interaction between the conveyance and rigid guides during normal operation. The magnitude of the maximum horizontal loads imposed on the conveyance is estimated to be equivalent to a force accelerating the conveyance and payload at a rate of 0.25 g from the fixed guides during travel and 10% of the payload during loading and unloading.

2.4.1.4 In the event of emergency stops or the over traveling conveyance engaging the arrestors, all members and connections may be stressed up to full AISC allowable stresses.

2.4.1.5 In the unlikely event of the over traveling conveyance crashing into the crash beams, which might result in breaking of the head ropes, local yielding or buckling in the conveyance is acceptable. However, the safety catch lugs and their support members on the conveyance must remain undistorted and operable after an ascending crash. These lugs and supports shall be capable of holding a conveyance drop equivalent to 2.0 g, distributed to two lugs and two support members only.

2.4.1.6 The safety catch lugs of the counterweight shall be designed to satisfy the same load combinations, operational, emergency and accident conditions as the conveyance.

2.4.1.7 The rigid guides installed to steady the conveyance shall be designed for a horizontal force from the conveyance or counterweight equivalent to .25 g. The total horizontal forces from the conveyance or counterweight shall be distributed equally by top and bottom guide shoes only.

In both the north-south and east-west directions, only two fixed guide rails shall be assumed to be engaged at a time.

2.4.1.8 Crash beams in the hoist tower shall be designed to withstand the breaking load of the ropes transmitted through the conveyance to the beams during an overtravel accident.

2.5 General Arrangements and Essential Features **[All Shafts & Hoists, Refer to Chapter G**]

2.6 Maintenance Requirements [**All Shaft & Hoists**]

2.7 In-Service Inspections [**All Shafts & Hoists, Refer to Chapter G**]

2.8 Instrumentation and Control Requirements [**All Shafts & Hoists, Refer to Chapter G**]

2.8.1 UH06 Waste Hoist

2.8.1.1 There shall be four control stations and two jogging stations for the waste hoist. The master control station shall be located in the hoist control room. One local control station shall be located at the waste shaft collar, and another local control station at the underground shaft station. Furthermore, the control of the hoist shall also be provided in the conveyance through an FM transmitter. The jogging stations are located near the hoist drum and the deflection sheaves. When transporting waste pallets the semiautomatic operation will normally be used. When handling the waste casks, control shall be in manual mode. The master control station shall be able to operate the hoist manually. Upon transfer of command from the master control station, the local control stations shall only operate the hoist in semiautomatic operation.

2.8.1.2 FM radio contact can be maintained from the conveyance to the master control station. Also, the pull cord system is accessible from the conveyance for signaling when the conveyance is at rest.

2.8.1.3 Major control and monitoring functions of the master control station shall consist of the following:

2.8.1.3.1 Manual operation of hoist speed from a stepless master joy stick that controls direction, speed and automatically controls the activation and deactivation of the brake.

2.8.1.3.2 A manual brake control joy stick.

2.8.1.3.3 A hoist mode selector switch for selecting Manual, Semi-Automatic, Tread Grooving, Shaft Inspection, and Test modes.

2.8.1.3.4 A control location switch to Activate/De-activate the local control stations.

2.8.1.3.5 An emergency stop pushbutton switch.

Working Copy

2.8.1.3.6 A controlled stop pushbutton switch.

2.8.1.3.7 A Transport Selector switch with a Material and Personnel Position.

2.8.1.3.8 A key controlled overtravel backout switch to permit testing the overtravel limit switches.

2.8.1.3.9 A key controlled Light/Heavy switch for selecting different hoist operation for loads above ten tons.

2.8.1.3.10 A key controlled Normal/Defeat switch to permit faster speed operation during testing operations.

2.8.1.3.11 Push button switches to move the pivot rails up or down at either the Collar or Storage Level position. (These switches do not function unless the station control switch is placed in the remote position).

2.8.1.3.12 Push button switches to stow or deploy the Chair.

2.8.1.3.13 Push button switches to start the East and West hydraulic pumps.

2.8.1.3.14 A push button switch to start the motor blower.

2.8.1.3.15 Three push button switches to test and reset the emergency braking system solenoid valves.

2.8.1.3.16 A lighted display (MEN ARE WORKING IN THE SHAFT).

2.8.1.3.17 Alarms and Indications to permit the operator to access normal and abnormal conditions of the hoist equipment.

2.8.1.3.18 A digital and analog hoist speed indicator shall be available as well as an analog hoist position indicator.

2.8.1.3.19 The indicator light bulbs can be tested by depressing the light lens.

2.8.1.4 The conveyance shall have a battery powered frequency modulated transmitter/receiver providing two-way communication between the conveyance and the hoist control room. This is in addition to a pull cord communicating system which will be installed in the shaft.

2.8.1.5 Hoist operation will be continuously monitored by the central monitoring system (CMS).

The following conditions will be monitored:

2.8.1.5.1 Mode of operation (off/material/personnel).

2.8.1.5.2 Abnormal operation.

2.8.1.5.3 Emergency stop.

2.8.1.5.4 Material on conveyance.

2.8.1.5.5 Men on conveyance.

2.8.1.5.6 Direction of travel.

2.8.1.5.7 Men working in shaft.

2.8.2 UH07 Waste Shaft

The Waste shaft proper has no instrumentation or control requirements. There are geomechanical instruments located in the shaft that are used as information gathering devices. These are not directly control instruments and are referenced in the interface Section 2.9.

2.9 Interfacing System Requirements **[All Shafts & Hoists, Refer to Chapter G]**

2.10 Quality Assurance Requirements **[All Shafts & Hoists, Refer to Chapter G]**

2.11 Codes and Standards Requirements **[All Shafts & Hoists, Refer to Chapter G]**

Refer to Chapter G for codes and standards requirements.

2.12 Reliability Assurance Requirements **[All Shafts & Hoists, Refer to Chapter G]**

3.0 DESIGN DESCRIPTION

3.1 Summary **[All Shafts & Hoists, Refer to Chapter G]**

3.2 Detail System **[Description [All Shafts & Hoists, Refer to Chapter G]**

3.2.1 UH06 The Waste Hoist System Description

3.2.1.1 The Waste Hoist system exists for the main purpose of moving radioactive waste from the surface to the underground. The system can be used to remove radioactive waste from the storage area if required. It is also used to transport personnel, material and equipment. The system supports maintenance in the Waste Shaft. The equipment that is part of this system is the Waste Hoist equipment installed in the Waste Handling Building, the headframe, shaft switches, and the conveyance.

Working Copy

3.2.1.2 The Waste Hoist itself is an electric driven friction hoist. (See Figure UH III-2) There are six hoist ropes that are strung from the conveyance to the counterweight over the Hoist Wheel.

| The waste hoist is required to have six ropes any one of which can
| support the fully loaded conveyance. **[DSA SC SSC 4.3.5]**

3.2.1.2.1 The Hoist Wheel is supported on a Hoist mainframe that is in turn supported on three support points. The drive motor field and its support frame is supported in a cantilever fashion from the Hoist mainframe. The drive motor armature is bolted to and supported by the shaft of the Hoist Wheel in a cantilever fashion. The drive motor transmits torque to the Hoist Wheel shaft via a friction face coupling. The connecting coupling bolts do not transmit the torque. The complete rotating assembly is supported by two bearings.

The west bearing, between the Hoist Wheel and the motor, is a held bearing. Axial space is provided in the east bearing furthest from the motor to allow growth of the shaft with temperature changes. The design of these bearings allow them to serve as thrust bearings as well as load bearings. The bearings are lubricated by a bearing housing reservoir.

3.2.1.2.2 The hoist drive motor is fan cooled by circulating filtered building air through the motor enclosure.

3.2.1.2.3 Six deflection sheaves are provided to reduce the size of the shaft opening and to increase the contact angle of the hoist ropes with the Hoist Wheel. Five of the deflection sheaves are free to rotate relative to one another on the support shaft. The end sheave is connected to the shaft. This arrangement minimizes wear on the ropes and on the deflection sheaves. Roller bearings are provided on each end of the deflection sheave shaft. The five sheaves that rotate on the shaft have plastic sleeve bearings. These bearings are grease lubricated.

3.2.1.2.4 The weight of the counterweight minus the conveyance weight is approximately equal to half of the rated load of the hoist.

| The waste hoist is required to have a counterweight to minimize torque
| loading on the waste hoist motor and drum. **[DSA SC SSC 4.3.5]**

3.2.1.2.5 Tail ropes are provided to balance out the weight of the hoisting ropes for the various positions in the shaft of the conveyance and hoist.

Working Copy

3.2.1.2.6 The Hoist Wheel is driven directly by the shaft of the hoist DC drive motor which in turn is powered by an SCR (Silicon Controlled Rectifier) power supply.

3.2.1.2.7 There are two brakes, mounted approximately 180 degrees apart on each braking flange of the Hoist Wheel. These disc brakes (four total) are spring set, and are released by hydraulic pressure. Brake switches indicate brake set, release, and wear.

3.2.1.2.8 A redundant hydraulic power supply exists to supply hydraulic pressure to release the brakes. Each pressure unit has its own motor, pump, and oil reservoir. There is an automatic switch over from the primary system to the standby system if the hydraulic pressure decreases below the set point. There is no automatic switchover from the standby system to the primary system. A timed back up pressure relief path exists to set the brakes if for any reason the brake the pressure is not release within a few seconds after the application of the brake set signal.

Refer to Figure UH III-3 for a simplified diagram that is used in the following discussion.

Two pumps are provided to supply hydraulic pressure to operate the brakes. Only one pump operates at a time. Diverter valves positioned by the control system assure that the hydraulic fluid supplied by a pump is returned to the reservoir associated with the operating pump.

When Pump 2 operates, fluid is supplied through check valve CV-3, the Manual Dump Valve, and Flow Limiting device PR-1 to charge the accumulator to operating pressure.

Valves SV-5 and SV-6 are energized and open normally. When a brake release is called for, SV-3 and SV-4 are energized and opened applying pressure to the brakes to release them.

To reset the brakes for a controlled stop, valves SV-4 & SV-3 are repositioned to relieve the brake pressure through the ramp circuit, through check valves CV-2 & CV-1, diverter valve SV-1, Filter F2, Cooler C2 to the reservoir.

Valves SV-6 and SV-5 are repositioned to release the brake caliper pressure directly to SV-1, bypassing the ramp circuit and SV-4 & SV-3 on overtravel. This mode of releasing the pressure will set the brakes faster than a normal stop.

If the brake pressure has not dropped in a short time after a brake set signal, valves SV-2 and SV-7 will open and relieve the fluid pressure back to the reservoir via diverter valve SV-11. Valve SV-11 is positioned by the control circuitry to return the hydraulic fluid to the reservoir of the operating pump.

PS-3 is a pressure switch that closes on increasing pressure indicating that pressure is adequate for brake operation.

3.2.1.2.9 Piping exists to isolate a brake unit from the normal hydraulic system and release the brake with a portable hydraulic pump.

3.2.1.2.10 There are four guide ropes for the conveyance and two guide ropes for the counter weight. Tension in these ropes is maintained by cheese weights on the bottom of the ropes. The size of the cheese weights are different to prevent harmonic vibrations during operation of the hoist.

3.2.1.2.11 A long distance Lilly controller is driven by the Hoist Wheel shaft through gearing to permit the Lilly to convert revolutions to conveyance position. Since slip occurs between the hoist ropes and the hoist wheel, a differential gear box is incorporated in the drive chain to permit "rezeroing" the Lilly.

A pneumatic shift system controlled by electric solenoid is on the Lilly to adjust the Lilly travel limits depending on which deck of the conveyance is being used. This pneumatic shift system is the only compressed air requirement for the hoist system. The compressed air is obtained from the controlled air system in the Waste Handling Building.

Through appropriate gearing the main cam wheel of the Lilly makes slightly less than one revolution for full travel of the hoist. Wheels with cams activate arms at various positions of the conveyance and these arms operate switches to assure that the conveyance is at the appropriate speed for various positions in the shaft. Two weight type Governors mounted on the Lilly monitor the speed of the conveyance. Switches off this speed governor are used to indicate that a "Loss of Lilly" condition has occurred, and to assure that the speed of the conveyance is appropriate for various positions in the shaft.

3.2.1.2.12 Speed is measured by a digital pulse encoder and frequency-to-voltage converter driven from the hoist brake ring by a friction wheel. Electronic position indication is provided by a selsyn generator driven by the Lilly gearing. This Selsyn position indicating system is updated by "rezeroing" at known proximity switch locations.

Working Copy

3.2.1.2.13 A conveyance and counterweight overtravel arrestor system exists to stop them if the normal control system has failed. If the conveyance exceeds its allowable travel in the up direction it will engage a retarder beam that is equipped with knives. These knives cut through installed timbers to absorb the energy of the upward moving conveyance. After the timbers the conveyance will engage a crash beam to stop the conveyance.

Safety lugs on the conveyance mate with pivoting dogs on the headframe to prevent the conveyance from falling if the ropes break. Hydraulic shock absorbers exist to reduce the impact on the pivoting dogs, safety lugs and headframe, if the pivoting dogs are engaged by a decending conveyance. The counterweight overtravel system functions in a similar fashion to stop the counterweight in the upward direction.

Lever arms exist to raise the pivoting dogs if they are not supporting any weight. On the bottom of the shaft is a similar system to stop the conveyance or the counterweight in the downward direction. The arresting system on the shaft bottom only contains the knives and timbers.

3.2.1.2.14 In an emergency the conveyance or the counterweight (depending on which is heavier) can be lowered using a dynamic braking system.

3.2.1.2.15 There is one SCR power supply to power the hoist.

3.2.1.2.16 The Master Control Station (MCS) in the hoist control room has selector switches for the assignment of master or local control of the conveyance. Control is possible from the Collar, the Station, the Conveyance, and the Tread Grooving stations. The Tread grooving stations can only "jog" the conveyance.

The local control stations are operable only when control is released from the MCS. The station controls are interlocked so that command control is possible from only one control station at any time, and further, only from the shaft or collar station at which the conveyance is located at the time. The local control stations are capable of operating the hoist in the JOG and the SEMI-AUTOMATIC modes only; where each hoisting or lowering cycle is initiated by a pushbutton. Manual control is possible only from the MCS.

The conveyance control is only operable from the Collar or Station unless the Hoist Mode Selector switch is in the "Shaft Inspection" mode. In the shaft inspection mode the conveyance control can jog the conveyance up or down from anywhere in the shaft.

The conveyance can be controlled by pushbuttons on a pendant as well as from the pushbuttons on the local control station on the mandeck.

Working Copy

There are four preprogrammed trips that can be made by the conveyance in the semi-automatic mode. "Collar to Station, Man Deck", "Collar to Station, Material Deck", "Station to Collar, Man Deck", and "Station to Collar, Material Deck.

3.2.1.2.17 The conveyance operates in two different speed distance profiles, (Material or Personnel Mode) both in the manual or semi-automatic mode. The available speed selections are Normal, and Shaft Inspection. Normal speed is the fastest 500 FPM nominal, and shaft inspection speed is the slowest, 120 FPM nominal.

3.2.1.2.18 "Guide Entry" speed is slower than normal, 120 FPM nominal. The conveyance is decelerated to this speed by the control system when it approaches either the collar or the station.

The "jog speed" and the "tread grooving speed" are both slower than the shaft inspection speed. In the manual mode, the operator at the MCS can control the speed from zero to any value up to the maximum normal speed. The point where the hoist slows down and stops is further modified by the two different profiles available; "Material", and "Personnel".

Trips may be made in either the Manual or Semi-Auto mode. In the Semi-Auto mode the control circuitry will stop the conveyance at the proper location for the conveyance deck selected.

Cylindrical guides, two on each side of the conveyance, top and bottom for a total of eight are attached to the conveyance and slide on the rope guides to keep the conveyance centered.

3.2.1.2.19 Other hoist controls exist to test and operate the hoist system, some of which are described below.

Overtravel backout controls exist to permit testing the Lilly overtravel limit switches, the track limits and then allow the conveyance to be moved back into the normal operating range.

If the digital distance programmer fails, the top speed is limited to 100 FPM until the programmer is re-synchronized. This limitation can be defeated by a key switch on the panel to permit operation in the manual mode.

Emergency stop buttons are provided at the MCS and all the control stations to effect an emergency stop of the hoist. These buttons are operable in all modes of hoist operation. These buttons will open the control power loop and set the hoist brakes. These buttons provide the most rapid means of bringing the hoist to a stop.

A controlled stop button that will decelerate the conveyance before setting the brakes is located on the "Series Six" panel, to the left of the MCS. This is a slower and softer stopping action than the emergency stop.

A "Tread Grooving" position of the Hoist Mode Selector switch exists that permits transfer of the conveyance control to Tread Grooving stations on the waste hoist tower 4th and 5th floor level.

A jammed conveyance and tread wear detector exists that senses whether the ropes and the Hoist drum are moving at the same speed. If either the conveyance or the counterweight becomes jammed the slip of the ropes on the drums will become excessive and the control system will stop the hoist. The tread wear detector senses the amount of wear of the tread groove and will stop the hoist if the wear is excessive.

A tail rope tangle switch exists that senses that the tail ropes are not operating freely. This is accomplished by a trip line through the loop of the tail ropes. Any tangle will cause the rising tail rope to engage the trip line, which will cause a signal from a proximity switch to shut down the hoist.

A trip recorder exists to indicate whenever the hoist is energized. The recorder measures hoist motor amperes, and does not indicate the direction of the hoist.

The hoist control equipment is sensitive to temperature. Instruments exist to monitor the temperature, and equipment exists to maintain the temperature of the control equipment.

A "Heavy/Light" feature is provided so that with heavy loads the operator can select the operating mode that gives torque proving current in the direction required to hold or drive the conveyance, depending on whether it is heavier or lighter than the counterweight.

Working Copy

A conveyance material car permissive feature is provided which requires that when a car is present on the conveyance, the car be in proper position and pinned. If these criteria are not met, the hoist will not operate, and if the hoist is in motion an emergency stop will be initiated. Indicator lights provide the operator with information about the position and security of the car, and a keyed switch provides a means to bypass the interlocks in order to return the conveyance to a station.

3.2.1.3 Twelve signals, two analog and ten contact, from the Waste Hoist Operation are transmitted to the CMR for remote monitoring. The analog signals are the hoist motor volts and amps. The contact signals are "Hoist Operation, Manual", "Hoist Operation, Semi-Auto", "Hoist, Abnormal Condition", "Emergency Stop", "Men Working fin Shaft", "Waste on Hoist", "Personnel on Hoist", "Hoist, Up", and "Hoist, Down".

3.2.1.4 The Waste Hoist Signaling System consists of bells and lights activated by the operators at the MCS and the operating stations.

3.2.1.5 A bridge crane exists above the drive motor and hoist to support maintenance activities.

3.2.1.6 The Hoist motor is enclosed with a steel and fiber glass housing. Forced air is supplied to the housing to provide cooling air to the motor.

3.2.2 UH07 The Waste Hoist Shaft System Description

3.2.2.1 The Waste Hoist Shaft System extends from the surface to the underground facility for the main purpose of providing a path for the movement of personnel and material. The shaft also provides a path for some of the mine ventilation input air. The equipment that is included as part of this system is the Shaft itself, the personnel safety gates at the collar and the storage level, the signal pull bob system, the fixed guides, the pivot rails, the guide ropes and their support and tensioning system, the retarders, crash beams, catch gear, the chairing device and the conveyance control cables in the shaft. (See Figure UH III-4)

3.2.2.2 The shaft extends from the surface to below the storage level. The sump below the storage level is needed to accommodate the tail rope loop, weights for the guide ropes, and crash beams and retarder equipment for the conveyance and the counterweight.

3.2.2.3 Three water rings are installed in the shaft liner for collection of the shaft water seepage.

3.2.2.4 Fencing and gates exist at the collar and station levels of the shaft to prevent inadvertent access to the shaft. Control circuitry prevents movement of the conveyance with these gates open.

3.2.2.5 A bell cord is installed the full length of the shaft to permit signaling using the bell system from any level in the shaft.

3.2.2.6 Control cables to support the operation of the hoist and signal system are supported by "Kellam" grips as required throughout the shaft.

3.2.2.7 A "chairing" device is part of the Waste hoist system. This device provides support for the conveyance at the storage level while heavy loads are being loaded or unloaded.

3.2.2.7.1 The "chair" is needed to prevent the conveyance from moving up or down because of rope stretch when heavy loads are removed or added to the conveyance. The chair is retracted to a stowed position when the conveyance is not carrying heavy loads. Interlocks are provided assure that the chair cannot be deployed nor stowed while the conveyance is in the "chairing" position.

3.2.2.7.2 The chair can be stowed or deployed from the MCS or the Station.

3.2.2.7.3 The support portion of the chairing device are two beams that are underslung and supported on wheels by two other beams. The supporting beams are moved into position by two hydraulic pistons on each beam. The supporting beams have hydraulic buffers that cushion the conveyance when it comes in contact with the support beams. The force to move the chairing beams is derived from individual hydraulic systems that consists of a pump, a reservoir, an accumulator, and control valves. The pump only operates when the support beams are being stowed or deployed or when maintaining system pressure.

3.2.2.8 There is an air flow passage, (Air Intake Tunnel) that connects to a relief damper system. The relief damper system function is to prevent excessive vacuum from occurring in the waste handling tower and is part of system VU00.

3.3 System Performance Characteristics **[All Shafts & Hoists, Refer to Chapter G]**

3.3.1 UH06 Waste Shaft Hoist

3.3.1.1 The Master Control Station (MCS) in the hoist control room has selector switches for the assignment of master or local control of the conveyance or a mode for tread grooving. The local control stations are operable only when

control is released from the MCS. The controls are interlocked so that control is possible from only one control station at any time. Local control is possible at the collar, station and in the conveyance. A description of the operating modes, Manual and Semi-Automatic is provided below. The Waste Shaft Hoist System is not LCO equipment.

3.3.1.1.1 Manual, by means of a stepless master controller and an operator at the MCS. When on Manual control the maximum speed at any point in the hoisting cycle is determined by the speed-distance envelope established by process control. The process controller is backed up by a mechanical speed and position sensor called a "Lilly" Controller (Model C). The maximum man/materials speed of this hoist is 500 fpm (feet per minute). Manual control is possible in the following modes:

Manual/Material: Where the lower deck of the conveyance travels from the collar to storage level. When lowering the conveyance, the operator may stop the hoist when a light at the control station (chair deploy light) indicates that the bottom of the conveyance is approximately 6 feet above the station landing.

This chair deploy light is controlled by a magnetic proximity switch. The operator will then cause the chairs to deploy and another light indicates when the chairs are fully extended. The conveyance can then be driven onto the chairs by the operator. When the motor current has built up to approximately 150% and the "Conveyance at Underground Storage Level" light is activated by magnetic proximity switch the operator will center the control lever. Deployment of the chairs is only possible in the Materials mode and it is not possible to lower the conveyance while the chairs are being deployed. The chairs will be stowed by the hoistman when the ascending conveyance passes the proximity switch which activated the chair deploy light. In Manual/Material mode, the chairs may or may not be deployed by the hoistman.

Manual/Personnel: Where the upper deck (personnel cage) of the conveyance travels from the collar to the storage level or vice versa.

Manual/Shaft Inspection: Where the maximum conveyance speed is limited to 120 fpm (2 ft/sec). The programmer controlled speed retard zones are not operational in this mode. Careful operation is required so as not to overspeed within 25 feet of the collar and station. Shaft Inspection: Operating speed is limited to 120 fpm (2 ft/sec). A plug-in pendant permits radio communication between inspectors and the hoistman to control the conveyance in this mode.

Overtravel Test: Where the conveyance is moved at low creep speed beyond the normal limits of travel to test the operation of the Lilly overtravels, magnetic proximity switches, and for specific maintenance functions.

Working Copy

3.3.1.1.2 Semi-Automatic, where each hoisting or lowering cycle is initiated by push-buttons at the surface or storage levels or in the conveyance. Hoisting cycle cannot be initiated unless, 1) conveyance is at the level of the Local Control Station (LCS) and stopped; 2) shaft gates are closed; 3) resynchronizing sequence (can only be accomplished at the collar) is complete; and 4) pivoting transfer rails are fully raised. SemI-Automatic control is possible in the following modes:

Semi-Auto/Material: Trip is initiated by a push-button located on an LCS. When the conveyance is approximately six feet above the station landing, the descending conveyance stops automatically, and the brakes are applied.

The chairs are deployed automatically after it is electrically verified that the magnetic proximity switch has been actuated by the presence of the conveyance and the conveyance is stopped. Hoist controls are interlocked to prevent the conveyance being lowered while the chairs are being deployed. The hoist stops automatically and lowers the conveyance onto the chairs. The hoist stops automatically after lowering onto the chairs. The chairs are stowed automatically when the conveyance has passed the proximity switch approximately six feet above the sill while hoisting.

Semi-Auto/Personnel: Where the upper deck (personnel cage) of the conveyance travel from the collar to the storage level or vice versa, upon trip initiation by push-button on the LCS where the cage is located or the LCS on the conveyance.

Semi-Auto/Jog: Adjustments of the cage position can be accomplished from each LCS where the cage is located when the hoist is in semi-auto mode, the speed while jogging is limited to 25 fpm (.42 ft/sec).

3.3.1.1.3 Shaft Inspection: Operating speed is limited to 120 fpm (2ft/sec). A plug-in pendant radio permits inspectors on top of the conveyance roof to communicate with the hoistman to control the conveyance during shaft inspection.

3.3.1.1.4 Tread Grooving: This is accomplished by push-buttons at the hoist friction wheel and deflector sheave levels. The tread grooving hoist speed is limited to 4.8 fpm.

3.3.1.2 Other Operating Conditions

A mantrip and materials trip combined cannot be initiated from the station level when the hoist is in SemI-Auto mode. The hoist can be switched from

Semi-Auto operation to Manual operation when the conveyance is at the station but cannot be returned to Semi-Auto mode until the conveyance is returned to the collar. If this type of combined trip is anticipated, the hoisting cycle can be accomplished in the Manual mode.

3.3.1.3 Programmer Bypassed

This condition exists after the safety loop has been opened and until the conveyance is returned to the collar where it can be resynchronized. The hoist speed is limited to 100 fpm in this condition as the retard zones in the shaft are not operational at this time. The Programmer Bypassed Defeat mode may be utilized to allow normal operating speeds and reduce operational delays if the condition causing the open loop is clearly understood.

3.3.1.4 Emergency Stops and Controlled Stops

Push-button actuators are provided at the MCS and at all LCSs to effect an E-Stop of the hoist should it be necessary. These E-Stop push-buttons are operable in all modes of hoist operation. This function will immediately open the control power loop and set the hoist brakes, and provides the most rapid means of bringing the hoist to a stop.

The Hoist Operator at the MCS has a Controlled Stop push-button available for his use, if necessary, which is operable in all modes of hoist operation. The controlled stop provides a similar braking action to returning the manual controller to the Neutral position, when in Manual mode, whereby the deceleration is controlled by the hoist electronic deceleration ramp after which the brakes set to hold the conveyance in position and the control power loop opens. This is a slower and softer stopping action than provided by the E-Stop.

To recover from these actions, the hoist must be placed in the Manual mode and the control power reset. The Programmer Bypassed Defeat function may be used to return the cage to the collar after either a controlled stop or after an E-Stop. However the rope slippage will be greater after an E-Stop and greater care must be exercised when approaching the guides.

3.3.1.5 The maintenance support crane for the waste hoist is a 30-ton bridge crane. It is pendant controlled from the fifth floor level.

3.3.1.5.1 The hoist is capable of three speeds.

3.3.1.5.2 The bridge is capable of two speeds.

3.3.1.5.3 The trolley is capable of two speeds.

Working Copy

3.3.2 UH07 Waste Shaft

3.3.2.1 The air flow performance characteristics of the Waste Shaft are primarily related to the ventilation system. Flow rates under various flow conditions are described in VUOO.

3.4 System Arrangement **[All Shafts & Hoists, Refer to Chapter G]**

3.4.1 UH06 Waste Hoist System Arrangement

3.4.1.1 Figure UH III-5 depicts the location of the Waste Hoist Control Stations. The Master Control Station is located on the second level of the Waste Handling Building Tower.

3.4.1.2 Figure UH III-6 shows the arrangement of the equipment in the Waste Hoist Control room. The equipment in the center of the room, the Interrupter switches, the Waste Hoist AC Breaker and the Transformer are part of system ED00. They are shown here only for completeness.

3.4.1.3 The supports for the rope guides are on the fourth floor.

3.4.2 UH07 Waste Hoist Shaft System Arrangement

The Waste Hoist shaft (Figure UH III-4) varies in diameter, and in the outer wall covering as shown on the referenced figure.

3.5 Component Design Description **[All Shafts & Hoists, Refer to Chapter G]**

3.5.1 UH06 Waste Hoist Component Design Description

3.5.1.1 The hoist operators console is a vertical cabinet approximately 8 feet high, and 30 inches wide. In the center section of the cabinet are some of the indicator lights and switches used to control the hoist. (See Figure UH III-7) Some additional information on the design of the operators console follows.

3.5.1.1.1 All of the lights on the panel are the color indicated on the figure. The operation of these lights can be tested by depressing the light lens cover.

3.5.1.1.2 The meters that indicate Hoist Motor Volts, Hoist Speed, and Hoist Motor Kiloamps are center reading electrical meters. The scale is as indicated on Figure UH III-7.

Working Copy

3.5.1.1.3 The conveyance depth indicator is a two handed device with one hand traveling much faster than the other, similar to the hour and minute hand of a clock. The hoist travels approximately 33 feet for each revolution of the fast (Red) hand.

3.5.1.1.4 The Dynamic Brake Test switch SW2 is not used.

3.5.1.1.5 The Overtravel Backout switch SW3, and Radio Control Permissive Bypass switch SW11, are key switches that are spring return to the "Normal" position. All other rotary switches are snap action switches. The Load selector switch and the Programmer defeat switches are also key switches.

3.5.1.1.6 The Manual Brake control switch and the Master Switch are lever stick controls. These switches are mounted on support brackets that extend from the face of the Control console. The Master switch (Speed and Direction Control) is spring return to the neutral or center position. The Brake control switch is a snap action switch that enables brake release in the release position.

3.5.1.1.7 There is a push to talk foot switch mounted in the Control Console that permits the operator to talk to the conveyance using a microphone that is suspended down from the top of the console.

3.5.1.2 The Series Six console is a vertical cabinet approximately 8 feet high, and 40 inches wide. This cabinet contains the majority of the electronics used to control the operation of the Waste Hoist. In the center section of the cabinet are some of the indicator lights and switches used to control the hoist. (See Figure UH III-8) Some additional information on the Series Six console follows.

3.5.1.2.1 All of the lights on the panel are the color indicated on the figure. The operation of these lights can be tested by depressing the light lens cover.

3.5.1.2.2 Two rows of switches and lights associated with the mine ventilation fans are installed on the Series Six Panel (not shown on Figure UH III-8) but are not used.

3.5.1.2.3 The Mine Evacuation Alarm switch is a spring return to neutral selector switch. All other selector switches are snap action switches.

3.5.1.3 The Annunciator Panel is a vertical cabinet approximately 8 feet high, and 30 inches wide. This cabinet contains the Annunciator Alarm panel, three push button switches associated with the annunciator alarm panel, the hoist motor field current indication, and the trip indicator strip chart. The mine telephone is mounted on this panel for communication with the collar and the station. See Figure UH III-9 for a layout of the Annunciator Alarm Panel and its push buttons.

Working Copy

3.5.1.3.1 Each of the annunciator indications contain two bulbs. All of the indications are yellow except for the indications that have a "W" in the upper right corner. The operation of these lights can be tested by depressing the "Lamp Test" push button under the panel lights.

3.5.1.3.2 The Hoist Motor field indication meter is an electrical meter that has a 0 -100 ampere scale. It is mounted below the Annunciator Alarm panel push buttons.

3.5.1.3.3 The Trip indicator strip chart is a 4 inch strip, single channel strip chart. It measures armature current to the hoist motor.

3.5.1.4 The M Contactor Panel is a cabinet approximately 8 feet high, and 30 inches wide. This cabinet contains contactor that supplies armature power to the hoist motor.

3.5.1.5 Behind and to the right of the Master Control Station is a stand alone panel with five panels fronts used to deliver the power to the Waste Hoist. The approximate size of the panel fronts and the components mounted on them are shown on Figure UH III-10.

3.5.1.6 There are five types of local control panels. (Figures U III-11 and UH III-12.

3.5.1.6.1 There is a Conveyance Local Control panel installed at the collar and the station. Each of them contain indicating lights and push buttons to enable the local control stations to operate the conveyance. The push buttons are spring return switches. The emergency stop switches must be turned to unlock after being pushed.

3.5.1.6.2 There are three Pivot Rail Control Panels, two at the collar level and one at the station. The selector switches are snap action 3 position switches.

3.5.1.6.3 There are two Tread Grooving Control Panels. The push button switches are spring return switches. The emergency stop switch must be turned to unlock once it has been pushed.

3.5.1.6.4 The On Board Waste Hoist Control Panel, Figure UH III-12, contains equipment to control the hoist and to communicate with the hoistman. The communication equipment is described in CM00 SDD. The equipment is shown as part of this figure for completeness. The On/Off selector switch is a snap action two position switch.

The push button switches are spring return switches except for the E-stop switch which must be rotated to unlock it after being pushed.

Working Copy

3.5.1.6.5 The chairing control panel, Figure UH III-13, is located at the station. The selector switches are snap action, two position switches. The push button switches are spring return switches. The indicating lights are the color indicated on Figure UH III-13.

3.5.1.7 The hoist motor is a 600 HP DC machine, designed for a maximum operating speed of 13.5 RPM. The field is formed by wound poles and is supplied with a constant DC current obtained from rectifying a 480 volt three phase supply. The armature consists of interpoles and multiple coils, wound on a core and connected to a commutator similar to many DC machines. The DC voltage magnitude and direction controls the speed and direction of the hoist. Nominal field current is 98 amperes. Armature current varies depending on the load. An empty conveyance requires approximately 700 amperes to hold the counterweight. As load on the conveyance is increased the armature current decreases until the conveyance becomes heavier than the counter-weight. Current then increases in the opposite direction to hold the conveyance. The hoist drive motor is approximately 9 feet in diameter, contains 12 main poles, and 12 interpoles. It is equipped with 72 brushes.

3.5.1.8 The Hoist Wheel is shown on Figure UH III-14. The dimensions shown are approximate to provide a feel for the size of the wheel. The grooves for the conveyance ropes are on 10 inch centers. The friction surface of the wheel is fabricated from plastic. The plastic rings are held in place with wood spacers. The coupling half that is used to connect the drive motor to the Hoist Wheel is installed with an interference fit without keying. The armature drives the Hoist Wheel shaft via a friction surface. The armature connecting bolts do not transfer the torque.

3.5.1.9 The Waste Hoist Deflection Sheaves are shown on Figure UH III-15. The dimensions shown are approximate. Only the first sheave is keyed to the shaft. The other five sheaves are free to rotate relative to the shaft. Bearings are provided on each end of the shaft that are lubricated with grease. The five sheaves that rotate relative to the shaft are provided with plastic bushing bearings and also use grease lubrication.

3.5.1.10 The Lilly controller is a mechanical device that monitors the speed and position of the Waste Hoist conveyance. Some of the key features are listed below.

3.5.1.10.1 The Lilly is driven by gearing connected to the hoist friction wheel shaft on the end opposite the drive motor. The Lilly is a long distance Lilly so the dials only turn near the end of travel.

Working Copy

3.5.1.10.2 Retard cams mounted on the cam wheel provide automatic stops at the station locations of the hoist if the speed has not been reduced. Cams on the cam wheel also provide track limits at the extremes of travel of the cage.

3.5.1.10.3 A mechanical governor mounted on the Lilly senses speed of the hoist and provides overspeed protection.

3.5.1.10.4 A mechanical differential transmission and a drive motor exists in the drive train to permit resynchronizing of the Lilly. A selsyn motor also exists in the drive train to provide position indication information to the operator from the Lilly.

3.5.1.11 The Friction Wheel Bearings are shown on Figure UH III-16. The bearings are spherical roller bearings to provide both vertical bearing support and axial thrust. The approximate overall dimensions of the bearing housing is shown on Figure UH III-16.

3.5.1.12 The major components of the hydraulic brake system of the Waste Hoist are the Hydraulic Pumps, Accumulator, and the disc brakes.

3.5.1.12.1 The Hydraulic pumps are "Variable Delivery Pumps". They are positive displacement pumps that contain seven pistons mounted in a circular pattern. The stroke of each piston is controlled by the position of a swash plate that is mounted on the shaft of the pump. If the swash plate is perpendicular to the shaft, the piston stroke is zero, and the output of the pump is zero. As the angle of the swash plate is increased, the stroke of the pistons increases, and the flow from the pump increases. The variable feature is not used in the WIPP method of operation.

3.5.1.12.2 The Accumulator is a steel container that has a nitrogen filled bladder inside. As fluid is pumped into the container the bladder compresses and provides a cushion to dampen out pressure variations. It also provides a source of pressurized fluid when the brakes are operated.

3.5.1.12.3 The brake calipers are mounted to provide a braking surface on both sides of the Friction Wheel brake discs. The brake material is held against the wheel disc by a series of cupped washer springs. The brakes are released by applying hydraulic pressure to a piston that compresses the springs which in turn moves the brake pads away from the brake disc. The brake pads return to the Set position when the hydraulic pressure is released from the piston. The springs set the brakes.

Working Copy

3.5.1.13 The conveyance has an overall plan floor area of approximately 11 X 15 feet. It is approximately 30 feet high. There is a personnel deck approximately 15 feet above the conveyance floor. The personnel deck is enclosed with expanded metal fencing with mandoors provided for access. The man deck can be removed to permit transporting tall loads. The roof of the conveyance has an access door which is accessible from the personnel deck by means of a fixed ladder. Guide shoes are provided for the conveyance guides. The shoes ride on rigid guides at the terminal landings, which will restrict the lateral motion of the conveyance. The total weight of the conveyance with fittings and attachments is approximately 68,000 pounds.

3.5.1.14 The counterweight has an overall plan space of approximately 2 X 7 feet. It is approximately 50 feet high. It consists of three sections with joints that bolt together. The compartment of each frame will accept removable cast iron weights. Each weight is approximately 1,200 pounds. The weights lock in place by guides on both ends. Replaceable rope guide sleeves are provided at the top and bottom of the counterweight to guide the counterweight during mid-shaft. Replaceable guide wear shoes ride on rigid guides at the top and bottom of the shaft to restrict lateral motion of the counterweight when in the end of travel. The total weight of the counterweight with fittings and attachments is approximately 102,000 pounds.

3.5.1.15 Catchgear units are provided for the conveyance and the counterweight to retain either of them if the hoist ropes break on an accidental overtravel.

3.5.1.15.1 The conveyance catchgear system is comprised of four units - one located near each corner of the conveyance. The counterweight catchgear system is comprised of two units - one located on each side of the counterweight.

3.5.1.15.2 The catchgear units consist of a vertical steel framework with a series of six gravity loaded teeth that protrude from the framework.

As the conveyance or counterweight catchgear lugs pass by the catchgear teeth, they are pushed up and back into the framework and return to a catching position as soon as the lugs pass the teeth.

3.5.1.15.3 Each catchgear frame is mounted on a heavy-duty, variable-orifice, hydraulic shock absorber and springs which will resist the eccentric loading and twisting caused by the maximum loads of the conveyance or counterweight.

3.5.1.15.4 In the event of a hoist overwind condition that would engage the catchgear, the conveyance or counterweight must be raised off the catchgear lugs and the lugs released through the use of the manual release levers.

Working Copy

3.5.1.16 Four timbers are provided at the tower and the sump regions for both the conveyance and the counterweight to assist in absorbing energy to stop an over traveling conveyance or counterweight. Retarding frames rest in notches either at the top of the wood arresters, Sump Area, or at the bottom of the wood arresters, Tower area. The Retarding frames have knives that cut into the timbers if driven by the conveyance or the counterweight.

3.5.1.17 Hoisting, Tail and Guide Ropes are provided for the safe operation of the conveyance and the counterweight.

3.5.1.17.1 The hoisting ropes are 1-3/8" diameter, full locked coil bright steel ropes suitable for use with a friction hoist.

3.5.1.17.2 The tail ropes are 2-1/4" diameter, 34 x 17, nonrotating bright steel with a synthetic fiber core. The three tail ropes of right-hand regular lay approximately balance the weight of the six hoisting ropes.

3.5.1.17.3 The guide ropes are 1-3/4" diameter, half-lock bright steel with internal and external lubrication and are designed to operate with minimal field lubrication only.

3.5.1.17.4 A trip wire that supports a large magnet is threaded through the loops of the tail ropes. A magnetic switch mounted on a support near the magnet senses the magnetic field. Any maloperation of the tail ropes will cause the magnet to move and initiate a control signal to stop the hoist.

3.5.1.18 Jammed Conveyance and Tread Wear Detectors

3.5.1.18.1 The jammed conveyance detector is a spring loaded pick up wheel driven by the hoist deflector sheave. The wheel is mounted to a pulse encoder, whose signal is processed by a frequency-to-voltage converter to indicate rope speed to the control system. If the difference between speed feedback and rope speed becomes to great, a control signal is generated which indicates jammed conveyance.

3.5.1.18.2 The tread wear detector is a sprint loaded pulley driven by one of the ropes of the hoist. If the groove in the friction wheel wears, the spring loaded pulley extends to maintain contact with the rope. When this extension becomes excessive a control signal is initiated indicating excessive groove wear.

3.5.1.19 The chairing device consists of two underhung rolling beam structures that are supported from runway beams at the Underground Waste Shaft Station. See Figure UH III-17.

3.5.1.19.1 In the figure the near runway beam is not shown so that greater detail of the rolling beam structures can be seen.

Working Copy

3.5.1.19.2 The 4 hydraulic buffers that control the deceleration of the waste conveyance have a 14 inch working stroke. The buffer body is approximately 7.5 inches in diameter. The overall length of the unit is approximately 5.5 feet. Each buffer has a maximum shock force rating of 80,000 pounds.

3.5.1.19.3 The four hydraulic cylinders (two per rolling beam) are suitable for operation with water glycol hydraulic fluid. They are approximately 36 inches long, 2.5 inches in diameter and have a 24 inch stroke. Each of the cylinders have a slide operated limit switch mounted on its body to provide position information to the control system.

3.5.1.19.4 The two hydraulic power units are driven by 3 HP, 1,200 RPM, 230/460 volt, 3 phase, 60 Hz motors. The vane pumps are capable of supplying 1.5 GPM at 1,200 Psi.

3.5.1.20 The 30-ton bridge crane used to support maintenance on the hoist is supported on rails. The distance from rail to rail is approximately 40 feet. The crane hook can reach any thing within a rectangular pattern approximately 29 feet wide by 41 feet long. The pattern extends from the outboard disk of the friction hoist to approximately half way across the hatch opening and is roughly centered on the friction wheel and motor assembly.

3.5.1.20.1 The crane is powered by 440 volt, 3 phase power.

3.5.1.20.2 Normal controls for a pendant operated crane exist such as limit switches at each end of the bridge travel, trolley travel, and hook travel.

3.5.2 UH07 Waste Hoist Shaft Component Design Description

3.5.2.1 The shaft is lined with unreinforced concrete to the bedded salt interface, approximately 837 feet below the surface. The thickness of the liner varies from 10 inches at the collar to 20 inches at the key. At the liner bottom a reinforced concrete key exists, which extends into the shaft wall. Below the key from the salt/rock interface downward the shaft is covered with bolted mesh to control surface scaling.

The internal dimensions of the shaft at the various levels and other key dimensions can be determined from Figure UH III-4.

3.5.2.2 The concrete key is a reinforced concrete cylinder approximately 38 feet high with and internal diameter of 19 feet. The Key wall thickness is nominally 3 feet. The large section on the bottom of the key is nominally 6 feet thick. The concrete key has 8, 2 inch drain lines installed about half way up the key to drain water from behind the key to the face of the key. The bottom of the key is shaped like a gutter and a two inch drain line drains this gutter to the bottom of the shaft.

Working Copy

3.5.2.3 The "Pull Bob" switch is a counter balanced lever arm type switch. (See Figure UH III-18) An adjustable weight is used to balance the weight of the pull bob cord and the weight at the bottom of the cord. The counterweight of the assembly is held in position by a set screw.

3.5.2.4 The access gates at the collar and the station are pipe framed gates covered with "cyclone" type fencing fabric. At the collar and station level there are a pair of gates east and west of the conveyance.

3.6 Instrumentation and Control Information **[All Shafts & Hoists, Refer to Chapter G]**

3.6.1 UH06 I & C Information for the Waste Hoist System

A listing of I & C information is shown on Table UH III-1. A brief discussion of each of the items follows if the operation and purpose of the instrument is not obvious. The indications of the Annunciator panel, (Figure UH III-9) is also discussed if their operation is not obvious.

3.6.1.1 The Waste Hoist Series Six Panel. (Figure UH III-8)

3.6.1.1.1 The Men Working In Shaft Light is energized by the Manual Speed selector switch when it is placed in the Shaft Inspection position, or when any of the shaft gates are opened.

3.6.1.1.2 The Conveyance Carries Personnel/Material indicating lights receive their signal from the "Transport Selector" switch.

3.6.1.1.3 The Conveyance Traveling Up/Down lights will energize when the Hoist/Lower Auxiliary relays are energized and the brakes are released.

3.6.1.1.4 The "Conveyance in Position to Synchronize" light will energize when the conveyance is stopped by the automatic stop controls at the collar, in either the personnel or material mode. It will also energize when the operator positions the conveyance in the proper position (Material or Personnel Deck, depending on the position of the Transport Selector Switch) in the manual mode.

3.6.1.1.5 The "Conveyance Synchronized" light will energize when the conveyance has been resynchronized. This will occur when the control system has resynchronized the Lilly to the collar position.

3.6.1.1.6 The Mine Evacuation Alarm switch will activate the evacuation alarm system. The hoist operator will not normally initiate this signal. Mine evacuation is normally initiated by the CMR using controls at his disposal.

Working Copy

3.6.1.1.7 The Pivot rail "Raise" and "Lower" push buttons work through the series six circuitry to produce an output that energizes a relay to raise or lower the pivot rails.

3.6.1.1.8 The Push Button to deploy the chairs will energize and latch an output signal to deploy the chairs providing the conveyance is in position for chairing. (There is a similar push button at the station operating panel that will control the same latch relay.) Once the chair is deployed limit switches will open the latch circuit and stop the chairing operation. If the "Hoist Mode Selector" switch is in "Semi-Auto, the "Control Location" switch is in "Level Station and Conveyance", and the "Transport Selector" switch is in "Material", the chairing operation will occur automatically when the conveyance reaches the position for chairing.

3.6.1.1.9 The Push Button to stow the chairs will energize and latch an output signal to stow the chairs providing the conveyance is unchaired. (There is no chair stow push button at the station operating panel.) Once the chair is stowed, limit switches will open the latch circuit and stop the stowing operation. If the "Hoist Mode Selector" switch is in "Semi-Auto", and the "Control Location" switch is in "Level Station and Conveyance", the stowing operation will occur automatically when the conveyance is unchaired.

3.6.1.1.10 The push button to start the "Motor Blower and Exciter System" will energize the blower motor to cool the drive motor and energize the field of the drive motor. If both the blower motor and the exciter relay energize, both control circuits will latch in, and the blower motor will continue to run and the field will stay energized.

3.6.1.1.11 The push button to stop the "Motor Blower and Exciter System" will de-energize the blower motor. The field of the drive motor will de-energize only if the brakes are set. In addition, the field excitation will automatically be terminated if the blower starter motor breaker opens, but only if the brakes are set. The field excitation will also be automatically removed under field overcurrent conditions. If field excitation is removed the control circuitry will initiate a controlled stop.

3.6.1.1.12 The "Test Start" push button will simulate local control of the conveyance from the Master Control Station. When pressed this switch simulates the local control panels from the Master Control Station for test purposes. In order for this switch to function, the conveyance must be at either the Collar or the Station, the Mode Selector switch must be in "Test", the Master switch must be in "Neutral", the Jog relays must be de-energized, the Control Location Selector switch must be in the "Master Control Station" position, the pivot rails up and the chairs must be stowed.

Working Copy

3.6.1.1.13 The Manual Synchronize push button will synchronize the Lilly to the Collar level providing certain interlocks have been satisfied. The conveyance must be at the collar, the loop contactor must be closed, the brakes must be set, the Lilly must be in the zone to resynchronize, and the Manual/Auto Synchronize switch must be in the "Manual" position.

3.6.1.1.14 The Manual/Auto Synchronize switch will set up the control circuitry to permit manual synchronization or automatic synchronization when conditions are correct. Auto synchronization will occur when conveyance is at the collar, the loop contactor is closed, the brakes are set, the Lilly is in the zone to resynchronize, and the Manual/Auto Synchronize switch is in the "Auto" position.

3.6.1.1.15 The Control Test and the Brake Maintenance switches are no longer used.

3.6.1.1.16 The Brake Dump Valves Test push button tests the operation of the normal emergency braking system. Testing is accomplished with the hoist initially reset and stopped. The push button is depressed and held, and hoist movement is attempted. If the system is operating properly, the brakes will set soon after the brake fluid pressure rises above 1,200 PSI during brake release.

The motor torque will then operate against the brakes, similar to the action of a Static Brake Test. When the Brake Dump Valves Test push button is released after a successful test, the hoist will trip off-line.

3.6.1.1.17 The Brake Dump Pressure Timer Reset push button is used to reset the Dump Pressure Timer, which is a perquisite to resetting the hoist following a Brake Dump Valves Test.

3.6.1.1.18 The Emergency Brake Valves Test push button is used to perform a static test of the operation of the Emergency Brake solenoid valves. This test is similar to the Static Brake Test.

3.6.1.1.19 The Car On Conveyance indicating light illuminates when a material car is present on the conveyance.

3.6.1.1.20 The Car In Position indicating light illuminates when the material car is in position for securing pin to be inserted.

3.6.1.1.21 The Pin In Place indicating light illuminates when the material car securing pin is in place.

Working Copy

3.6.1.1.22 The Battery #1 Low Voltage indicating light illuminates and flashes when the voltage of the corresponding conveyance communications 12-volt battery drops to less than 9 volts.

3.6.1.1.23 The Battery #2 Low Voltage indicating light illuminates and flashes when the voltage of the corresponding conveyance communications 12-volt battery drops to less than 9 volts.

3.6.1.2 The Waste Hoist Master Control Console. (Figure UH III-7)

3.6.1.2.1 The "Conveyance Chaired" indicating light will illuminate when the chair is deployed, the Transport Selector switch is in the "Material" mode, and the storage level final stop limit switch is activated.

3.6.1.2.2 The "Conveyance Unchaired" indicating light will illuminate when the "Conveyance Chaired" light extinguishes.

3.6.1.2.3 The "Programmer Bypassed" indicating light will illuminate when the Programmer Bypass defeat switch is in the "Normal" position, and the loop contactor control relays are closed and one of the following is true: 1. The DDP fails and the mode is manual, or 2. The DDP is operable and power is lost or the mode is changed while conveyance is not at the collar.

3.6.1.2.4 The Safety Reset switch will close the loop to energize the loop contactor when all the other interlocks have been satisfied.

3.6.1.2.5 The Dynamic Brake Test Switch is no longer used.

3.6.1.2.6 The Overtravel Backout switch is a five position spring return to the normal position switch. In the "Lower OT Test" position the Lilly lower limit switch is bypassed to permit testing of the next limit switch in the lower direction. The "Backout of Lower" position permits resetting the loop contactor so that the conveyance can be raised back to the normal operating range. The "Raise OT Test" and the "Backout of Raise" positions function in the same manner but for the top limit switches.

3.6.1.2.7 The Hoist Mode Selector switch in the "Tread Grooving" position limits the conveyance speed to an appropriately low speed; in the "Shaft Inspection" position limits the speed to 120 feet per minute; in the "Manual", "Test", and "Semi-Auto" positions limits the speed to 500 feet per minute.

3.6.1.2.8 The Programmer Bypass/Defeat switch is a key switch that in the "Defeat" position permits normal speed operation of the conveyance. The Hoist Mode selector switch must be in "Manual" and the Control Location switch must be in the "Master Control Station" position.

Working Copy

3.6.1.2.9 The Load Selector switch is a key switch used to provide armature current in the direction expected for the load. When placed in the "Heavy" position the hoist system provides torque to hold the conveyance. The switch is normally placed in the "Heavy" position with loads above 10 tons. The "Normal" position causes the hoist system to provide torque to hold the counterweight.

3.6.1.2.10 The Controlled Stop (on the series six panel) and the Emergency Stop push buttons both stop the conveyance. The Controlled Stop action is a less rapid deceleration, approximately 1 foot per/sec, per sec, than the Emergency Stop action which is less than 16 feet per/sec, per sec.

3.6.1.2.11 The Radio Control Permissive Bypass switch is used to bypass the conveyance material car interlocks, conveyance Emergency Stop switch or loss of control radio communications functions in order to move the hoist conveyance to a station when all interlocking criteria are not met. This is a spring return to Normal switch, and it is necessary to hold the switch in the Bypass position while initiating hoist movement. Once the hoist is moving, the bypass function locks in and the switch may be released. Once the hoist stops, the bypass function automatically resets.

Only those functions that require bypassing will be bypassed when hoist movement is initiated. Any subsequent opening of interlocks of a type other than those presently bypassed will cause the hoist to execute an emergency stop, and the bypass operation will need to be repeated or the interlock problem resolved before the hoist can be operated again.

3.6.1.3 The Waste Hoist Collar and Station Control Panels.(Figure UH III-11)

All the controls and indications on these panels are self evident except for the Chair Deploy push button on the Station Control Panel. See paragraph 3.6.6.1.8 for information on this push button.

3.6.1.4 The Waste Hoist Chairing Device Control Panel. (Figure UH III-13)

3.6.1.4.1 The Operational Mode selector switch selects whether the chairing device is operated in the "Norm" mode with all interlocks in effect or in the "Maintenance" mode with the interlocks bypassed.

3.6.1.4.2 The Deploy and Stow push buttons are only active if the Operation Mode selector switch is in the Maintenance mode. When these push buttons are active the chair can be operated without the added protection of the normal interlocks.

3.6.1.4.3 The reset buttons on the lower left of the panel are to reset the line starters for the hydraulic pumps that supply the moving force for the chair rails.

Working Copy

3.6.1.5 The Waste Hoist Annunciator Alarm Panel. (Figure UH III-9)

When the safety reset pushbutton is depressed, all indicators whose signal is not still present are reset and the lamps extinguished.

3.6.1.5.1 The Regulator Malfunction light will energize when a fault is detected in the Hoist Speed regulator circuitry.

3.6.1.5.2 The Normal Emergency Braking Not Available light will energize when the braking system Dump Pressure Timer detects that the brake fluid pressure has not decreased at the proper rate during an Emergency Stop.

3.6.1.5.3 The Overcurrent and Overvoltage light will energize when there is an overcurrent or Overvoltage condition in the Armature circuit of the Hoist Motor. The Overvoltage light will also illuminate when the armature loop contactor is opened. This is a normal occurrence, and is due to the nature of the motor drive.

3.6.1.5.4 The Power Converter Emergency Fault light will energize when the alarm circuitry senses a fault in the Silicon Controlled Rectifier power conversion equipment.

3.6.1.5.5 The AC Bridge Power Undervoltage light will energize when the alarm circuitry senses low voltage out the SCR bridge circuitry supplying power to the Hoist motor.

3.6.1.5.6 The AC Bridge Feeder Open light will energize when the alarm circuitry senses the supply breaker to SCR bridge circuitry has opened.

3.6.1.5.7 The Series Six Fault light will energize when the a fault occurs in the programmable controller (CPU), or any of the Modules in the Series Six Panel develops a fault light.

3.6.1.5.8 The Jammed Conveyance light will energize when the Hoist speed from the tachometer and the rope speed from the rope speed sensor do not agree within tolerance. This sensing method functions because if either the conveyance or the counterweight becomes jammed, excessive slip will occur between the drum and the ropes.

3.6.1.5.9 The Material Car Permissive light will energize if the conveyance material car is not in position or the securing pin is not in place while the hoist is in motion.

3.6.1.5.10 The Brake Maintenance light will energize when either the left or right brake is released for maintenance.

Working Copy

3.6.1.5.11 The Control Test light circuitry has been disconnected. This alarm does not function.

3.6.1.5.12 The Failure to Decelerate Properly light will energize if the speed of the hoist has not been reduced to the required speed in a reduced speed zone when the hoist reaches the deceleration check magnetic switches, in the hoist and lower modes.

3.6.1.5.13 The Low Oil Level light will energize if a low oil level exists in either of the two oil reservoir tanks associated with the brake system.

3.6.1.5.14 The Hoist Motor Stall light will energize when the hoist is stopped and the motor current is excessive for an extended (approximately 10 seconds) period of time.

3.6.1.5.15 The Hoist Traveling In Wrong Direction light will energize when the hoist moves in the direction opposite to the speed reference from the control system.

3.6.1.5.16 The Radio Emergency Stop light will energize if the conveyance Emergency Stop pushbutton is depressed with control radio communications available.

3.6.1.5.17 The Radio Communications Not Available light will energize when control radio communications are lost, but the hoist control room radio PLC is still operational.

3.6.1.5.18 The Radio Control Malfunction light will energize when the hoist control room radio malfunctions.

3.6.1.5.19 The Distance Programmer Permissive light will clear if any one of three conditions are met.

1. The DDP OK, and the Hoist mode selector switch in manual, and the conveyance at the top. (Once the loop contactor is closed the Hoist mode selector switch can be switched out of Manual).

2. The DDP not OK, but the Hoist mode selector switch in manual.

3. DDP OK, but out of sequence and in manual mode.

The light will energize if all three of the above conditions are not met.

3.6.1.5.20 The Distance Programmer Malfunction light will energize if the conveyance does not accelerate properly within 30 seconds. This light is only active if the Hoist Mode selector switch is in the "Test" mode or "Semi-Auto" position. This alarm is also de-activated when the brakes are set.

Working Copy

3.6.1.5.21 The Lilly Gear Loss light will energize if the Lilly does not sense a speed of 30 percent when the speed of the conveyance as measured by the speed tachometer is above 30 percent.

3.6.1.5.22 The Chair out of Position light will energize if the chair is not stowed while in personnel mode, or if in manual mode the conveyance is lowered or stopped while not in position to chair.

3.6.1.5.23 The Pivot Rail Out of Position light will energize if the collar pivot rails are not retracted when the conveyance leaves the collar area, or if the station pivot rails are not retracted when the conveyance leaves the station area while in the material mode. The light will illuminate anytime the pivot rails are not retracted while in the personnel mode.

3.6.1.5.24 The Faulty Transfer from Primary to Standby Brake Pump light will energize and the hoist will trip off-line whenever the primary pump fails and the standby pump starts. This light will de-energize when the hoist is reset. If the backup pump did not start, the hoist cannot move.

3.6.1.5.25 The Programmer Bypass Defeat light will energize when the Programmer/Bypass Defeat switch is placed in the "Defeat" position.

3.6.1.5.26 The Converter Annunciator light will energize when any of the LED fault lights in the SCR power converter panel is energized.

3.6.1.5.27 The Left & Right Brake Wear lights will energize when any of the limit switches inside the brake assembly sense excessive travel, which is indicative of brake lining wear.

3.6.1.5.28 The Excessive Tread Wear light will energize when the limit switch associated with the tread wear measuring device opens, indicating excessive tread wear.

3.6.1.5.29 The Synchronizer Motor Overload light will energize if the contactor that supplies power to the motor that resynchronizes the Lilly system to the DDP system opens on over load.

3.6.1.5.30 The Excessive Rope Creep alarm will energize if the synchronizer controls fail to synchronize within 30 seconds after the conveyance reaches the collar level.

3.6.1.6 The function of the limit switches shown on Table UH III-1 are to perform various control functions, or to indicate operation conditions to the operator. To perform these functions each limit switch may form logic circuits with other parameter monitors. The purpose of the following discussion is to provide information on the use of the limit switches whose function is not readily apparent. A complete description of how the limit switch interacts with the control system can be found on the system control schematic.

Working Copy

3.6.1.6.1 Limit switches DECLS 1, 2, 3, and 4 are used as back ups to the DDP. If the speed of the hoist has not reduced sufficiently before these magnetic switches are opened, the hoist will be brought to an emergency stop.

3.6.1.6.2 The LGLLS, Lilly Gear Loss limit switch is a lever actuated limit switch that closes above 30 percent speed.

3.6.2 UH07 I & C Information for the Waste Hoist Shaft System

There is no I & C equipment associated with this subsystem.

Working Copy

TABLE UH III-1 Waste Hoist Instrumentation Controls & Interlocks

Instrument Numbers	Function	Type	Range	Accuracy	Setpoint	Instrument Sensor Location	Readout Location
Waste Hoist Series Six Panel							
Indicator Lights							
IL53	Ind Prmry Brk Pump On	Incandescnt	On/Off	NA	NA	Pump Starter	Series Six Pnl
IL54	Ind Stdby Brk Pump On	Incandescnt	On/Off	NA	NA	Pump Starter	Series Six Pnl
IL55	Ind Motor Blower On	Incandescnt	On/Off	NA	NA	Blwr & Fld Exite Str	Series Six Pnl
IL56	Speed Cnt Sw, Neutrl	Incandescnt	On/Off	NA	NA	Hoist Cont Pnl	Series Six Pnl
IL57	Ind Conv In Pos, Sync	Incandescnt	On/Off	NA	NA	Prox Sw in Shft	Series Six Pnl
IL58	Ind Conv Synchronized	Incandescnt	On/Off	NA	NA	Hst Cont Pnl & Brake	Series Six Pnl
IL61	Ind Conv Trvlg Up	Incandescnt	On/Off	NA	NA	Hst Cont Pnl & Brake	Series Six Pnl
IL62	Ind Conv Trvlg Dwn	Incandescnt	On/Off	NA	NA	Hst Cont Pnl & Brake	Series Six Pnl
IL68	Ind Men Work in Shft	Incandescnt	On/Off	NA	NA	Hoist Cont Pnl	Series Six Pnl
IL69	Conv Carries Material	Incandescnt	On/Off	NA	NA	Hoist Cont Pnl	Series Six Pnl
IL70	Conv Carries Pers	Incandescnt	On/Off	NA	NA	Hoist Cont Pnl	Series Six Pnl
IL71	Ind Chairs Stowed	Incandescnt	On/Off	NA	NA	Lim Sw on Chr Rail	Series Six Pnl
IL72	Ind Chairs Deployed	Incandescnt	On/Off	NA	NA	Lim Sw on Chr Rail	Series Six Pnl
IL73	Ind Clr Lvl Pivot Up	Incandescnt	On/Off	NA	NA	Lim Sw at Pivot Rail	Series Six Pnl
IL74	Ind Clr Lvl Pivot Dwn	Incandescnt	On/Off	NA	NA	Lim Sw at Pivot Rail	Series Six Pnl
IL75	Ind Brakes Released	Incandescnt	On/Off	NA	NA	Inside Brake Housing	Series Six Pnl
IL76	Ind Brakes Set	Incandescnt	On/Off	NA	NA	Inside Brake Housing	Series Six Pnl
IL77	Ind Str Lvl Pivot Up	Incandescnt	On/Off	NA	NA	Lim Sw at Pivot Rail	Series Six Pnl
IL78	Ind Str Lvl Pivot Dwn	Incandescnt	On/Off	NA	NA	Lim Sw at Pivot Rail	Series Six Pnl
IL79	Ind Shaft Gates Close	Incandescnt	On/Off	NA	NA	Lim Sw at Shft Gates	Series Six Pnl

Working Copy

TABLE UH III-1 Waste Hoist Instrumentation Controls & Interlocks (continued)

Instrument Numbers	Function	Type	Range	Accuracy	Setpoint	Instrument Sensor Location	Readout Location
Waste Hoist Series Six Panel Switches							
Later	Mine Evacuation Alrm	Two Pos Sprng	On/Off	NA	NA	Series Six Pnl	NA
PB54	Test Start	Push Button	On/Off	NA	NA	Series Six Pnl	NA
PB56	Start West Brk Pmp	Push Button	On/Off	NA	NA	Series Six Pnl	NA
PB57	Start East Brk Pmp	Push Button	On/Off	NA	NA	Series Six Pnl	NA
PB58	Prmary Brake Pump Stp	Push Button	On/Off	NA	NA	Series Six Pnl	NA
PB59	Stdby Brake Pump Stp	Push Button	On/Off	NA	NA	Series Six Pnl	NA
PB60	Strt Mot Blr,Exc Sys	Push Button	On/Off	NA	NA	Series Six Pnl	NA
PB61	Strt Blow, Excite Fld	Push Button	On/Off	NA	NA	Series Six Pnl	NA
PB62	Manual Synchronize	Push Button	On/Off	NA	NA	Series Six Pnl	NA
PB64	Collar Levl Signal	Push Button	On/Off	NA	NA	Series Six Pnl	NA
PB65	Storage Levl Signal	Push Button	On/Off	NA	NA	Series Six Pnl	NA
PB66	Rais Collar Lvl Pivots	Push Button	On/Off	NA	NA	Series Six Pnl	NA
PB67	Lwr Strg Lvl Pivots	Push Button	On/Off	NA	NA	Series Six Pnl	NA
PB68	Rais Strg Lvl Pivots	Push Button	On/Off	NA	NA	Series Six Pnl	NA
PB69	Lwr Strg Lvl Pivots	Push Button	On/Off	NA	NA	Series Six Pnl	NA
PB70	Stow Chairs	Push Button	On/Off	NA	NA	Series Six Pnl	NA
PB71	Deploy Chairs	Push Button	On/Off	NA	NA	Series Six Pnl	NA
PB 72	Controlled Stop	Push Button	On/Off	NA	NA	Series Six Pnl	NA
SW6	Brake Maintenance*	3 Pos Snap	East/Normal/West	NA	NA	Series Six Pnl	NA
SW7	Control Test*	Two Pos Snap	On/Off	NA	NA	Series Six Pnl	NA
SW8	Man/Auto Synchronize	Two Pos Snap	Manual/Auto	NA	NA	Series Six Pnl	NA

* = Not Used

Working Copy

TABLE UH III-1 Waste Hoist Instrumentation Controls & Interlocks (continued)

Instrument Numbers	Function	Type	Range	Accuracy	Setpoint	Instrument Sensor Location	Readout Location
Waste Hoist Master Control Panel							
Indicator Lights							
IL51	On Manual	Incandescnt	On/Off	NA	NA	Control System	Hoist Cont Pnl
IL52	Semi-Auto	Incandescnt	On/Off	NA	NA	Control System	Hoist Cont Pnl
IL59	Collar Level Signal	Incandescnt	On/Off	NA	NA	Ser 6/Collar Pnl	Hoist Cont Pnl
IL60	Storage Level Signal Incandescnt	On/Off		NA	NA	Ser 6/Strg Lvl Pnl	Hoist Cont Pnl
IL63	Conv at Collar Lvl	Incandescnt	On/Off	NA	NA	Lim Sws at Collar	Hoist Cont Pnl
IL64	Conv at Storage Lvl	Incandescnt	On/Off	NA	NA	Lim Sws at Station	Hoist Cont Pnl
IL65	Conv in Pos, Chairing	Incandescnt	On/Off	NA	NA	Trans Sel Sw, Lim Sw	Hoist Cont Pnl
IL66	Conv Chaired	Incandescnt	On/Off	NA	NA	Chair & Conv Lim Sws	Hoist Cont Pnl
IL67	Conv Unchaired	Incandescnt	On/Off	NA	NA	Chair & Conv Lim Sws	Hoist Cont Pnl
IL81	13.8 kV Sw Clsd	Incandescnt	On/Off	NA	NA	AC Bkr Folowr Relay	Hoist Cont Pnl
IL82	13.8 kV Sw Open	Incandescnt	On/Off	NA	NA	AC Bkr Folowr Relay	Hoist Cont Pnl
IL83	Loop Contactor Clsd Incandescnt	On/Off		NA	NA	Control System	Hoist Cont Pnl
IL84	Loop Contactor Open	Incandescnt	On/Off	NA	NA	Control System	Hoist Cont Pnl
IL85	Programmer Bypassed	Incandescnt	On/Off	NA	NA	Cntrl Sys, Lim Sws	Hoist Cont Pnl
IL86	Ind. Chair power loss	Incandescnt	Flashing	NA	NA	Cr5 & Chair Cont Pnl	Series Six Pnl
IL87	Car On Conveyance	Incandescnt	On/Off	NA	NA	Hoist Conveyance	Hoist Cont Pnl
IL88	Car In Position	Incandescnt	On/Off	NA	NA	Hoist Conveyance	Hoist Cont Pnl
IL89	Pin In Place	Incandescnt	On/Off	NA	NA	Hoist Conveyance	Hoist Cont Pnl
IL90	Battery #1 Low Voltage	Incandescnt	Flashing	NA	NA	Hoist Conveyance	Series Six Pnl
IL91	Battery #2 Low Voltage	Incandescnt	Flashing	NA	NA	Hoist Conveyance	Series Six Pnl
Waste Hoist Master Control Panel							
Control Switches							
PB52	Safety Reset	Push Button	On/Off	NA	NA	Hoist Cont Pnl	NA
PB51	Emergency Stop	Push Button	On/Off	NA	NA	Hoist Cont Pnl	NA
PB73	Brake Dump Valves Tst	Push Button	On/Off	NA	NA	Hoist Cont Pnl	NA
PB74	Brk Dump Press Timer Reset	Push Button	On/Off	NA	NA	Hoist Cont Pnl	NA
PB75	Emerg Brk Valves Test	Push Button	On/Off	NA	NA	Hoist Cont Pnl	NA
SW1	Transport Sel Sw	2 Pos Snap	Mtrial/Prsnel	NA	NA	Hoist Cont Pnl	NA
SW2	Dynamic Brk Test*	3 Pos Snap	Lft/Norm/Rght	NA	NA	Hoist Cont Pnl	NA
SW3	Overtrvl Backout	5 Pos Spr Rtn Key Sw	See Text	NA	NA	Hoist Cont Pnl	NA
SW4	Hoist Mode Sel Sw	5 Pos Snap	See Text	NA	NA	Hoist Cont Pnl	NA
SW5	Control Loc Sel Sw	3 Pos Snap	See Text	NA	NA	Hoist Cont Pnl	NA
SW9	Programmer Defeat Sw	2 Pos Snp,Key	Norm/Defeat	NA	NA	Hoist Cont Pnl	NA
SW10	Load Selector Sw	2 Pos Snp,Key	Night/Heavy	NA	NA	Hoist Cont Pnl	NA

Working Copy

TABLE UH III-1 Waste Hoist Instrumentation Controls & Interlocks (continued)

Instrument Numbers	Function	Type	Range	Accuracy	Setpoint	Instrument Sensor Location	Readout Location
BSW	Manual Brake Control	Joy Stk,Snap	Rel/Set	NA	NA	Hoist Cont Pnl	NA
MSW	Master Switch	J Stk,Spr Rtn	Lower/Hoist	NA	NA	Hoist Cont Pnl	NA
* = Not Used							
Waste Hoist Master Control Panel							
Indications							
VM	Hoist Motor Volts	Analog Meter	00/0/600 Volts	Later	NA	Control System	Hoist Cont Pnl
AMI	Hoist Motor Amps	Analog Meter	3/0/3 Kiloamps	Later	NA	Control System	Hoist Cont Pnl
SPDMI	Hoist Speed	Analog Meter	600/0/600 FPM	Later	NA	Control System	Hoist Cont Pnl
DSM	Digital Speed Meter	Analog Meter	0 to 1000 FPM	Later	NA	Control System	Hoist Cont Pnl
DI	Depth Indicator	Analog Meter	Approx 3000 Ft	Later	NA	Control System	Hoist Cont Pnl
Waste Hoist Collar and Station Control Panels (One at Collar, One at Station)							
IL11, IL21	On Manual	Incandescent	On/Off	NA	NA	Control System	Lcl Cont Panel
IL12, IL22	On	Incandescent	On/Off	NA	NA	Control System	Lcl Cont Panel
PB14, PB24	Strt HoistTrip	Sprng Rtn PB	On/Off	NA	NA	Control Panel	None
PB12, PB22	Jog Conv Up	Sprng Rtn PB	On/Off	NA	NA	Control Panel	None
PB13, PB23	Jog Conv Down	Sprng Rtn PB	On/Off	NA	NA	Control Panel	None
PB11, PB21	Emerg Stop	Push Button	On/Off	NA	NA	Control Panel	None
PB15, PB25	Signal	Push Button	On/Off	NA	NA	Control Panel	None
Waste Hoist Pivot Rail Control Panels (Two at Collar, One at Station)							
N/A	Open	Incandescent	On/Off	NA	NA	Pivot Rail Lim Sw	P. R. Cont Pnl
N/A	Closed	Incandescent	On/Off	NA	NA	Pivot Rail Lim Sw	P. R. Cont Pnl
N/A	Selector Switch	3 Pos Snap	Local/Off/Remote	NA	NA	P. R. Cont Pnl	None
N/A	Control Switch 3 Pos Snap		Open/Off/Closed	NA	NA	P. R. Cont Pnl	None
Waste Hoist Tread Grooving Control Panels (Two)							
IL31, IL41	On Manual	Incandescent	On/Off	NA	NA	Trd Groove Cont Pnl	Trd Groove Cont Pnl
IL32, IL42	On Semi Auto	Incandescent	On/Off	NA	NA	Trd Groove Cont Pnl	Trd Groove Cont Pnl
PB32, PB42	Jog UP	Sprng Rtn PB	On/Off	NA	NA	Trd Groove Cont Pnl	None
PB33, PB43	Jog Down	Sprng Rtn PB	On/Off	NA	NA	Trd Groove Cont Pnl	None
PB31, PB41	Emergency Stop	Push Button	On/Off	NA	NA	Trd Groove Cont Pnl	None

Working Copy

TABLE UH III-1 Waste Hoist Instrumentation Controls & Interlocks (continued)

Instrument Numbers	Function	Type	Range	Accuracy	Setpoint	Instrument Sensor Location	Readout Location
Waste Hoist Conveyance Control Panel (On Conveyance)							
N/A	Stat Conveyance	Sprng Rtn PB	On/Off	NA	NA	Conv Control	None
N/A	Jog Conv Up	Sprng Rtn PB	On/Off	NA	NA	Conv Control Panel	None
N/A	Jog Conv Down	Sprng Rtn PB	On/Off	NA	NA	Conv Control Panel	None
N/A	Emerg Stop	Push Button	On/Off	NA	NA	Conv Control Panel	None
Waste Hoist Chairing Device Control Panel							
N/A	Indicate Pwr On	Incandescent	On/Off	NA	NA	C.D. Control Panel	Control Panel
N/A	Chair Beams Deployed	Incandescent	On/Off	NA	NA	Lim Sw on Beams	Control Panel
N/A	Chair Beams Stowed	Incandescent	On/Off	NA	NA	Lim Sw on Beams	Control Panel
N/A	Indicate Norm Mode	Incandescent	On/Off	NA	NA	Control System	Control Panel
N/A	Indicate Maint Mode	Incandescent	On/Off	NA	NA	Control System	Control Panel
N/A	Power On/Off Sw	2 Pos Snap	On/Off	NA	NA	Control Panel	Control Panel
N/A	Operational Mode Sw	2 Pos Snap	Norm/Maint	NA	NA	Control Panel	Control Panel
N/A	Deploy Chair Beams	Sprng Rtn PB	On/Off	NA	NA	Control Panel	Control Panel
N/A	Stow Chair Beams	Sprng Rtn PB	On/Off	NA	NA	Control Panel	Control Panel
N/A	Reset Switch	Push Button	Reset/Tripped	NA	NA	Control Panel	None
N/A	Reset Switch	Push Button	Reset/Tripped	NA	NA	Control Panel	None

Working Copy

TABLE UH III-1 Waste Hoist Instrumentation Controls & Interlocks (continued)

Instrument Numbers	Function	Type	Range	Accuracy	Setpoint	Instrument Sensor Location	Readout Location
Waste Hoist Limit Switches							
CHDLS1-CHDLS2	2 Chair Deployed Lss	Lever LS	N/A	N/A	Ch Fully Deployed	Chair Beams	Series Six Pnl
CHSLS1-CHSLS2	2 Chair Stowed Lss	Lever LS	N/A	N/A	Ch Fully Stowed	Chair Beams	Series Six Pnl
CIPLS	Matl Car In Pos LS	Magnetic Ss	N/A	N/A	Matl Car In Pos To Pin	Hoist Conveyance	Operating Pnl
CLSG1LS-CLSG2LS	2 Colr Lvl Gate Close	Lever LS	N/A	N/A	Gates Closed	At Gates	Series Six Pnl
COCELS	Matl Car On Conv	Magnetic Sw	N/A	N/A	Matl Car On Conv	Hoist Conv East End	Operating Pnl
COCWLS	Matl Car On Conv	Magnetic Sw	N/A	N/A	Matl Car On Conv	Hoist Conv West End	Operating Pnl
CPR1EXLS	Collar Piv Rail 1 Ext	Lever LS	N/A	N/A	Piv Rails Ext.	Chair Beams	Series Six Pnl
CPR1RLS	Col Piv Rail 1, Retrt	Lever LS	N/A	N/A	Piv Rails Ret.	Chair Beams	Series Six Pnl
CPR2EXLS	Col Piv Rail 2 Ext	Lever LS	N/A	N/A	Piv Rails Ext.	Chair Beams	Series Six Pnl
CPR2RLS	Col Piv Rail 2, Retrt	Lever LS	N/A	N/A	Piv Rails Ret.	Chair Beams	Series Six Pnl
DECLS1	Decel Check	Magnetic Sw	N/A	N/A	Fixed In Shaft	Storage Level	None
DECLS2	Decel Check	Magnetic Sw	N/A	N/A	Fixed In Shaft	Storage Level	None
DECLS3	Decel Check	Magnetic Sw	N/A	N/A	Fixed In Shaft	Collar Level	None
DECLS4	Decel Check	Magnetic Sw	N/A	N/A	Fixed In Shaft	Collar Level	None
HSTPMLS	Top Stop Material	Magnetic SW	N/A	N/A	Conv At Col-Mat	Collar Level	Operating Pnl
HSTPPLS	Top Stop Personnel	Magnetic Sw	N/A	N/A	Conv At Col-Pers	Collar Level	Operating Pnl
LB1LLS-LB2LLS	2 Lft Brk Release	Lever LS	N/A	N/A	Brk Rel	Brakes	Series Six Pnl
LBVLS	Left Brk Valved Off	Lever LS	N/A	N/A	Left Brk Valve Closed	Hyd Is. Valve	Annunciator Pnl
LBWLSIL-LBWLS2R	2 Lft Brk Wear	Lever LS	N/A	N/A	Excess Brk Wear	Brakes	Annunciator Pnl
LGLLS	Lilly Gear Loss	Lever LS	N/A	N/A	Loss of Motion	Lilly	Annunciator Pnl
LOLLS1	Low Oil Level, Prime	Float Switch	N/A	N/A	Oil Level Low	Hyd Oil Tank	#1 Annunciator Pnl
LOLLS2	Low Oil Level, Stdnby	Float Switch	N/A	N/A	Oil Level Low	Hyd Oil Tank	#2 Annunciator Pnl
LOSLS	Lilly Overspeed	Lever LS	N/A	N/A	10-% Overspeed	Lilly	Annunciator Pnl
LOTLS1	Lilly OT, Lower	Lever LS	N/A	N/A	Lilly Lower Overtravel	Lilly	Annunciator Pnl
LOTLS2	Overtravel	Lever LS	N/A	N/A	Shaft Lower Overtravel	Hoist Track	Annunciator Pnl
LOTLS3	Overtravel	Lever LS	N/A	N/A	Lower Track Limit	Hoist Track	Annunciator Pnl
LOTLS4	Overtravel	Magnetic Sw	N/A	N/A	Shaft Lower Overtravel	Hoist Track	Annunciator Pnl
LSTPMLS	Bot Stop Material	Magnetic Sw	N/A	N/A	Conv at Sta-Mat	Hoist Track	Operating Pnl
LSTPPLS	Bot Stop Personnel	Magnetic Sw	N/A	N/A	Conv at Sta-Pers	Hoist Track	Operating Pnl
PIPLS	Matl Car Pinned	Magneticj Sw	N/A	N/A	Matl Car Pin In Place	Hoist Conv	Operating Pnl
PRDWNLS	Pivot Rail Down	Lever LS	N/A	N/A	Rail Down	Pivot Rails	Series Six Pnl
PRUPLS	Pivot Rail Up	Lever LS	N/A	N/A	Rail Up	Pivot Rails	Series Six Pnl
RB1LLS-RB2LLS	2 Right Brk Release	Lever LS	N/A	N/A	Brk Released	Brakes	Series Six Pnl

Working Copy

TABLEUH III-1 Waste Hoist Instrumentation Controls & Interlocks (continued)

Instrument Numbers	Function	Type	Range	Accuracy	Setpoint	Instrument Sensor Location	Readout Location
RBVLS	Right Brk Valved Off	Lever LS	N/A	N/A	Valve Closed	Hyd Isolation Valve	Annunciator Pnl
RBWLSIL-RBWLS2R	2 Right Brk Wear	Lever LS	N/A	N/A	Execess Brk Wear	Brakes	Annunciator Pnl
ROTLS1	Lilly OT, Raise	Magnetic Sw	N/A	N/A	Lilly Hoist Overtravel	Lilly	Annunciator Pnl
ROTLS2	Overtravel	Magnetic Sw	N/A	N/A	Shaft Hoist Overtravel	Hoist Track	Annunciator Pnl
ROTLS3	Overtravel	Lever LS	N/A	N/A	Hoist Track Limit	Hoist Track	Annunciator Panel
SLSG1LS-SLSG2LS	2 Stor Lvl Gate Close	Lever LS	N/A	N/A	St Lev Gates Closed	Stor Levl Gates	Annunciator Pnl
SPREXLS	Stor Lev Piv R Extend	Lever LS	N/A	N/A	Rails Up	Pivot Rails	Series Six Panel
SPRRLS	Strg Lev P.R. Retract	Lever LS	N/A	N/A	Rails Down	Pivot Rails	Series Six Panel
SSCLS	Stop to Set Chairs	Magnetic Sw	N/A	N/A	Conv In Pos To Chair	Hoist Track	Operating Panel
SYNDLS	Sync Complete	Lever LS	N/A	N/A	Selsyn Synchronized	Lilly	Series Six Panel
SYNZLS	In Zone to Sync	Lever LS	N/A	N/A	Selsyn Synch Area	Lilly	Series Six Panel
TRFLS	Tail Rope Foul	Magnetic Sw	N/A	N/A	Tail Rope Fouled	Hoist Frame	Series Six Panel
TWLS	Tread Wear	Lever LS	N/A	N/A	Excessive Tread Wear	Headframe	Annunciator Panel

Working Copy

3.7 System Interfaces **All Shafts & Hoists, Refer to Chapter G**]

3.7.1 UH06 Waste Hoist

3.7.1.1 The Waste Hoist system requires service from the Electrical System ED00, the Plant Building, Facilities and Miscellaneous Equipment CF00, the Compressed Air System CA00, and the Plant Monitoring and Communication System CM00.

3.7.1.1.1 ED00

The Waste Hoist system needs power at 480 volts, three phase, 60 Hz with a power capacity to run a 600 horsepower motor via a solid state DC supply. Normal lighting, control system, and signaling system power at 115 volts, 60 Hz is required.

3.7.1.1.2 CF00

The CF00 System must supply the physical support structure for the Waste Hoist equipment.

3.7.1.1.3 CA00

Compressed air is needed to operate the deck selection on the Lilly control system.

3.7.1.1.4 CM00

Backup communication between the hoist operator, and the conveyance is accomplished with rope-a-com system. This system is furnished by the CM00 system. Two analog and ten contact channels shall be made available to monitor selected parameters of the Waste Hoist system.

3.7.1.1.5 The Waste Hoist system is a secondary interface with the WH00, and any other systems that uses the Conveyance for travel between the surface and the underground.

3.7.2 UH07 Waste Shaft

3.7.2.1 There are no primary interface systems associated with the Waste Shaft system. The shaft system does not require the services of any other system.

3.7.2.2 The Waste Shaft system provides services to the compressed Air System CA00, the Electrical Distribution system ED00, the Environmental Monitoring system EM00, the Plant Monitoring and Communication system CM00, and the Underground Ventilation System VU00.

Working Copy

3.7.2.2.1 CA00

The Waste shaft provides the path and support base for the 4 inch airline and its supports that supplies compressed air to the underground.

3.7.2.2.2 ED00

The Waste shaft provides the path and support base and supports for power lines required to supply 13.8 kV power to the underground.

3.7.2.2.3 EM00

The Waste shaft provides the path and support base and supports for the instrument cables needed for the geomechanical experiments being conducted in the shaft.

3.7.2.2.4 The Waste shaft provides the location for the geomechanical experiments conducted in the shaft

3.7.2.2.5 VU00

The Waste shaft provides an additional path for the incoming fresh air to the underground to enable the VU00 system to perform its function.

3.7.2.2.6 CM00

The Waste shaft provides the path and support base for the communication lines from the underground to the surface.

4.0 OPERATIONS **[All Shafts & Hoists, Refer to Chapter G]**

4.1 UH06 Waste Hoist

The WIPP Site Controlled Operating Procedure Program contains all current procedures applicable to the operation of the Waste Hoist, subsystem UH06.

5.0 SYSTEM LIMITATIONS, SETPOINTS, AND PRECAUTION **[All Shafts & Hoists, Refer to Chapter G]**

5.1 UH06 WASTE Hoist System

5.1.1 Operating Limits

The operating limits are listed in Table UH III-2. Proper system and component operation can not be assured if these limits are exceeded.

Working Copy

5.1.2 Setpoints and Alarms, WASTE Hoist System

The major setpoints involved in the controls of the Waste Hoist System are listed in Table UH III-3. All the system status and alarm signals are local except for twelve status conditions monitored by the CM00 system. The twelve status conditions monitored are: Hoist Motor Volts, Hoist Motor Amps, Hoist Control Power, Operating Mode--Manual, Operating Mode--Semi-Automatic, Hoist Abnormal Condition (Emergency Stop caused by a fault, a Controlled Stop, or a Protective Stop), Hoist Emergency Stop (Caused by Operator), Men Working in Shaft, Waste on Hoist, Personnel on Hoist, Hoist Up Travel, and Hoist Down Travel.

5.1.3 Precautions WASTE Hoist System

5.1.3.1 Shaft inspections and repair work in the shaft will be performed from substantial platforms equipped with bonnets or other overhead protection.

5.1.3.2 Cage doors shall remain closed when the conveyance is being hoisted or lowered.

5.1.3.3 Hand held radios are not to be used inside the hoist control room.

5.1.3.4 The load selector switch shall be in the "Heavy" position for loads 10 tons or greater, to prevent excessive rollback.

5.1.3.5 Total payload of the hoist with the workdeck installed shall not exceed 40 tons.

Working Copy

TABLE UH III-2 Operating Limits Waste Hoist

PARAMETER	LIMIT
Working Depth	2670 Feet
Maximum Payload	45 Tons
Maximum Working Speed	500 Fpm
Hoist House Temperature	Comfortable
Compressed Air	100 to 120 psi

TABLE UH III-3 Control Setpoints Waste Hoist

PARAMETER	FUNCTION	SETPOINT
Right/Left Brake Wear	Protective Stop	Vendor Supplied
Hoist Motor Overtemp	Protective Stop	Vendor Supplied
Excessive Tread Wear	Protective Stop	Vendor Supplied
Synchronizer Mot Overload	Protective Stop	Vendor Supplied
Power Conv Annun Reset Req	Protective Stop	Any Power Conv Alarm
Hoist Brg Over Temp	Protective Stop	Vendor Supplied
Hoist Mot Field Grd	Protective Stop	Hard Ground
Hoist Mot Armature Grd	Protective Stop	Hard Ground
Excessive Rope Creep	Protective Stop	Vendor Supplied
Oil Cool Fan Mot Ovrld	Protective Stop	Vendor Supplied
Dist Prog Prmisive De-energ	Controlled Stop	Various Cont Sys Cond
Dist Prog Malfunction	Controlled Stop	Various Cont Sys Cond
Lilly Gear Loss	Controlled Stop	Vendor Supplied
Brake Not Released	Controlled Stop	5 Seconds
Hoist Mot Air Flow Loss	Controlled Stop	Loss of Pow to Motor
Chair Out of Position	Controlled Stop	Various Cont Sys Cond
Pivot Rail Out of Pos	Controlled Stop	Various Cont Sys Cond
Brk Prs Low on Stby Pump	Controlled Stop	1200 Psi
Faulty Trans Pri to Stby Pmp	Controlled Stop	Breaker Open (Note 1)
Prog Bypass Defeat	Controlled Stop	Key Switch In Bypass
Fail To Dec Properly	Emergency Stop	Above 52/26% Speed in Apprch Zones
Norm Emerg Braking Not Avail	Emergency Stop	>1200 PSI/DPT timed out
Hoist Tvl Wrong Dir	Emergency Stop	Control System Function
Hoist Mot Fld Overcurrent	Emergency Stop	Vendor Supplied
AC Brdg Pow Under Volt	Emergency Stop	Vendor Sup UV Relay
AC Brdg Pow Feed Open	Emergency Stop	Feeder Bkr Open
Series Six Fault	Emergency Stop	Various Flts in S6 Pnl

Working Copy

TABLE UH III-3 Control Setpoints Waste Hoist (continued)

PARAMETER	FUNCTION	SETPOINT
Fld Exciter AC Input Loss	Emergency Stop	Field Ovr Cur Plus Various Control functions
Tail Rope Foul	Emergency Stop	Approx 3 Feet
Low Oil Level	Emergency Stop	Vendor Supplied
Hoist Motor Stall	Emergency Stop	10 Seconds (Note 2)
DC Control Power Grnd	Emergency Stop	Hard Ground
Regulator Malfunction	Emergency Stop	Various Control Functions
Overcurrent	Emergency Stop	240% of Normal
Field Loss	Emergency Stop	36 Amps (Or Less)
Overvoltage	Emergency Stop	625 Volts
Shaft Gate Opn Dur Trip	Emergency Stop	Gate Open
Car Permissive	Emergency Stop	Car Out of Position/Not Secured
Jammed Conveyance	Emergency Stop	Various Control Functions
Pwr Conv Emerg Fault	Emergency Stop	Vendor Supplied
Motor Overspeed	Emergency Stop	Vendor Supplied
Lilly Overspeed	Emergency Stop	Vendor Supplied
Radio Control Fault	Emergency Stop	Conveyance E Stop, Radio Comm Loss or Malfunction, Material Car Interlock Fault

Note 1 Only Functions if Pump Start Button Actuated.
Note 2 Zero Hoist Speed, with Current applied

Working Copy

6.0 OFF-NORMAL EVENTS AND RECOVERY **[All Shafts & Hoists, Refer to Chapter G]**

6.1 UH06 Waste Hoist

The WIPP Controlled Procedures Program provides procedures to address UH06 Waste Hoist abnormal conditions and recovery. The abnormal events covered by this procedure are:

- Waste Hoist drive motor failure
- Protection and mitigation
- Alarms that indicate the problem
- Recovery procedure
- Brake failure in the set position on the Waste Hoist
- Protection and mitigation
- Alarms that indicate the problem
- Recovery procedure
- Brake failure in the release position on the Waste Hoist
- Protection and mitigation
- Alarms that indicate the problem
- Recovery procedure

7.0 MAINTENANCE **[All Shafts & Hoists, Refer to Chapter G]**

7.1 Maintenance Approach **[All Shafts & Hoists, Refer to Chapter G]**

7.2 Corrective Maintenance **[All Shafts & Hoists, Refer to Chapter G]**

Corrective maintenance, preventative maintenance, in-service inspection and predictive maintenance procedures for the Waste Hoist (subsystem UH06) are available and are provided through the WIPP Site Controlled Procedure Program. The UH06 operations procedures apply to the following subsystem equipment and devices:

- Hoist Operators Console
- Series Six Console

Working Copy

- Annunciator Panel
- Field Power Hoist Breaker Panel
- Five Power Panels (Near Master Control Station)
- Five Types of Local Control Panels
- 600 HP DC Hoist Motor and Hoist Motor Cooling Fan-Motor
- Hoist Wheel
- Waste Hoist Deflection Sheaves
- Lilly Controller
- Speed Feedback Pulse Encoder
- Friction Wheel Bearings
- Hydraulic Brake System (Major Components)
- Conveyance
- Counterweight
- Catchgear Units
- Hoist Tower and Conveyance Structures
- Energy Absorbing Timbers
- Waste Hoist Rolling Beam Chairing Device
- Hoisting, Tail and Guide Ropes
- Jammed Conveyance and Tread Wear Detector
- 30-Ton Bridge Crane

Working Copy

7.2.2 UH07 Waste Shaft

For a shaft lining or keyway with cracks, bulges, evidence of water leakage, buildup of salt deposits, loose materials or protruding parts, the damaged component should be reworked according to good shop practice to restore to drawing and specification requirements or replaced as needed.

Damaged, broken or loose pipe hangers or cable supports should be reworked or replaced as needed.

Loose, damaged or excessively worn fixed guide rails, shaft steel, sump ladderway, guide rope cheeseweights, tail rope loops or dividers and timber balks should be reworked or replaced as needed.

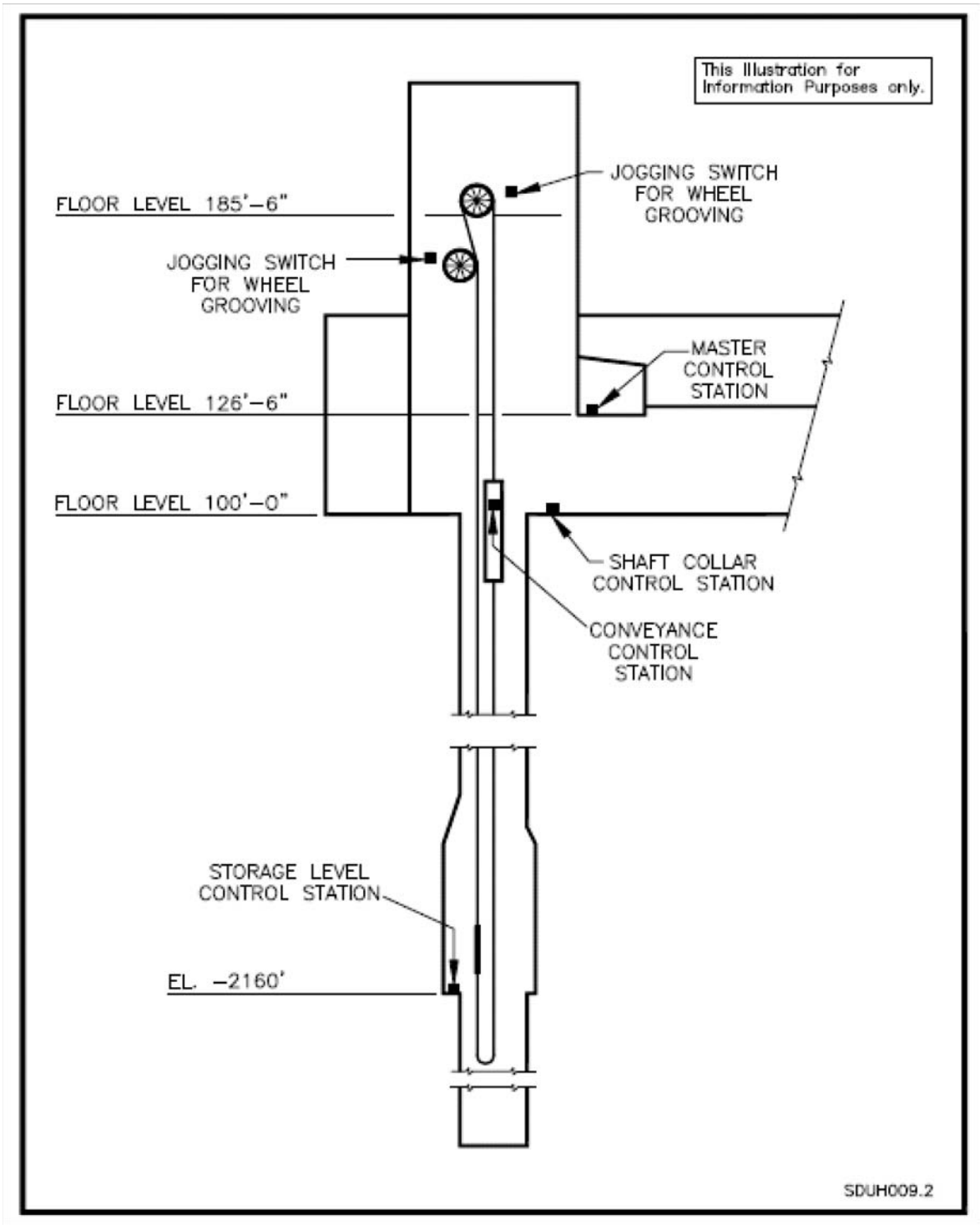

FIGURE UH III-1 Location of Waste Hoist Control Stations

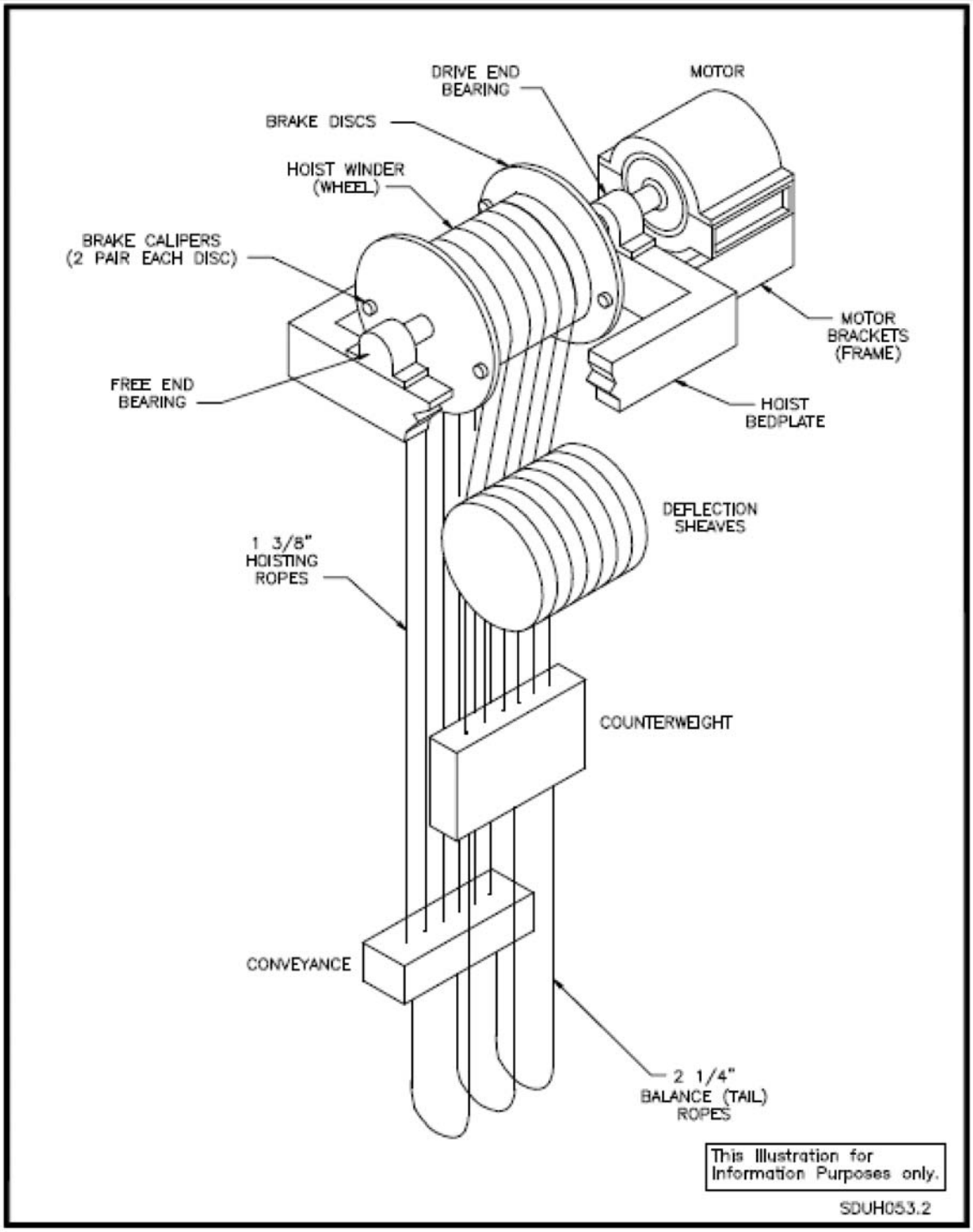

FIGURE UH III-2 Waste Hoist Drive System

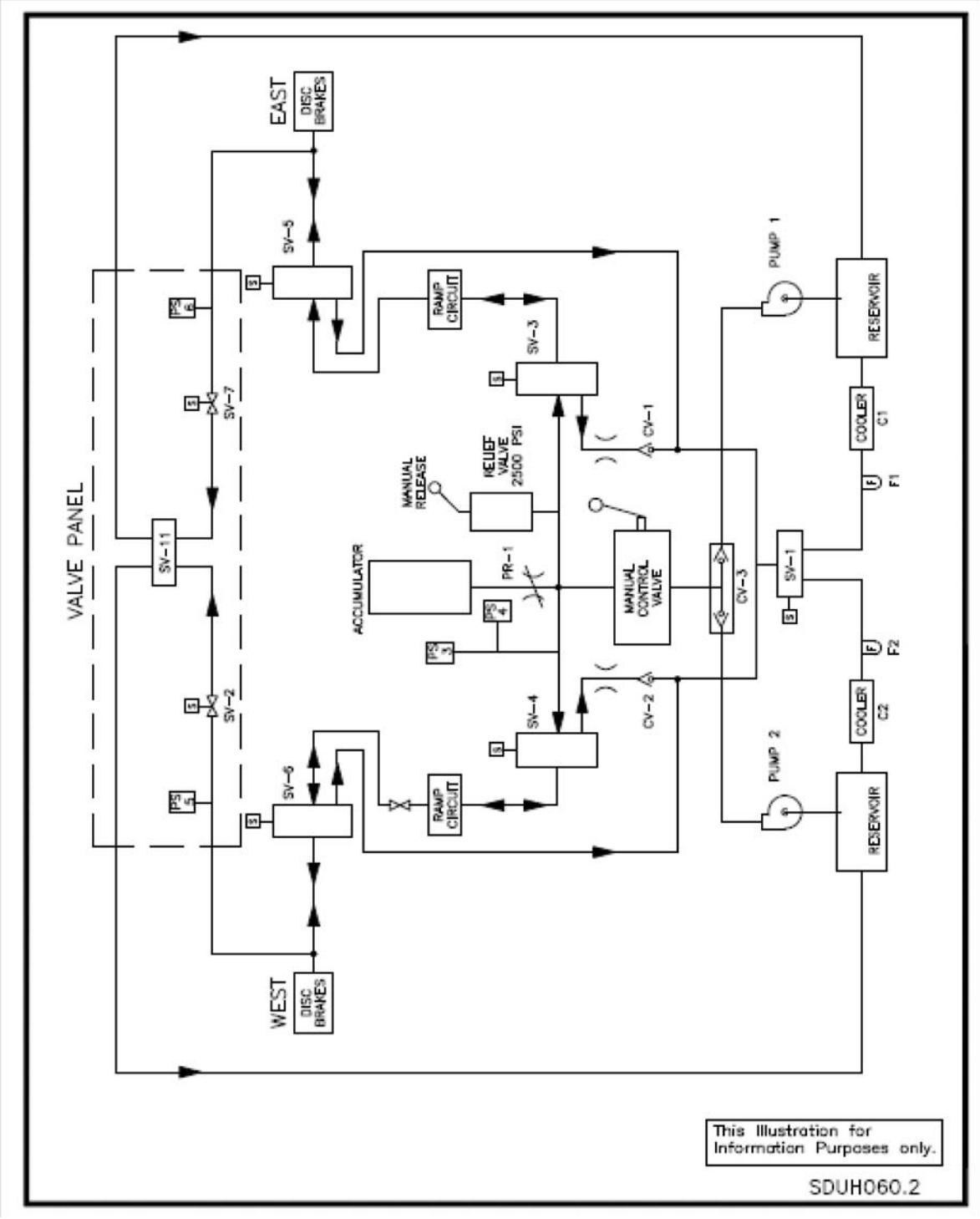

FIGURE UH III-3 Waste Hoist Simplified Brake Hydraulics

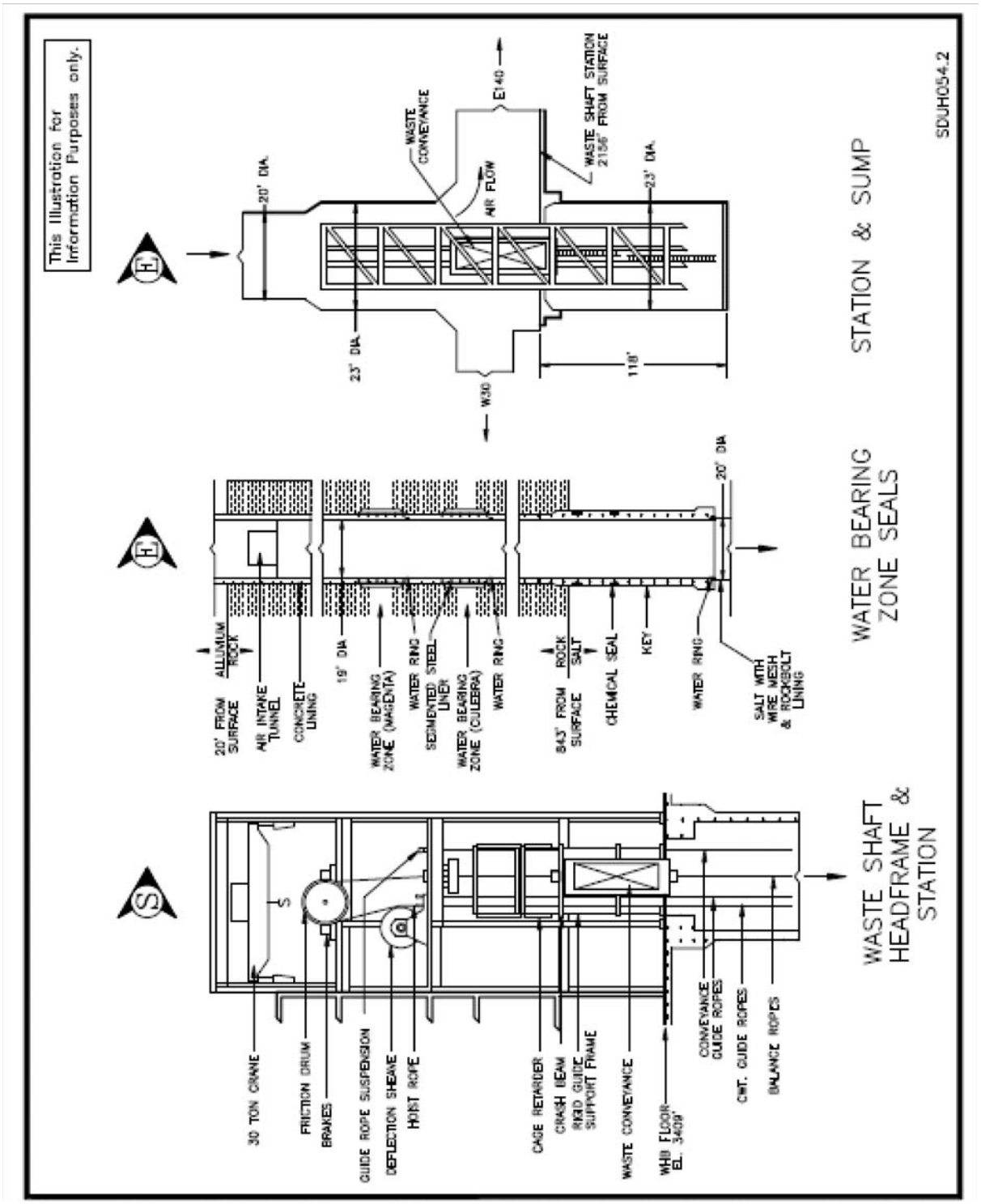

FIGURE UH III-4 Waste Shaft

Working Copy

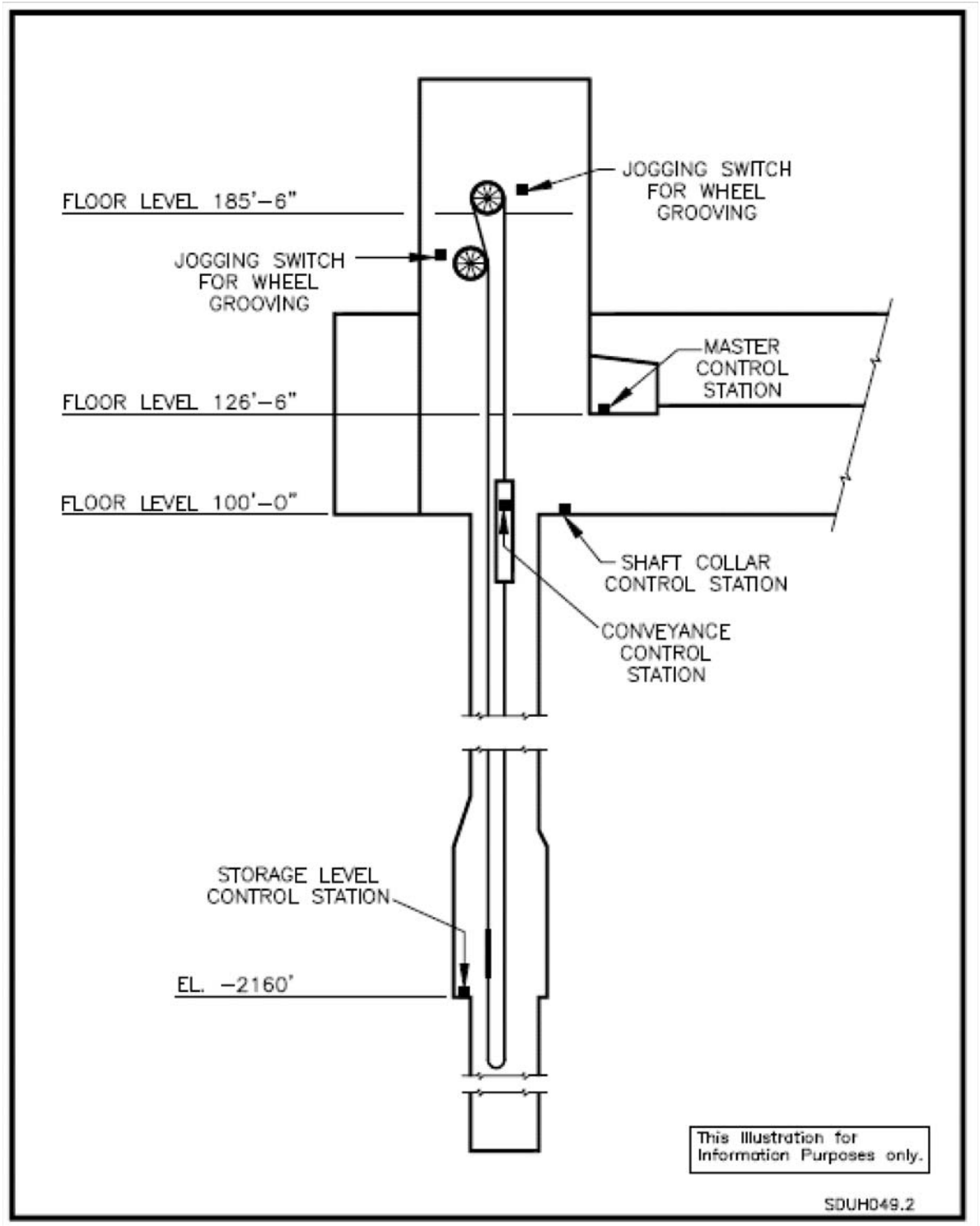

FIGURE UH III-5 Location of Waste Hoist Control Stations

Working Copy

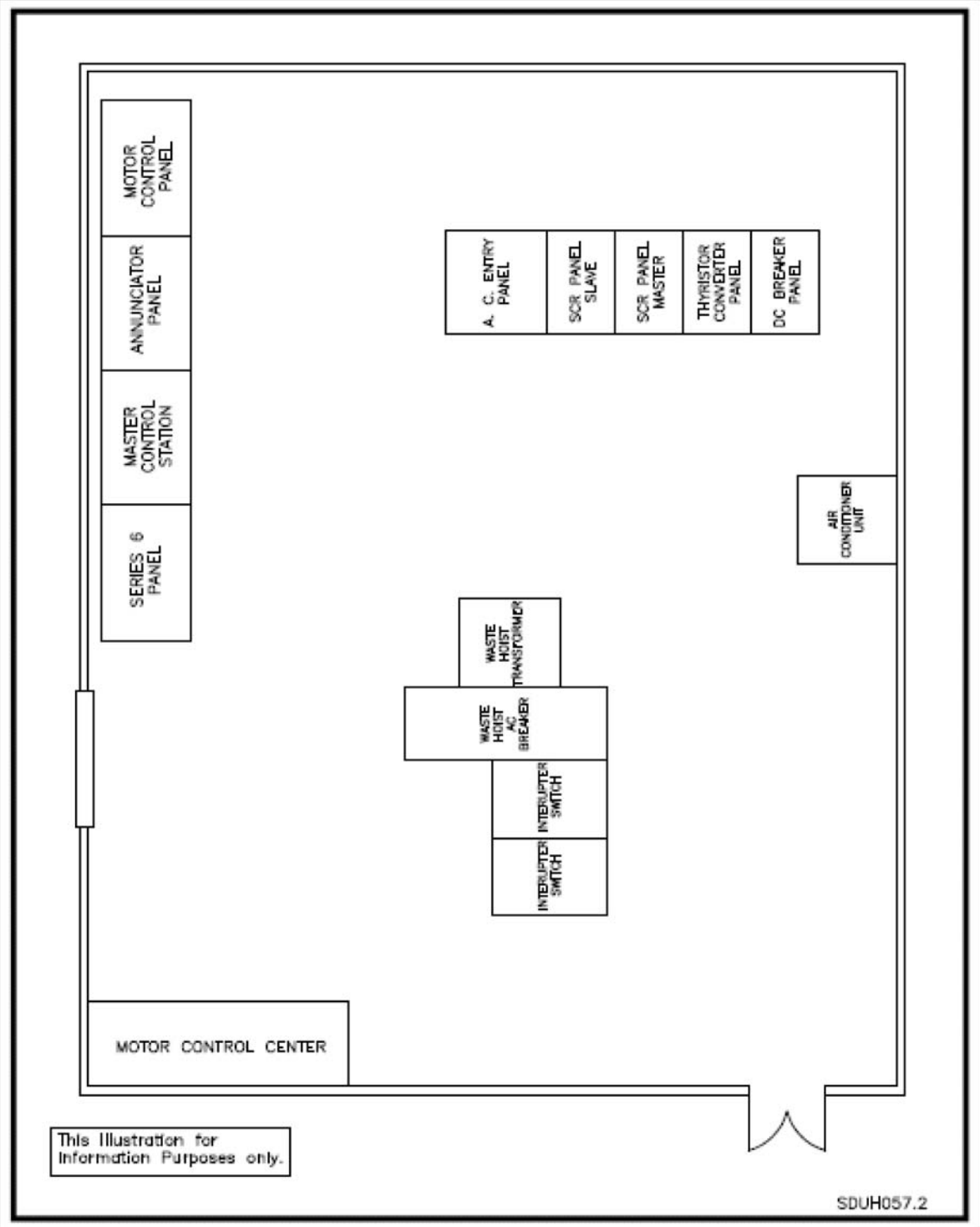

FIGURE UH III-6 Waste Hoist Control Room Arrangement

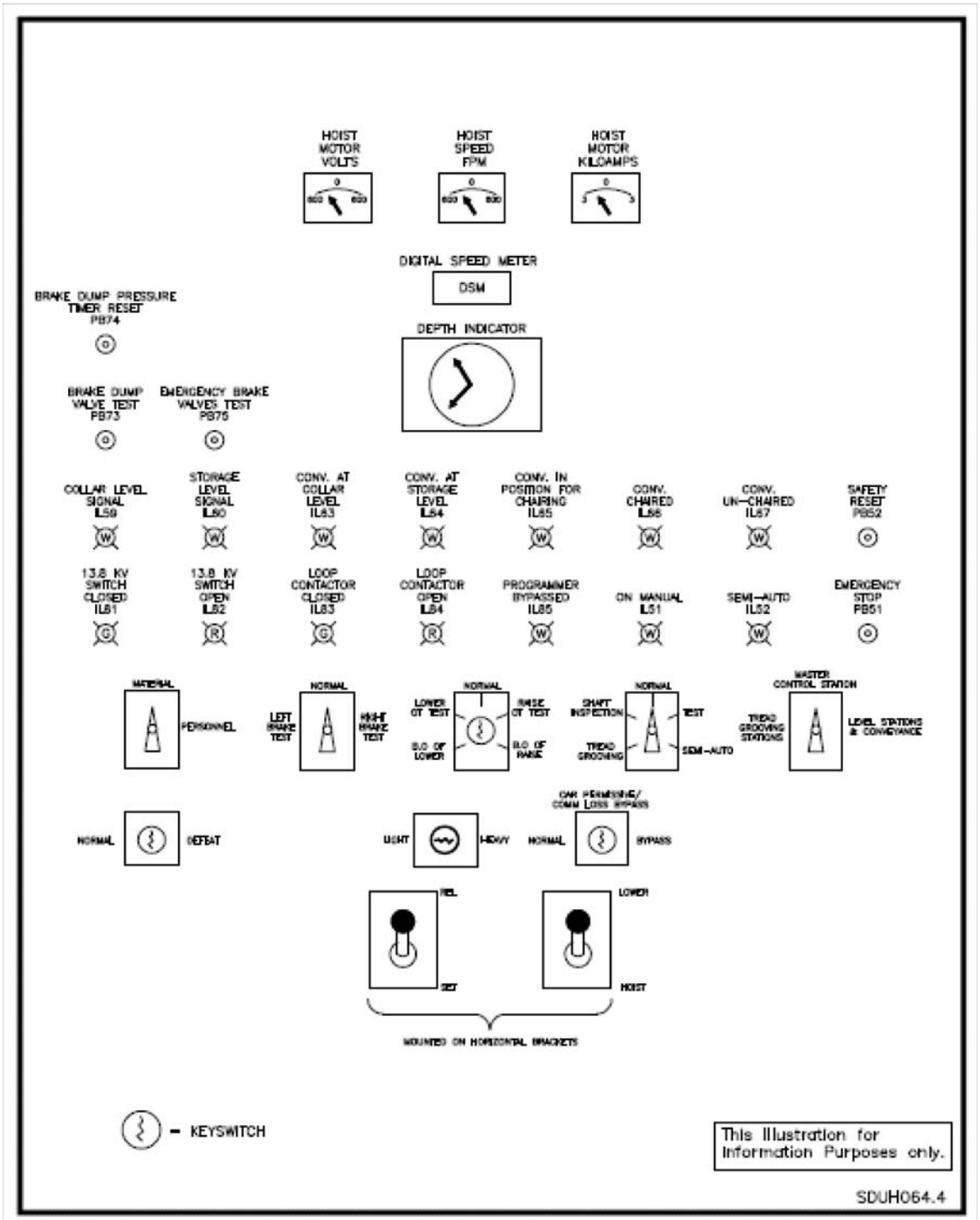

FIGURE UH III-7 Waste Hoist Master Control Console

Working Copy

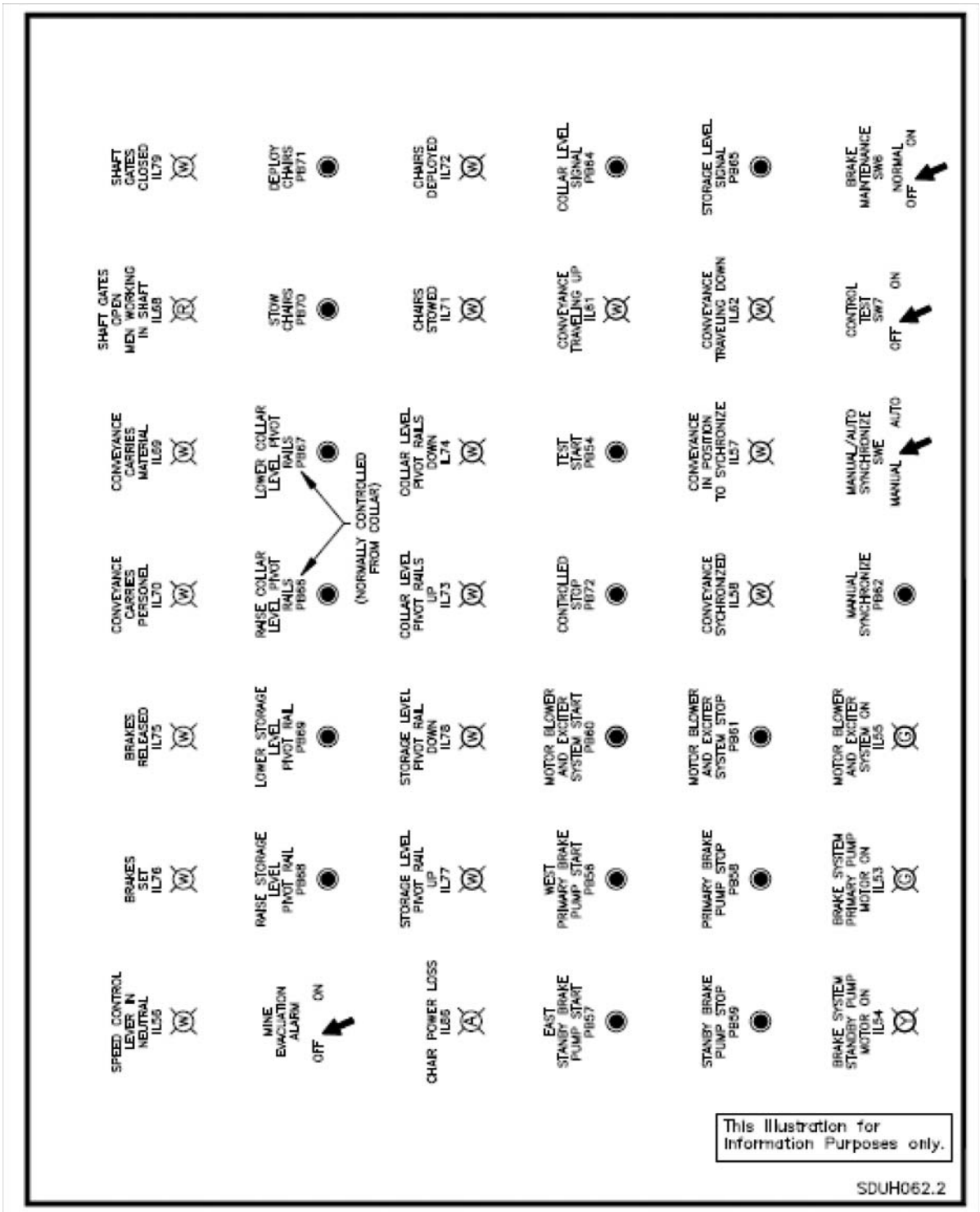

FIGURE UH III-8 Waste Hoist Series Six Panel

Working Copy

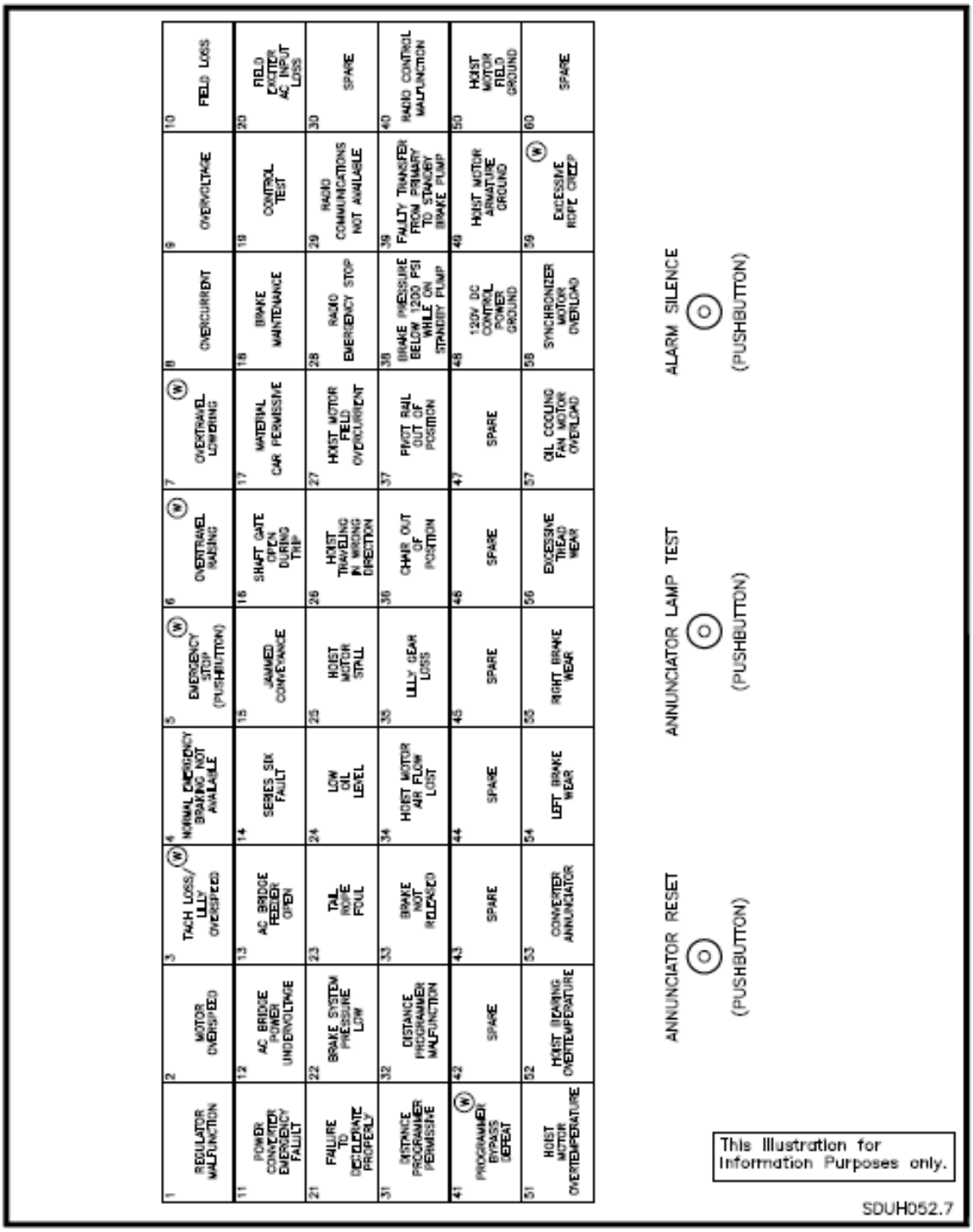

FIGURE UH III-9 Waste Hoist Annunciator Alarm Panel

Working Copy

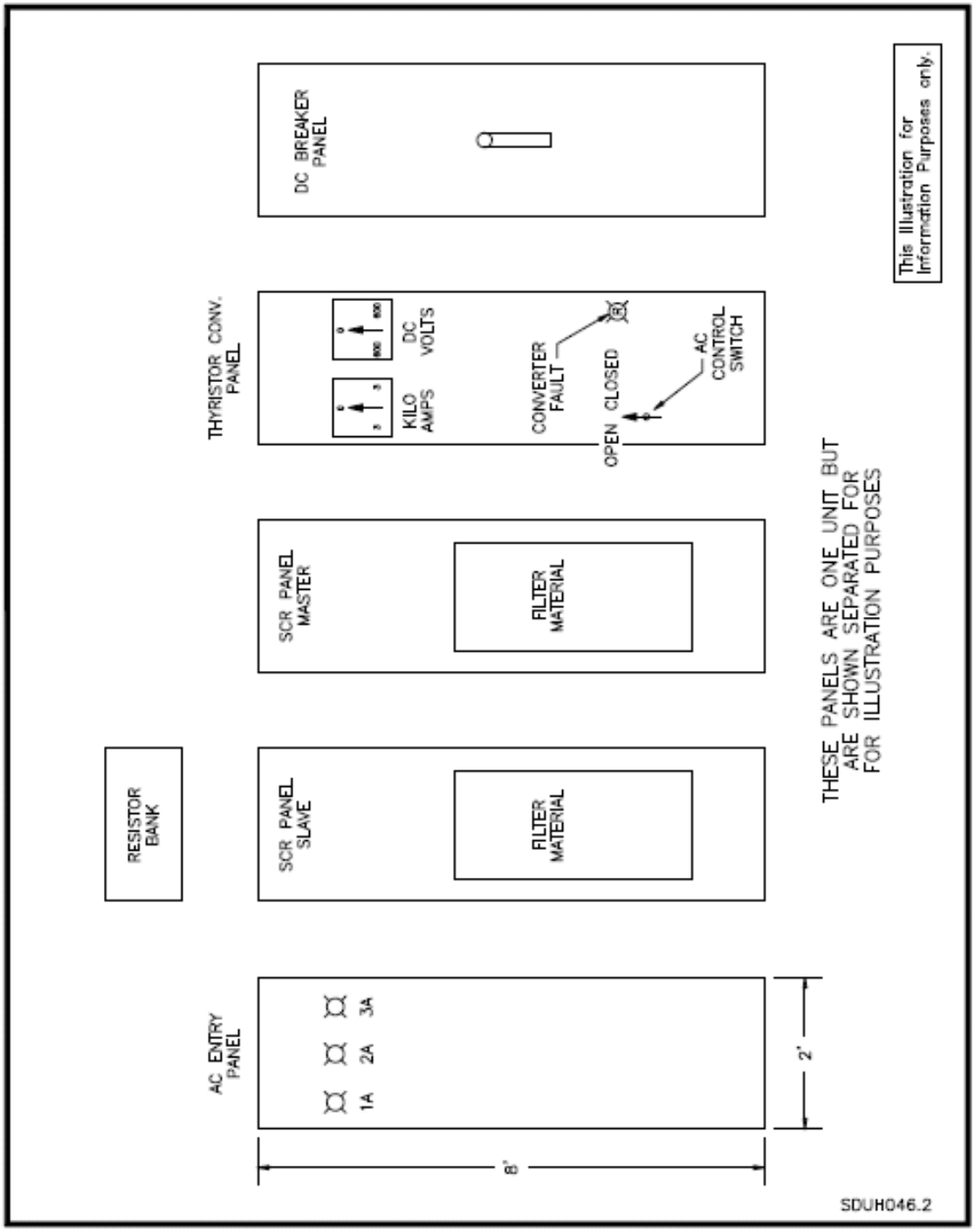

FIGURE UH III-10 Waste Hoist Power Supply Panels

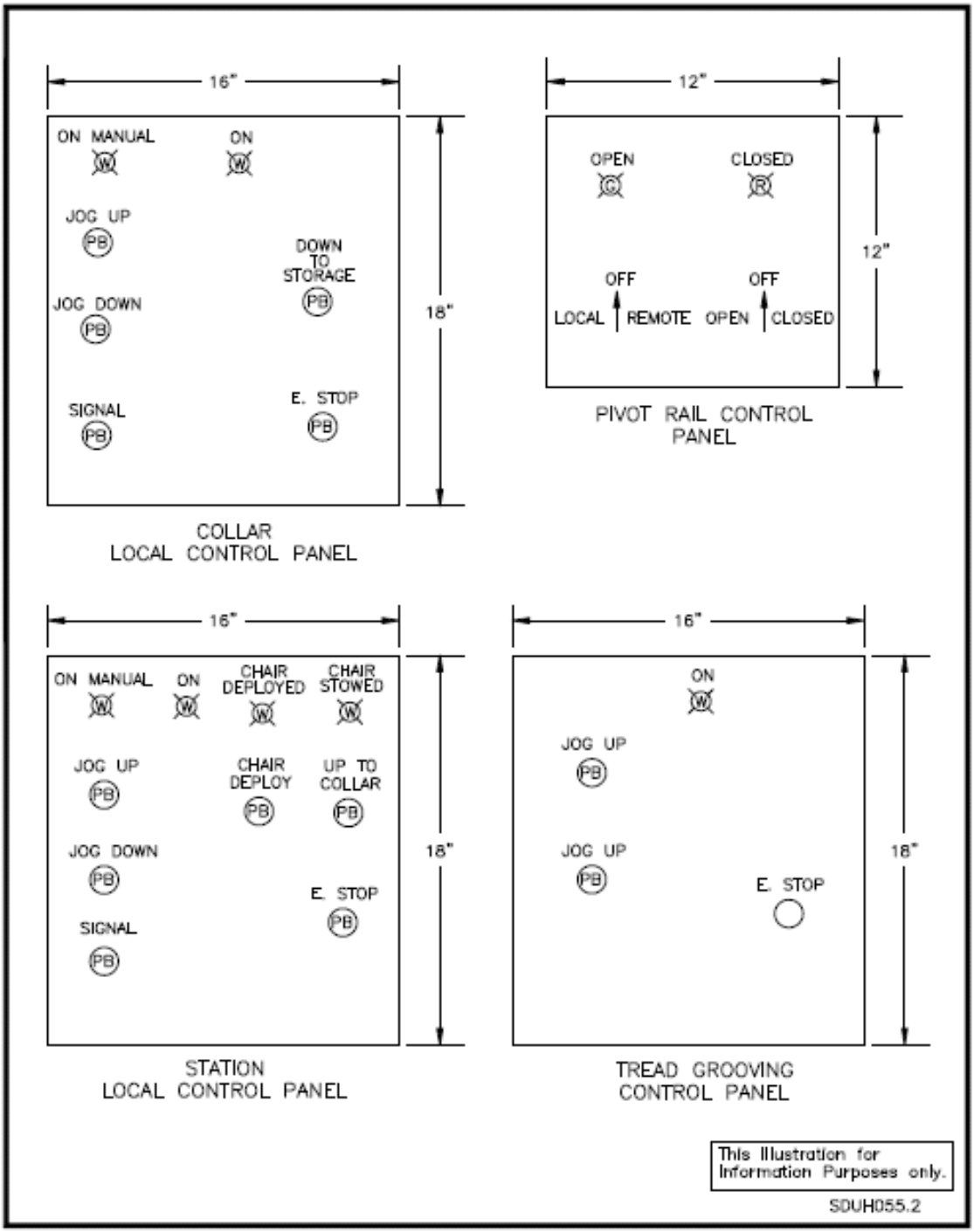

FIGURE UH III-11 Waste Hoist Local Control Panels

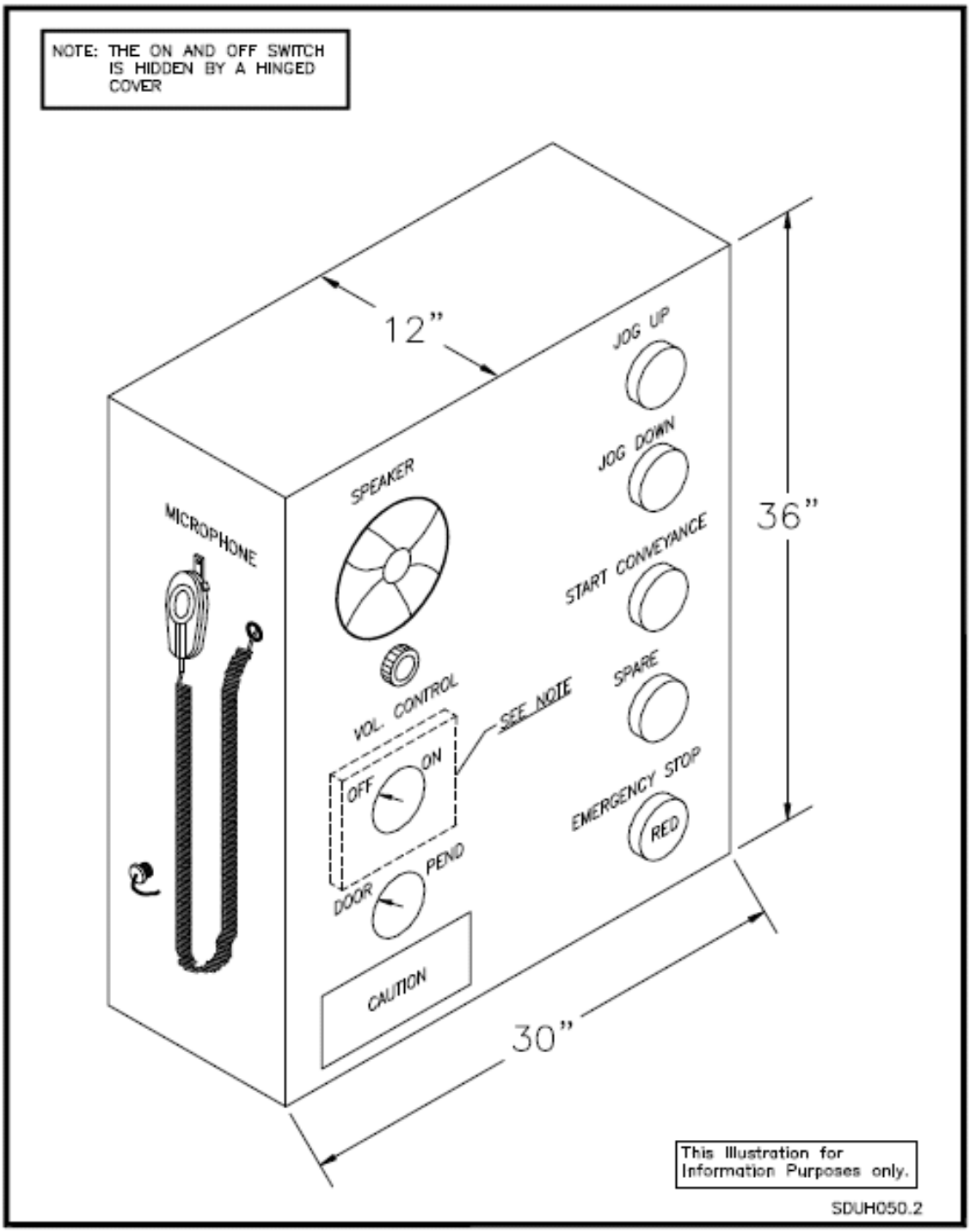

FIGURE UH III-12 On Board Waste Hoist Control Panel

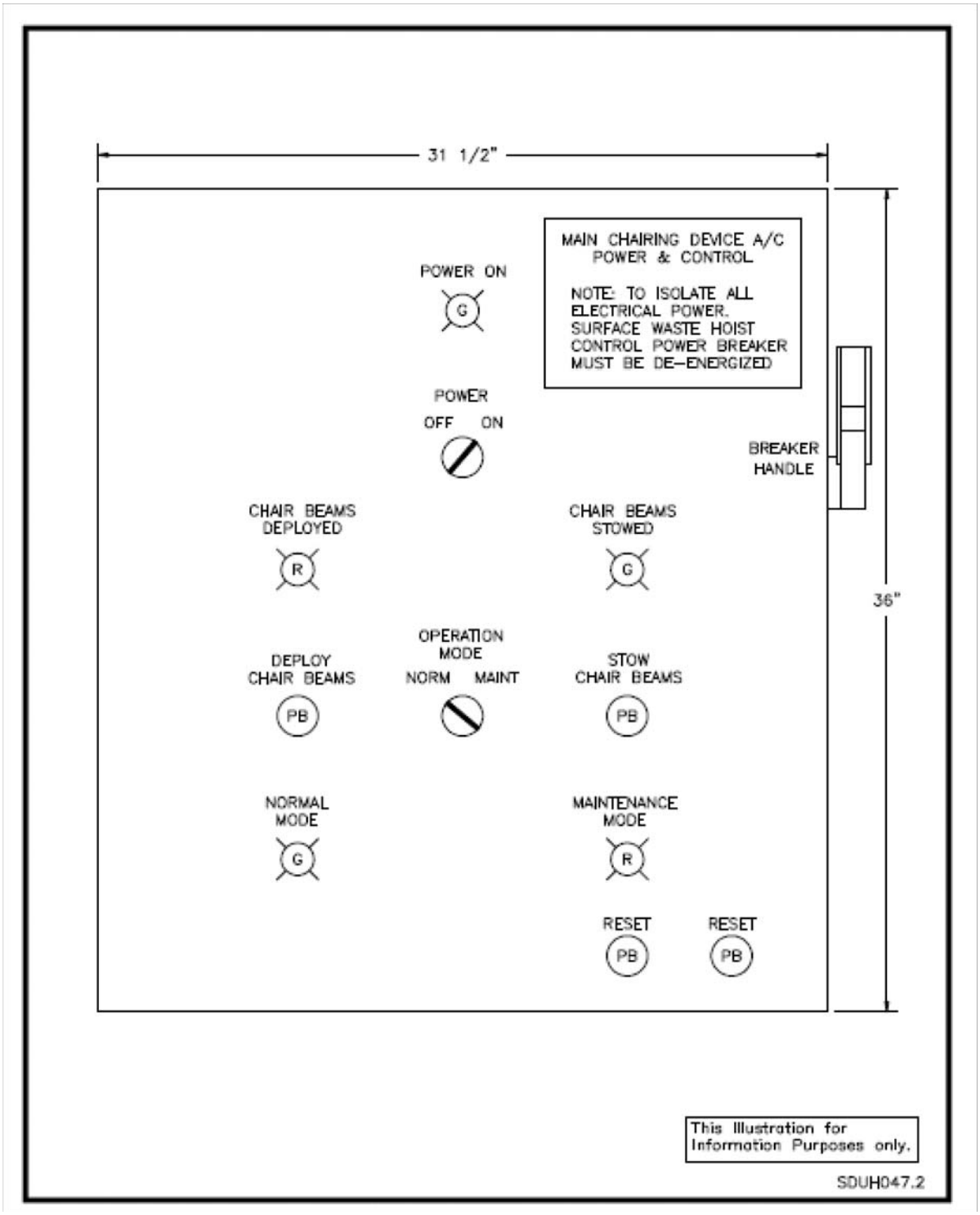

FIGURE UH III-13 Waste Hoist Chairing Device Control Panel

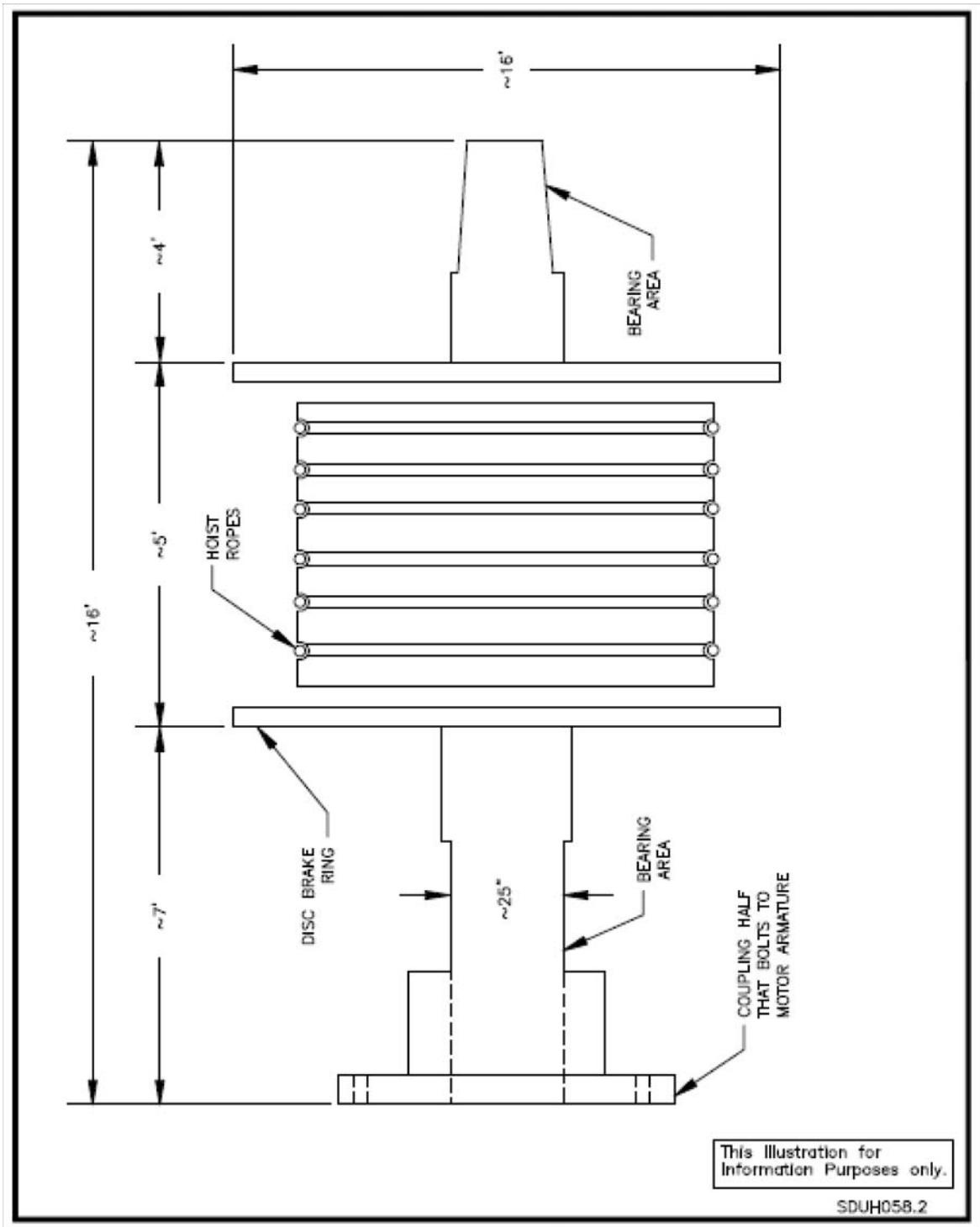

FIGURE UH III-14 Waste Hoist Friction Wheel

Working Copy

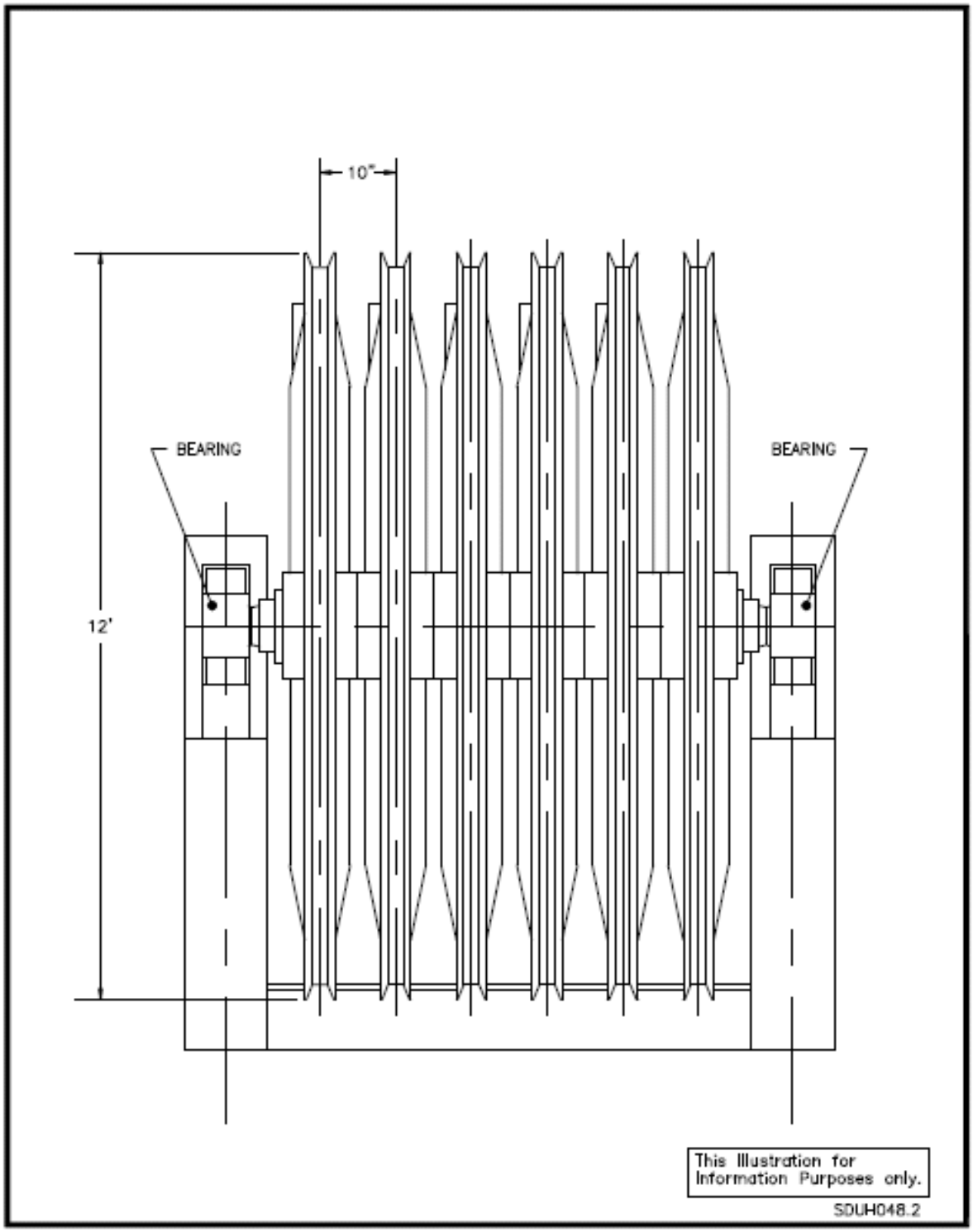

FIGURE UH III-15 Waste Hoist Deflection Sheaves

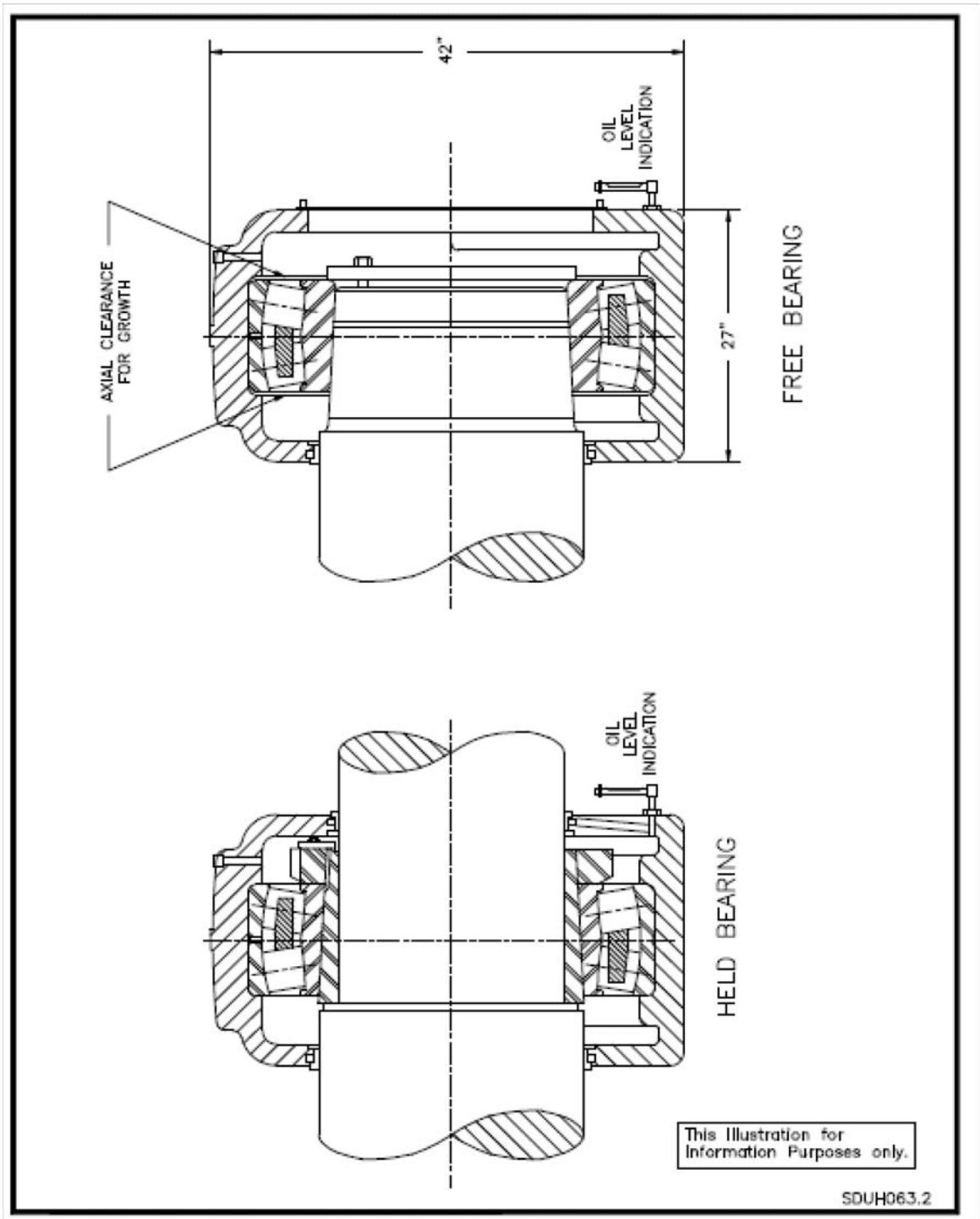

FIGURE UH III-16 Waste Hoist Friction Wheel Bearings

Working Copy

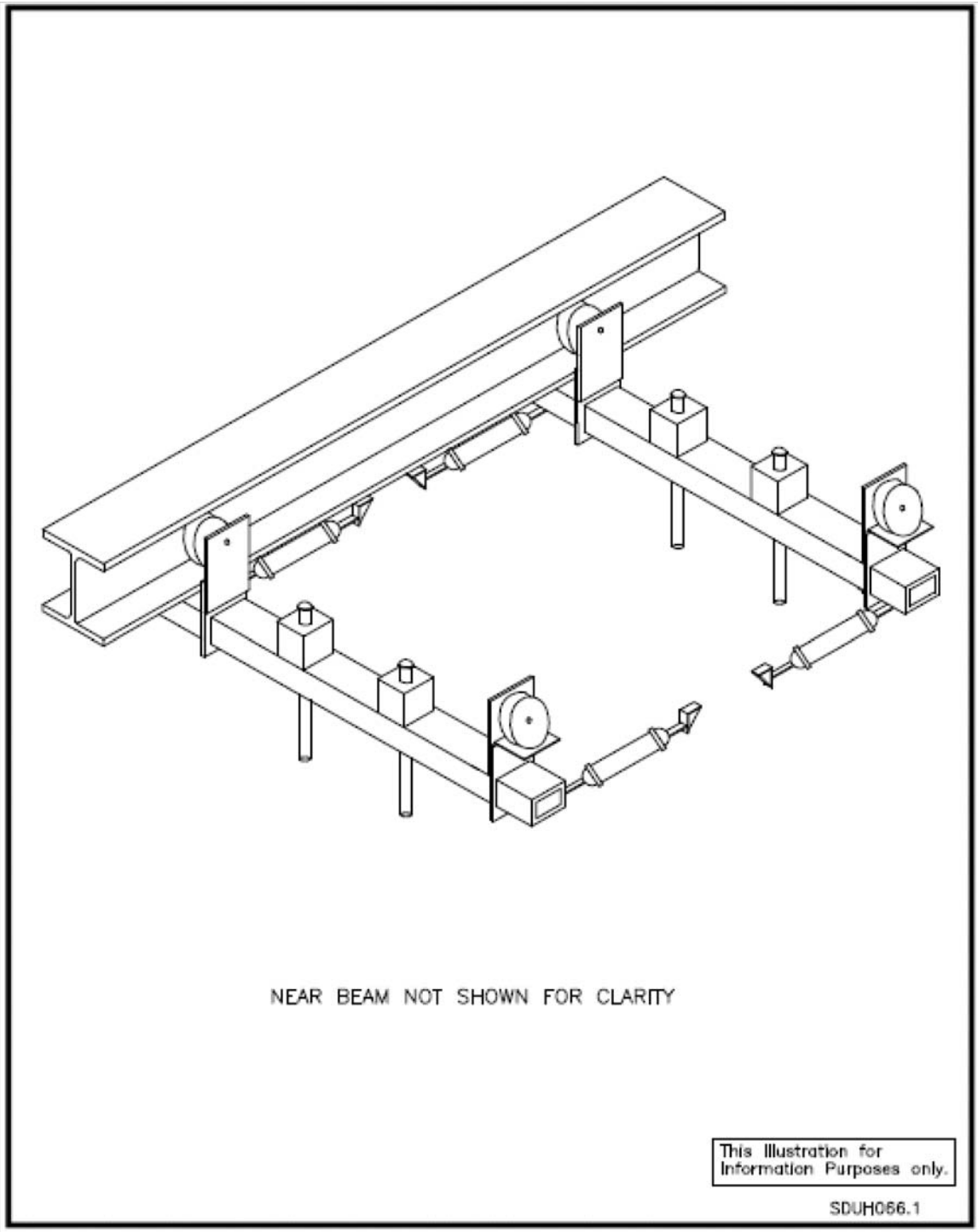

FIGURE UH III-17 Waste Hoist Chairing Device

Working Copy

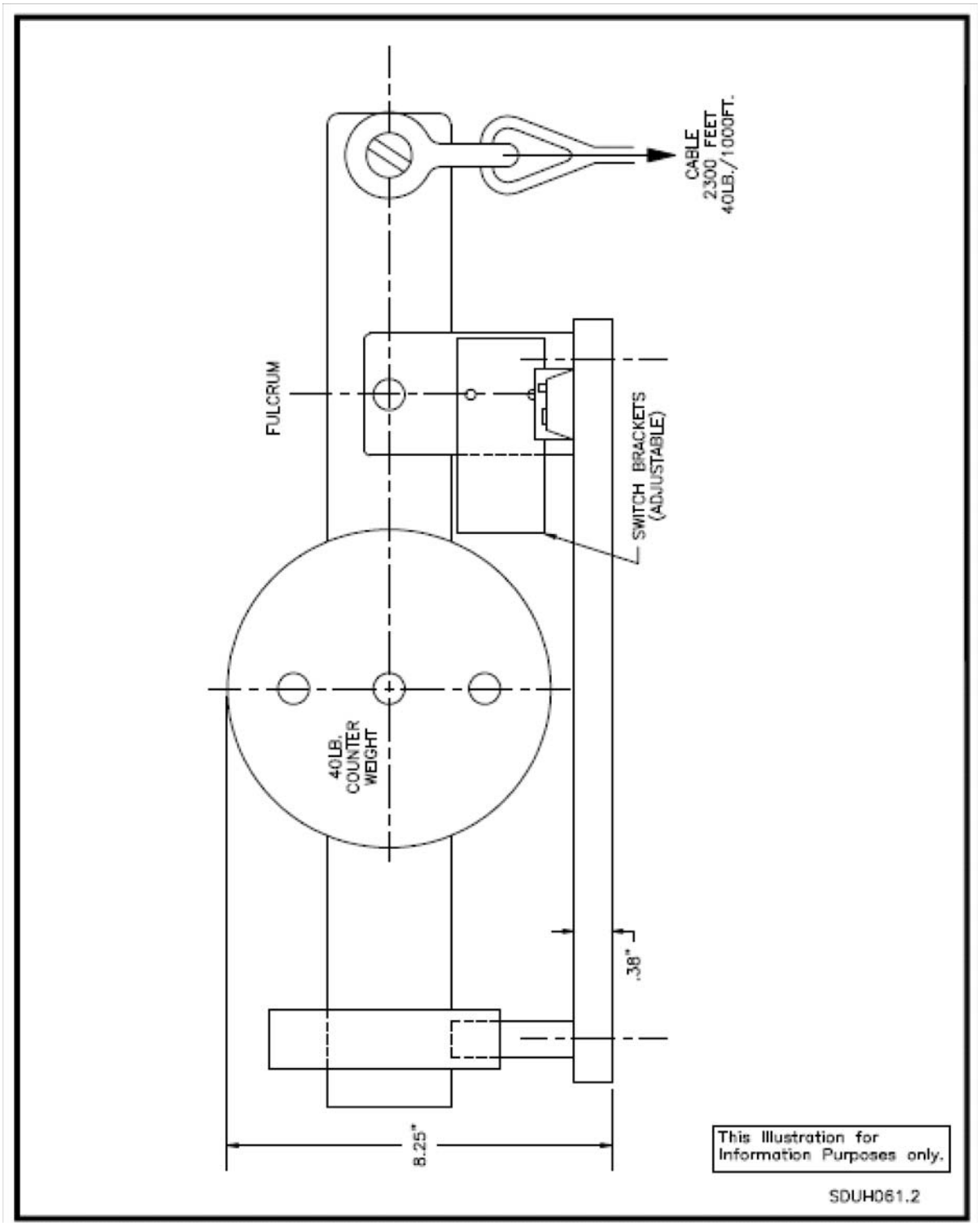

FIGURE UH III-18 Waste Hoist Pull Bob Switch

Working Copy

Chapter IV
Table of Contents

Subsystem UH08, Exhaust Shaft

1.0 PRIMARY FUNCTIONS IV-1

1.1 UH08 Exhaust Shaft IV-1

2.0 DESIGN REQUIREMENTS IV-1

2.1 General Requirements IV-1

2.2 Subsystem General Requirements IV-1

2.3 Operational Requirements IV-2

2.4 Structural Requirements IV-2

2.5 General Arrangements and Essential Features IV-2

2.6 Maintenance Requirements IV-2

2.7 In-Service Inspections IV-2

2.8 Instrumentation and Control Requirements IV-2

2.9 Interfacing System Requirements IV-3

2.10 Quality Assurance Requirements IV-3

2.11 Codes and Standards Requirements IV-3

2.12 Reliability Assurance Requirements IV-3

3.0 DESIGN DESCRIPTION IV-3

3.1 Summary IV-3

3.2 Detail System Description IV-3

3.3 System Performance Characteristics IV-4

3.4 Component Design Description IV-4

3.5 Instrumentation and Control Information IV-5

Working Copy

3.6 System Interfaces IV-5

4.0 OPERATIONS IV-6

5.0 SYSTEM LIMITATIONS, SETPOINTS AND PRECAUTIONS IV-6

6.0 OFF-NORMAL EVENTS AND RECOVERY IV-6

7.0 MAINTENANCE IV-6

7.1 Maintenance Approach IV-6

7.2 Corrective Maintenance IV-6

List of Figures

Figure Page

FIGURE UH IV-1 Exhaust Shaft IV-8

Working Copy

Chapter IV

Subsystem UH08, Exhaust Shaft

1.0 PRIMARY FUNCTIONS [**All Shafts & Hoists, Refer to Chapter G**)]

1.1 UH08 Exhaust Shaft

1.1.1 This subsystem provides a shaft which connects the Exhaust Elbow on the surface with the storage level approximately 2,160 feet below the surface. This shaft is used as a duct to remove air from the underground areas.

1.1.2 This subsystem provides a reinforced concrete collar to seal the top portion of the shaft down to the base rock.

1.1.3 This subsystem supports the underground ventilation system exhaust duct elbow at air monitoring station A.

1.1.4 This subsystem provides a location to mount instrumentation for measuring hydrostatic pressures behind the lining, salt pressure behind the key and radial convergence of the shaft.

1.1.5 This subsystem provides a route for compressed air, electrical power cables and instrumentation cables.

2.0 DESIGN REQUIREMENTS

2.1 General Requirements **[All Shafts & Hoists, Refer to Chapter G]**

2.2 Subsystem General Requirements **[All Shafts & Hoists, Refer to Chapter G]**

2.2.1 UH08 Exhaust Shaft Requirements

2.2.1.1 The inside shaft diameter of the concrete lined section shall be 14 feet. The portion of the shaft in the unlined section in the salt formation shall be 15 feet in diameter to allow for creep deformation of the salt.

2.2.1.2 The key shall extend approximately 56 feet below the rock and salt interface and into sound, competent salt.

2.2.1.3 The shaft lining shall extend above the general ground level to form a collar which will prevent water inflow into the shaft in the event of surface flooding.

2.2.1.4 The shaft collar shall support the exhaust plenum elbow which ducts exhaust air to either the atmosphere or to the Exhaust Filter Building.

Working Copy

2.2.1.5 The items attached to the shaft collar shall be designed so that they may be removed if required for emergency access or egress to or from the underground or for repair and maintenance of the shaft walls or water collection rings.

2.2.1.6 The components of the shaft lining consist of the unreinforced concrete shaft lining and the reinforced concrete shaft key.

2.2.1.7 At least two water collector rings shall be provided; one located below each of the major water tables. Water from between these rings shall be collected and discharged.

2.2.1.8 That portion of the shaft below the shaft key shall be lined with wire mesh and/or rock bolts as required for safety.

2.2.1.9 All construction and non-construction materials within the shaft shall not support combustion.

2.2.1.10 A means shall be provided to inspect the entire shaft, including furnishings, on a periodic basis to detect cracking, corrosion, deterioration, and water intrusion.

2.2.1.11 Water from the collector rings shall be piped to the bottom of the shaft.

2.2.1.12 For personnel safety at the storage level, a fence shall be provided across the shaft access entry. A manually operated gate shall be provided to control access.

2.2.1.13 The shaft utility lines shall include a 4" compressed air line, a 13.8 kV electrical feeder cable, and instrumentation cables.

2.3 Operational Requirements **[All Shafts & Hoists, Refer to Chapter G]**

2.4 Structural Requirements **[All Shafts & Hoists, Refer to Chapter G]**

2.5 General Arrangements and Essential Features **[All Shafts & Hoists, Refer to Chapter G]**

2.6 Maintenance Requirements **[All Shaft & Hoists]**

2.7 In-Service Inspections **[All Shafts & Hoists, Refer to Chapter G]**

2.8 Instrumentation and Control Requirements **[All Shafts & Hoists, Refer to Chapter G]**

Working Copy

2.8.1 UH08 Exhaust Shaft

The Exhaust shaft proper has no instrumentation or control requirements. There are geomechanical instruments located in the shaft that are used as information gathering devices. These are not directly control instruments and are referenced in the interface Section 2.9.

2.9 Interfacing System Requirements **[All Shafts & Hoists, Refer to Chapter G]**

2.10 Quality Assurance Requirements **[All Shafts & Hoists, Refer to Chapter G]**

2.11 Codes and Standards Requirements **[All Shafts & Hoists, Refer to Chapter G]**

2.12 Reliability Assurance Requirements **[All Shafts & Hoists, Refer to Chapter G]**

3.0 DESIGN DESCRIPTION

3.1 Summary **[All Shafts & Hoists, Refer to Chapter G]**

3.2 Detail System Description **[All Shafts & Hoists, Refer to Chapter G]**

3.2.1 UH08 The Exhaust Shaft System Description

3.2.1.1 The Exhaust Shaft System extends from the surface to the underground facility for the main purpose of carrying exhaust air for the underground ventilation system. The upper part is unreinforced concrete to maintain the shaft integrity in the water bearing areas of the shaft. (See Figure UH IV-1)

3.2.1.2 The shaft collar supports the exhaust elbow.

3.2.1.3 The shaft is equipped with experimentation and data acquisition devices which include those for measuring shaft closure, near field hydrologic properties, testing and monitoring of permeability, and brine inflow.

3.2.1.4 Water rings are installed in the shaft liner for collection of the shaft water seepage.

Working Copy

3.2.1.5 Tell tale pipes are installed to collect leakage which drains down the face of the key to the water ring at the bottom of the key. Water from the water ring is collected via a 2 inch line that is installed from the key to the storage level of the shaft.

3.2.1.6 Chemical seal rings are installed behind the key to prevent leakage from above into the salt level.

3.3 System Performance Characteristics **[All Shafts & Hoists, Refer to Chapter G]**

3.3.1 UH08 Exhaust Shaft

3.3.1.1 The performance characteristics of the Exhaust Shaft are primarily related to air flow that supports the ventilation system. Flow rates under various flow conditions are described in VU00.

3.3.2 UH08 Exhaust Shaft System Arrangement

The Exhaust Shaft (Figure UH IV-1) varies in diameter, and in the outer wall covering as shown on the referenced figure.

3.4 Component Design Description **[All Shafts & Hoists, Refer to Chapter G]**

3.4.1 UH08 Exhaust Shaft Component Design Description

3.4.1.1 The shaft is lined with nonreinforced concrete to the bedded salt interface, approximately 837 feet below the surface. At the liner bottom a reinforced concrete key exists, which extends into the shaft wall. Below the key from the salt/rock interface downward the shaft is unlined and unsupported. Some portions of the unlined shaft are covered with bolted mesh to control surface scaling.

3.4.1.2 Water collection rings are installed in the concrete liner, one each beneath the Magenta and Culebra Dolomites and one at the base of the key. The three rings are drained by a 2 inch diameter pipe which extends to the storage level.

3.4.1.3 Two chemical seal rings formed chemicals are installed on the outside diameter of the key area to prevent leakage of ground water past the key.

3.4.1.4 The concrete liner varies in thickness from 10 inches to 16 inches, from the collar to the top of the key.

Working Copy

3.5 Instrumentation and Control Information **[All Shafts & Hoists, Refer to Chapter G]**

3.5.1 UH08 I & C Information for the Exhaust Shaft System

There is no I & C equipment associated with this subsystem.

3.6 System Interfaces **[All Shafts & Hoists, Refer to Chapter G]**

3.6.1 UH08 Exhaust Shaft

3.6.1.1 There are no primary interface systems associated with the Exhaust Shaft system. The shaft system does not require the services of any other system.

3.6.1.2 The Exhaust Shaft system provides services to the compressed Air System CA00, the electrical distribution system ED00, the environmental monitoring system EM00, the radiation monitoring system RM00, and the Underground Ventilation System VU00.

3.6.1.2.1 CA00

The Exhaust shaft provides the path and support base for a 4 inch airline and its supports. This airline is presently not used.

3.6.1.2.2 ED00

The Exhaust shaft provides the path and support base and supports for power lines required to supply 13.8 kV power to the underground.

3.6.1.2.3 EM00

The Exhaust Shaft provides the path and support base and supports for the instrument cables needed for the geomechanical experiments being conducted in the shaft.

3.6.1.2.4 VU00

The Exhaust Shaft provides the path for exhaust air from the underground to enable the VU00 system to perform its function.

3.6.1.2.5 RM00

The Exhaust Shaft provides the guides for the air sampling probe for Station A.

Working Copy

4.0 OPERATIONS **[All Shafts & Hoists, Refer to Chapter G]**

No operating requirements for the exhaust shaft.

5.0 SYSTEM LIMITATIONS, SETPOINTS AND PRECAUTIONS **[All Shafts & Hoists, Refer to Chapter G]**

No system limitations, setpoints, or precautions for the exhaust shaft.

6.0 OFF-NORMAL EVENTS AND RECOVERY **[All Shafts & Hoists, Refer to Chapter G]**

No off-normal events or recovery requirements for the exhaust shaft.

7.0 MAINTENANCE **[All Shafts & Hoists, Refer to Chapter G]**

7.1 Maintenance Approach **[All Shafts & Hoists, Refer to Chapter G]**

7.2 Corrective Maintenance **[All Shafts & Hoists, Refer to Chapter G]**

In-service inspection procedure for the Exhaust Shaft (subsystem UH08) is provided in the WIPP Controlled Procedure program. The Exhaust Shaft equipment and devices which are inspected by remote camera are:

- 13.8 kV feeder on west wall — 0'-Brow
- 4 inch air line on east wall — 0'-Brow
- 2 inch water line on east wall — 0'-933'
- Instrumentation cables located on the north wall — 0'-Brow
- Guide pipe supporting brackets — 30'-34' & 43'-45'
- East, west & south radiation probes & north air velocity tube — 59'-60'
- Magenta aquifer and water ring — 630'-665'
- Culebra aquifer — 745'-780'
- Key and water ring — 875'-940'

- Tell-tale pipes 890'-920'
- Concrete-salt interface 938'-940'

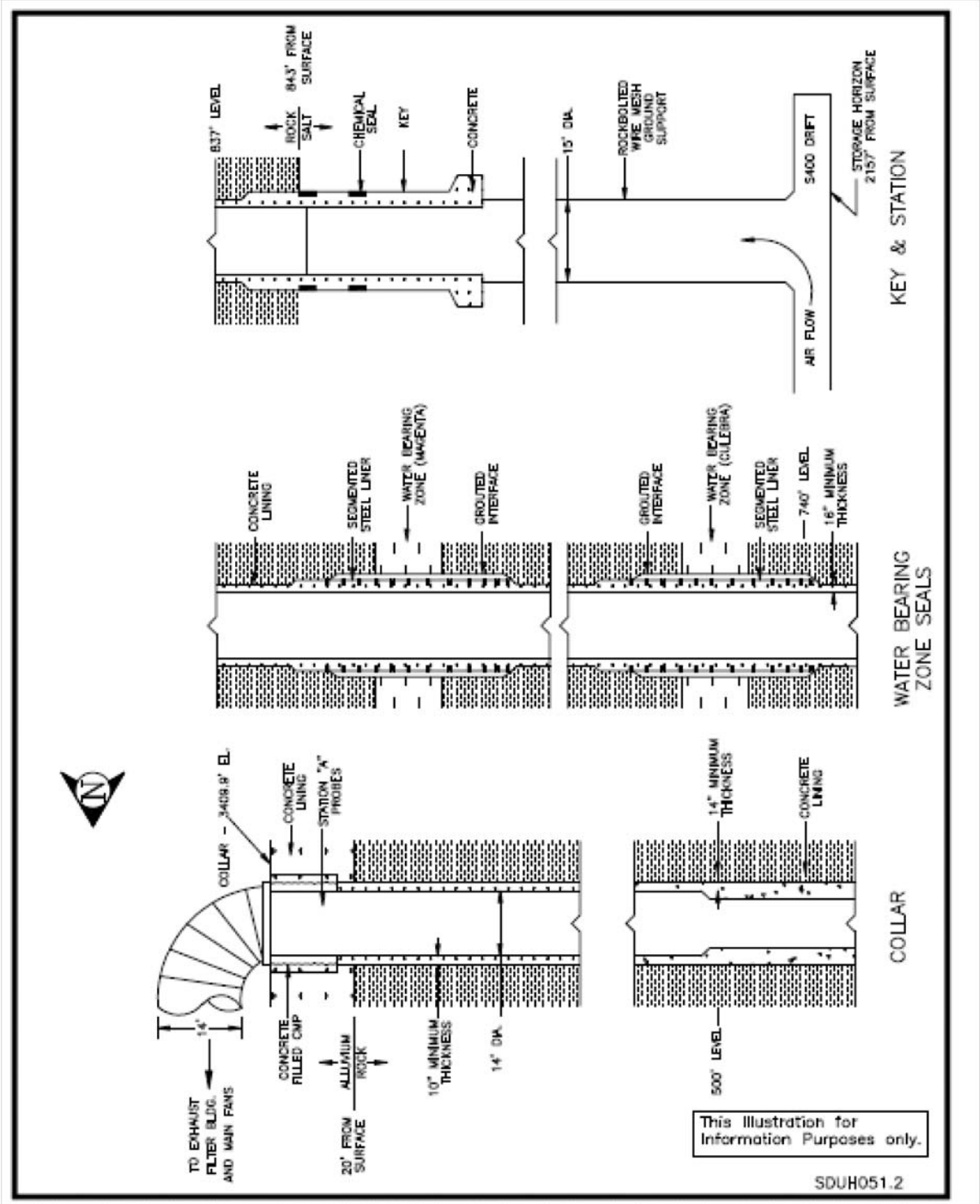

FIGURE UH IV-1 Exhaust Shaft

Chapter V
Table of Contents

Appendices

APPENDIX A - REFERENCES V-1

APPENDIX B - DEFINITIONS V-2

APPENDIX C - EQUIPMENT LIST V-4

APPENDIX E - LIST OF SDD'S V-6

APPENDIX F-1 - PRIMARY INTERFACE LIST V-7

APPENDIX F-2 - SECONDARY INTERFACE LIST V-9

Working Copy

Chapter VI

APPENDIX A - REFERENCES

1. Soils Design Report. DR-22-V-01.

2. Geological Design Information Report. DR-22-V-03.

3. Seismic Evaluation Report of Underground Facilities, 76D510AA-000.

4. Geological Characterization Report, Waste Isolation Pilot Plant (WIPP) Site, Southeastern New Mexico, Vol. II, Aug. 1978 (SNL), Table No. 6.3-6.

5. Creep Analysis - Exploratory Shaft Key, CS-76-D-104.

6. Design Validation Final Report, dated October 1986.

7. Development of emergency escape systems guidelines for underground metal and non metal mines. May 1976 USGS/OFR 13477

Working Copy

APPENDIX B - DEFINITIONS

Aquifer: A water bearing geological stratum.

Buntons: Horizonal support framing fastened to the shaft walls and spaced over the length of the shaft to support the skip guides, service piping and cables.

Cage: Conveyance used to carry personnel and materials.

Chairing Device: A device located at the storage level station that prevents movement of the conveyance, due to rope stretch, during loading and unloading.

Collar: Top of the shaft at the surface.

Conveyance: A cage, skip, skip cage combination that is attached to the hoist ropes and lifted and lowered by them.

Counterweight: A dead weight used to off set the live load in a conveyance, usually equal to the weight of the conveyance plus one half of the weight of the load.

Creep: Long-term irreversible deformation under constant load.

Crosshead: Top frame of the conveyance to which the hoist rope fastenings attach and which transmits tension load from the conveyance stiles.

Dump Station: The point above the surface in the headframe where the skip discharges its payload.

Friction Hoist: A hoist that uses friction between the rope or ropes and the drums or wheel to drive the ropes.

Guide: A rigid rail or a rope that restricts horizontal sway of the conveyance and counterweight, maintaining clearance between the conveyance and the shaft wall.

Headframe: Structural framework over the top of the shaft that supports the headsheave.

Loading Pocket: The point just below the underground storage level where the skip is loaded from a measuring hopper.

Manual Operation: Full manual control of the conveyance from the master control station. The manually controlled speed and acceleration profile is limited by control circuits

Platform: The structure which forms the floor of the conveyance and which directly supports the payload and tail ropes.

Rope Factor of Safety: Breaking strength of the hoist rope divided by the applied load.

Working Copy

Semiautomatic Operation: A hoist operating mode in which the hoist speed and acceleration/deceleration profile are automatically controlled during the entire length of travel between the departing and the arriving hoist station. Each trip of the conveyance shall be initiated manually by a signal from a push button.

Shaft Collar: The uppermost structural component of the shaft which serves to support the exhaust duct elbow leading to the Exhaust Filter Building, to retain adjacent soil and to prevent surface runoff from entering the shaft.

Shaft Key: A concrete ring, reinforced for temperature and shrinkage effects, keyed into the salt and rock formation at the bottom of the concrete lining.

Shaft Lining: The permanent lining that serves to retain the penetrated geological formations and prevent water seepage into the shaft.

Shaft Loading: Loads imposed upon the shaft wall which must be considered in the design of the shaft lining.

Single Drum Hoist (unbalanced): A hoist that has one end of the rope attached to the drums and uses the drum for the transfer of force and rope storage.

Skip: Container used to carry material with some means of dumping as part of the design.

Skip Semi-Automatic Operation: A hoist operation mode in which each trip of a skip from the loading pocket to the dump station is initiated by an attendant either at the loading pocket floor or at the storage level station.

Soil: The upper mantle of soil overlaying the bedrock.

Station: Hoist landing at the surface and at the underground storage level.

Stiles: The main exterior frame uprights of the conveyance which transfer the tension load from the platform to the conveyance crosshead.

Sump: That portion of the waste shaft continuing downward below the storage level.

Tower: The enclosed structural framework over the top of the shaft that supports the headwheel and hoist drive.

Water Collector Ring: A steel gutter within the shaft for collecting seepage.

Water Sealing Ring: A chemical seal ring, placed at the aquifer zones and at the shaft key, interfacing the concrete and a sound geologic stratum to prevent downward or upward water migration behind the key.

Working Copy

APPENDIX C - EQUIPMENT LIST

Refer to the Equipment Register maintained in the Engineering File Room.

APPENDIX D - ENGINEERING DRAWINGS

The Drawing Register lists all drawings by system designator and indicates the current status.

Working Copy

APPENDIX E - LIST OF SDD'S

SDD No.	Title
AU00	Underground Facility and Equipment
CA00	Compressed Air System
CF00	Plant Buildings, Facilities, and Miscellaneous Equipment
CM00	Plant Monitoring and Communications System
ED00	Electrical System (Surface and Underground)
EM00	Environmental and Process Monitoring System
FP00	Fire Protection System
HV00	Heating, Ventilation and Air Conditioning System
PP00	Plant Protection System
PT00	Packaging and Transportation System
RM00	Radiation Monitoring System
UH00	Underground Hoist System
VU00	Underground Ventilation System
WD00	Water Distribution System
WH00	Waste Handling System

Plant Design Requirement Document

GPDD	General Plant Design Description

Working Copy

APPENDIX F-1 - PRIMARY INTERFACE LIST

System Providing Service	Service to be Provided	Control Document	Responsibility For Control Document
AU00	Provides the rock bolts for support of equipment and protective screening in all Shafts.	None	Not Applicable
CA01	Provides compressed air for the brakes systems for the AIS Galloway, AIS Shaft, and Salt Hoist.	None	Not Applicable
	Provides compressed air to Operate Collar Doors on the AIS and Salt Shaft.	None	Not Applicable
	Provides compressed air to the Lilly Controller on the Waste Hoist.	None	Not Applicable
CF00	Provide Sheltered Space for Hoist Houses and Control Rms.	None	Not Applicable
	Provide Mounting support for the Waste Hoist Srvc Crane.	None	Not Applicable
CM00	Provide Communication Equipment for operations and maintenance of the Hoists.	None	Not Applicable
	Provide Remote display, recording and alarm of Hoist Control and operation.	71-X-002-W	Technical Computer Systems.
	Provide Electrical Signals Inter-faces for receiving data.	71-X-002-W	Technical Computer Systems.

Working Copy

ED00	Provide 480 Volt ± 10%, 60 Hz ± 3.5%, 3 Phase Power to the Salt Hoist, the AIS Hoist and Shaft, and the Waste Hoist.	None	Not Applicable
	Provide 2400 Volt ± 10%, 60 Hz ±3.5%, 3 Phase Power to the Salt Hoist.	None	Not Applicable
	Provide backup Diesel Power for the AIS shaft Hoist.	None	Not Applicable
HV00	Provide heating and cooling for the hoist control rooms.	None	Not Applicable
	Provide cooling for the control equipment in the Salt and Waste Hoist control rooms.	None	Not Applicable
	Provide cooling for the Waste Hoist Drive Motor.	None	Not Applicable
VU00	Provide ventilation to the shafts and underground stations.	None	Not Applicable
	Provide Exhaust duct mounted on the Collar of the Exhaust Shaft.	None	Not Applicable

Working Copy

APPENDIX F-2 - SECONDARY INTERFACE LIST

System Requiring Service	Service to be Provided by UH00	Control Document	Responsibility For Control Document
CA00	Provide the shafts that are the paths for the compressed air to the Underground.	None	Not Applicable
EM00/EU02	Provide the shaft mounting locations for the geomechanical instruments.	None	Not Applicable
	Provide the transportation to obtain manual shaft readings.	None	Not Applicable
HV00	Provide a flow path for downcast air to the Waste Handling Shaft which can be utilized by System HV00 for the normal ventilation of the Waste Hoist Tower.	None	Not Applicable
VU00	Provide the intake and exhaust shafts for the Ventilation Sys.	None	Not Applicable
WH00	Provide the Hoist, Conveyance and the Shafts for the movement of waste.	None	Not Applicable