Working Copy

SDD:	RM00
Revision Number:	16
Revision Date:	05/19/10

U.S. DEPARTMENT OF ENERGY
WASTE ISOLATION PILOT PLANT

RADIATION MONITORING (RM00)

SYSTEM DESIGN DESCRIPTION (SDD)

SDD RM00

Prepared by
Washington TRU Solutions LLC
Carlsbad, New Mexico

For

U. S. Department of Energy

Cognizant Engineer:	David Squires	05/08/10
	Approved for Use	Date
Cognizant Manager:	Jennifer Hendrickson	05/16/10
	Approved for Use	Date

TABLE OF CONTENTS

RADIATION MONITORING (RM00)
SYSTEM DESIGN DESCRIPTION (SDD)

Chapter		Tab
RM00	General Requirements	G. RM00
RM01	Continuous Air Monitors	I. RM01
RM02	Fixed Air Samplers	II. RM02
RM03	Area Radiation Monitors	III. RM03
RM04	Portable Radiation Monitoring (PRM)	IV. RM04
PV00	Plant Vacuum System	VI. PV00
RM05	RH Continuous Air Monitors	VII. RM05
Appendices		VIII. Appendices

LIST OF FIGURES

Figure Page

Figure S-1-0, Radiation Monitoring System..... 2

CHANGE HISTORY

REV. NO.	REV. DATE	PAGES/SECTIONS AFFECTED	APPROVED BY
0	6/91	Sections 1.0, 2.0, & 3.3	ECP 1-RM91-028 ECO No. 5575
1	6/92	Sections 1.0, 2.0, 3.0, 3.3, 4.0, 5.0,6.0, 7.0 & APP.	ECP 1-RM91-028 ECO No. 6297 ECP 1-PV92-094 ECO No. 6244
1	9/92	Pages 2-12, 2-19, 2-49 & 2-62	ECP 1-RM92-022 ECO No. 6608 ECO No. 6354
2	9/95	All Sections	ECP 2-EM93-089 ECO No. 7021 ECP 2-EM93-179 ECO No. 7023 ECP 1-RM92-180 ECO No. 6531 ECO No. 6532 ECO No. 6533 ECP 1-RM92-004 ECO No. 6748 ECP 2-EM93-008 ECO No. 6759 ECP 1-EM94-056 ECO No. 7274 ECP 1-GP95-049 ECO No. 7717 ECP 2-EM95-005 ECO No. 7683 ECP 2-GC95-055 ECO No. 7785 ECO No. 7901

REV. NO.	REV. DATE	PAGES/SECTIONS AFFECTED	APPROVED BY
3	8/97	All Sections	ECO No. 6759 Addendum #1 ECP 1-EM95-087 ECO No. 8009 ECP 2-EM95-103 ECO No. 8038 ECP 1-RM96-021 ECO No. 8260 ECO No. 8285 ECO No. 8419 ECO No. 8460 Addendums 1-4 ECP 1-RM97-025 ECO No. 8593 ECP 1-PV97-050 ECO No. 8606 ECP 1-RM97-068 ECO No. 8670
4	10/98	All Sections	ECP 1-RM97-052 ECO No. 8810 ECP 1-GP97-109 ECO No. 8864 ECP 1-GP97-111 ECO No. 8907 ECO No. 8912 ECP 1-RM98-016 ECO No. 9193
5	07/01	Sections I, II, & IV Section VII, Appendix F-2 Table G-2, Section VII, Appendix G Sections I, V, and Section VII, Appendix A Sections VI, and G Sections V, G, Table G-3 Section VII, Appendix F-1 Section VII, Appendix F-1 Section VI Section V Section II, Figure RMII-4 Sections II, III, IV Section II, Figures RMII-2, RMII-3 All Sections - Format Changes	ECO No. 9568 ECO No. 9804 ECO No. 9667 ECO No. 9243 ECO No. 9279 ECO No. 9049 ECO No. 9463 ECO No. 9516 ECO No. 9862 - A1 ECO No. 9383 ECO No. 9462 ECO No. 8810

REV. NO.	REV. DATE	PAGES/SECTIONS AFFECTED	APPROVED BY
6	06/13/02	Sections G, and VI Appendix F-2 Section VII, Appendix F-1 Appendix A Section G, Section V, Section VII, Appendix A Figure RM V-2 Appendix F-2	ECP No. 1-PV01-007 ECP No. 1-CA99-014 ECO No. 9862 A2 ECO No.10,208 ECO No. 9516 ECO No. 10,281 ECO No. 10070 ECO No. 10,046 ECO No. 10,213
7	12/17/02	Section V, Figure RM V-1, Figure RM-V2 Section G, and Tables G-1, G-2, G-3 Section I Figures RMI-1, RMI-2, and RMI-3 Section III Figures RMIII-2, RMIII-3, RMIII-4, RMIII-5, RMIII-6 Section VII, Appendix B, Appendix F-1, Appendix F-2, Appendix F-3, Appendix G Section V Figure RM V-4 Section I Table RM 1-1 Section III Section G, Section I, Section III Appendix F-2	ECO No. 10,186 ECO 9810, Add. 12 ECO 10392 ECO 9810, Add. 14 ECO 9810, Add. 15 ECO 10460
8	10/08/03	Section G Section V Section VII, Appendix F-1 Section V Section G Section I Section IV Section V Section VII	ECO 10267 ECO 10267, Add. 2 ECO 10267, Add. 3
9	02/17/04	Section I: 3.5.1.8.1 Section VII: Appendix F-2	ECO 10725 ECO 10498
10	10/29/04	Chapter G, Section 3.7.1.3 Chapter VI, Sections 2.4.1, 3.6.3, 3.6.5, and Table RM VI-1	ECO 11093

REV. NO.	REV. DATE	PAGES/SECTIONS AFFECTED	APPROVED BY
11	1/20/06	Chapter G, Sections 2.0, 2.1.4.6, 2.4 , 2.4.1, 2.4.10, 2.10, Chapter I 2.3.2, Chapter VI Section 2.4.1	ECO 11320
12	05/02/06	Extensive changes to Chapter V and resulting changes to General Section.	ECO 11374
13	06/27/07	Generation of chapter VII separating CH CAMs (Ch 1) and RH Cams (Ch VII) major impact, changes to ARMs, U/G CAMs and resulting changes to other SDD sections.	ECO 11029 ECO 11367 ECO 11368 ECO 11158
14	08/15/07	Chapter V, Section 3.0, Appendix G Figure S-1 Chapter G, Chapter IV, Appendix B	ECO 11479 ECO 11831
15	02/16/10	Remove EM01, Radiation Effluent Monitoring System (REMS), and Chapter V from this SDD, including references in Summary, Figure S-1-0, and Chapter G. Now in SDD EM00.	ECO 12495
16	05/19/10	Chapter G 3.7.1.1 RM00.1 Section 2, Section 3, Section 5 Figure RM1-1 Figure RM2 deleted RM00.VII Appendix F-1	ECO 11777

SUMMARY

The Radiation Monitoring System (RMS) at WIPP provides radiation detection, measurement and alarm capability to ensure protection for the environment, public, and workers. The RMS includes the following subsystems:

- RM01, CH Continuous Air Monitors (CAMs)
- RM02, Fixed Air Samplers (FASs)
- RM03, Area Radiation Monitors (ARMs)
- RM04, Portable Radiation Monitoring (PRM)
- PV00, Plant Vacuum System (PVS)
- RM05, RH Continuous Air Monitors

The Radiation Chemistry/Dosimetry Laboratory design requirements are also included.

The RM00 SDD information is organized in subsystem-specific chapters and is structured as illustrated on Figure S-1-0, RM00, and Radiation Monitoring System

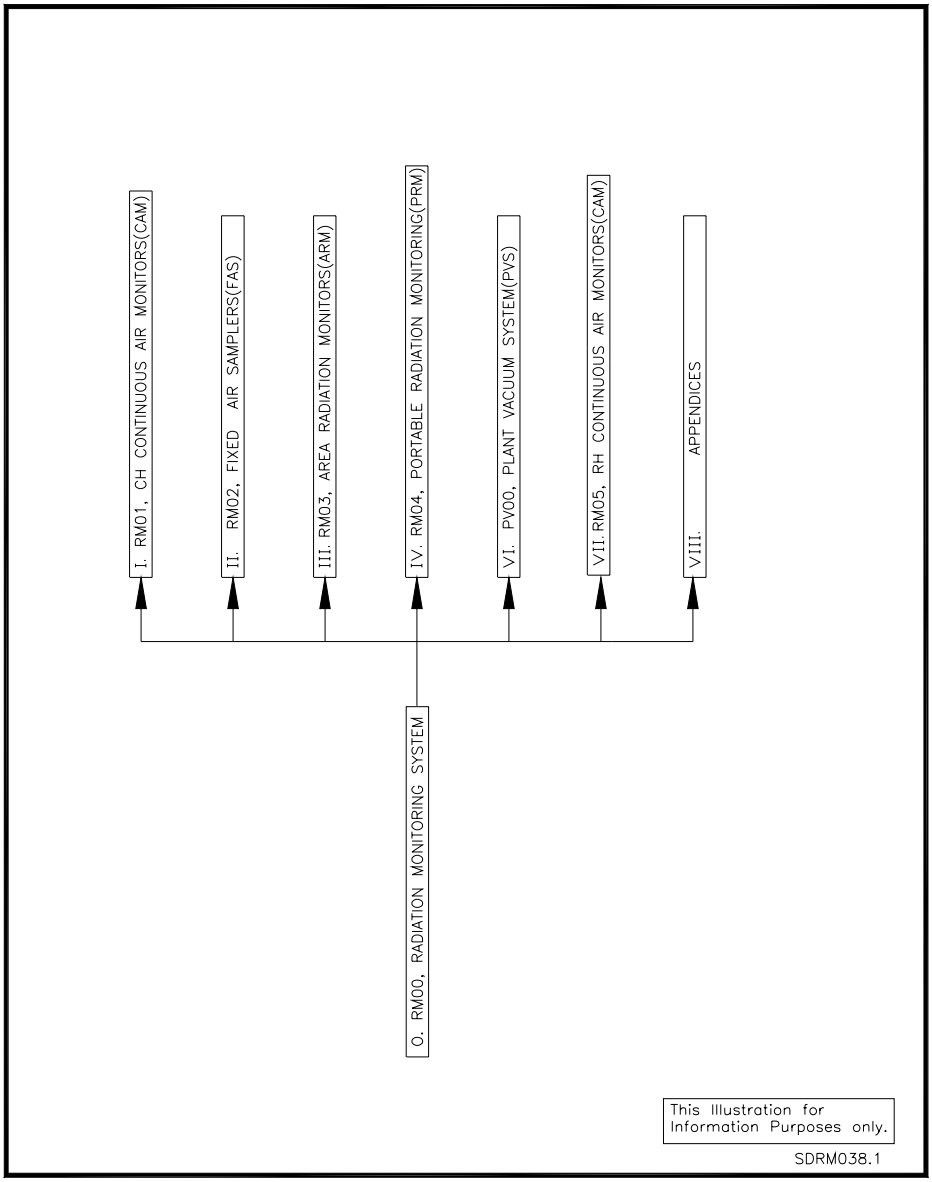

FIGURE S-1-0 Radiation Monitoring System
S-2

Figure S-1-0, Radiation Monitoring System

Chapter G
SDD RM00 General Requirement Chapter

Table of Contents

System RM00, Radiation Monitoring General Design and Performance Requirements

1.0 PRIMARY FUNCTIONS 1
1.1 General Function 1
1.2 Protecting the Public 1
1.3 Protecting the Environment 1
1.4 Protecting the Occupational Worker 1
1.5 Functions of the RMS 2
2.0 DESIGN REQUIREMENTS 4
2.1 General Design Requirements 4
2.2 Subsystem General Requirements 8
2.3 Operational Requirements 8
2.4 Structural Requirement for the RMS 8
2.5 General arrangement and Essential Features 11
2.6 Maintenance 12
2.7 In-Service Inspection 12
2.8 Instrumentation and Control Design Requirements 13
2.9 Interfacing Systems 13
2.10 Quality Assurance 14
2.11 Codes and Standards 14
2.12 Reliability Assurance 15
2.13 System Performance Requirements 15
3.0 DESIGN DESCRIPTION 16
3.1 Summary Radiation Monitoring System 16
3.2 Detail System Description 17
3.3 System Performance Characteristics 17
3.4 System Arrangement 18
3.5 Component Design Description 18
3.6 Instrumentation and Control Information 18
3.7 System Interfaces 19
4.0 OPERATION 23
5.0 SYSTEM LIMITATIONS, SETPOINTS, AND PRECAUTIONS 23
6.0 OFF-NORMAL EVENTS AND RECOVERY 24
7.0 MAINTENANCE 24
7.1 Maintenance 24
7.2 Corrective Maintenance 25
7.3 Preventive Maintenance 25
7.4 In-Service Inspection 26

List of Tables

Table Page

Table G-1 - RM00 Radiation Monitoring System 3
Table G-2 - Preventive Maintenance Summary 26
Table G-3 - In-Service Inspection Summary 27

System RM00, Radiation Monitoring General Design and Performance Requirements

1.0 PRIMARY FUNCTIONS

1.1 General Function

The WIPP RMS provides for the radiation detection, radiation measurement, and radiation status annunciation required to meet the U.S. Department of Energy (DOE) objectives and policies as stated in DOE Order 5400.5, "Radiation Protection of the Public and the Environment," and 10 Code of Federal Regulations (CFR) Part 835, "Occupational Radiation Protection." See Function Block Diagram, Table G-1.

1.2 Protecting the Public

It is DOE's objective to operate its facilities and conduct its activities so that radiation exposures to members of the public are maintained within the limits established, and to control radioactive contamination through the management of real and personal property. It is also a DOE objective that potential exposures to members of the public should be as low as reasonably achievable (ALARA) and that DOE facilities have the capabilities, consistent with the types of operations conducted, to monitor routine and nonroutine releases, and to assess doses to members of the public.

When evaluating releases, an individual outside the facility has been assumed to remain at the location of the maximum exposure for the duration of the problem. Simplified, but conservative meteorological conditions have been used to result in the highest calculated dose that this individual can receive. This person has been defined as the maximally exposed individual (MEI). Alarm and control setpoints and procedures have been established to assure that this theoretical person shall not receive unacceptable doses.

1.3 Protecting the Environment

In addition to providing protection to members of the public, it is DOE's objective to protect the environment from radioactive contamination to the extent practical. RMS alarm and control setpoints are set to achieve this function.

1.4 Protecting the Occupational Worker

It is the policy of DOE to operate its facilities and conduct its activities so that radiation exposures are maintained within the limits promulgated...and as far below the limits...as reasonably achievable. This policy applies to annual, committed, and cumulative dose equivalents. Occupational exposure measuring devices are set and monitored to achieve this goal.

1.5 Functions of the RMS

1.5.1 The RMS shall detect, measure, and annunciate:

- When predetermined levels of radiation within the plant are exceeded
- When predetermined levels of airborne radioactivity within the plant are exceeded
- When predetermined levels of radioactivity in ventilation effluents released from the plant are exceeded

1.5.2 The RMS shall provide local display and the data for display and recording in the Central Monitoring Room (CMR) of radiation levels at strategic locations throughout the plant.

1.5.3 The RMS shall provide process radiation monitoring signals via the Central Monitoring System (CMS) for an automatic shift-to-filtration of the underground (U/G) ventilation system.

1.5.4 The RMS shall provide portable detection and measurement of levels of ionizing radiation fields and levels of radioactive surface contamination.

1.5.5 The Radiation Chemistry/Dosimetry Laboratory shall provide instrumentation including Counting Room equipment required for analysis of process or effluent samples, atmosphere grab samples, and to monitor personnel exposure and contamination.

1.5.6 The RMS shall provide data on the types and levels of radiation at the facility.

1.5.7 The RMS shall provide the required radiological data necessary for reporting to the DOE.

Table G-1 – RM00 Radiation Monitoring System

RM01 CH CONTINUOUS AIR MONITORING SYSTEM	Provides an on-line indication of contact-handled (CH) area airborne radioactive particulates. Provides a signal from the U/G CAMs on Hi-Hi radiation to shift the U/G Ventilation to filtration. Provides a warning to people in the CH processing area if alarm conditions occur.
RM02 FIXED AIR SAMPLER SYSTEM	Collects air samples on filter paper to permit laboratory analysis to determine type and quantity of airborne radioactive particles
RM03 AREA RADIATION MONITORING SYSTEM	Provides an indication of gamma radiation in the remote-handled (RH) processing area. Provides a warning to people in the area if alarm conditions occur. Provides a shield door interlock and warning sign illumination and door alarm enabling for door 149 during an elevated radiation evolution in the Cask Unloading Room.
RM04 PORTABLE RADIATION MONITORING (PRM)	Provides portal monitors and portable radiation monitoring equipment.
PV00 PLANT VACUUM SYSTEM	Provides a centralized vacuum source in the WHB and the Support Building for CAM and FAS units.
RM05 RH CONTINUOUS AIR MONITORING SYSTEM	Provides an on-line indication of RH area airborne radioactive particulates. Provides a warning to people in the RH area if alarm conditions occur.

2.0 DESIGN REQUIREMENTS

The functional classifications are defined in the Documented Safety Analyses (DSAs) and the General Plant Design Description (GPDD).

2.1 General Design Requirements

The RMS shall be designed to detect and indicate radiation levels in all areas of the plant where potential radiological hazards exist. It shall provide the indications and alarms for conditions of excessive radiation levels and radioactivity concentration and control signals to interfacing systems. It shall also provide process and effluent radiation measurements and control signals to interfacing systems as required. It shall provide portable detection and measurement of levels of ionizing radiation fields, levels of radioactive surface contamination and the presence or absence of airborne particulate radioactivity releases.

The following is a list of functions associated with the Radiation Monitoring System (RM00) Equipment in support of the RMS.

Radiological Control shall provide RMS with detector check sources and sealed radioactive sources, established and implemented by WP 12-2.

Radiation Chemistry Laboratory (WIPP Laboratory) located in the lower level of the Support Building at the WIPP site shall provide follow-up analysis of RMS air filters in support of the RMS. Although it is not mandatory, it might be necessary for the swipes and filters to be analyzed by a laboratory. This analysis includes, but is not limited to, radioisotopic analysis of process and effluent samples. The system and its modifications shall meet the design requirements of the applicable codes and standards in effect at the time the design or design change was approved.

The Radiation Chemistry (WIPP Laboratory) has another section for destructive analysis of samples with other counting instruments, which is located at Carlsbad Environmental Monitoring and Research Center (CEMRC) in Carlsbad.

Radiation Safety Group will evaluate and implement the results of analysis for generating the required quarterly emissions reports to show compliance with DOE Order 5400.5 and/or 40 CFR Part 191, Subpart A, and NESHAP requirements.

Dosimetry Laboratory shall provide monitoring of personnel exposure or contamination, established and implemented by WP 12-3. The Dosimetry Laboratory performs the functions of individual monitoring as required in 10 CFR 835 Part 402.

2.1.1 Radiation Monitoring Subsystems

To meet the above general criteria in a comprehensive and integrated manner, the RMS shall be designed to include the following subsystems:

- CH CAM System
- RH CAM System
- FAS System
- ARM System (ARMS)
- Portable Radiation Monitoring (PRM)
- PVS

2.1.2 Environment

2.1.2.1 The equipment shall be designed to operate in the radiation level which they measure.

2.1.2.2 The RMS shall be capable of operating continuously within the equipment operating design parameters under expected environmental conditions, including anticipated operational occurrences associated with the equipment. Conditions which shall be considered include:

- Temperatures
- Pressure
- Relative humidity
- Non-seismic induced vibration
- Airborne dust level
- Ventilation flow rates

2.1.2.3 Protective devices shall be provided to prevent damage to the analyzers and accessories.

2.1.2.4 The equipment shall be designed for in-place testing and module replacement.

2.1.3 Local Display Unit

A local display unit (LDU) shall be provided with all CAM and ARM units, and shall meet the following requirements:

- The LDU shall be mounted in close proximity to the associated detector instrumentation.

- The LDU shall have a red flashing visual alarm light with an output equivalent to a 100 watt incandescent bulb. This alarm shall be automatically activated on radiation or radioactivity level exceeding a predetermined level, and shall stay on until the radiation or radioactivity level decreases to below the predetermined set point. If available, a similar yellow alarm shall indicate a radiation or radioactivity level, and a white or flashing green alarm shall indicate an equipment malfunction alarm.

- The LDU shall have a meter and/or display to indicate the radiation or radioactivity level over the entire range of the associated detector.

- Each LDU shall be provided with brackets or fixtures for mounting. For the stations that are supplied on a skid or panel, the LDU shall be mounted on the skid or panel, as appropriate.

- Where meter readout is used, the indication from the "live zero" feature shall be about 2% to 5% of the meter full scale above the meter scale zero point or the lowest marked value. The meter scale shall be corrected in the lowest decade for the "live zero" feature.

2.1.4 Assembly Mounting

2.1.4.1 Each instrumentation assembly may consist of several components that can be mounted near each other to form an assembly. Each component shall be mounted firmly by bolts, clamps, or welds in order to resist local shock and vibration. The detector need not be part of the assembly and may be located remotely.

2.1.4.2 Where practical, the components shall be made into assemblies that can be handled as a single unit by mounting on a common backplate or pallet (skid) or by joining the components together.

2.1.4.3 Where two or three instrumentation assemblies are required in the same location, an effort shall be made to consolidate the several instrumentation assemblies into one larger assembly on a pallet. In consolidating instrumentation assemblies, consideration shall also be given to establishment of a small number of standard assemblies, to maintenance

access and to the ability to move the consolidated assembly through existing building openings.

2.1.4.4 Each RMS instrumentation assembly, single or multiple, shall be given an equipment number and/or instrument number.

2.1.4.5 Where pallets are used for assemblies, they shall be designed for forklift handling. The typical pallet shall consist of sufficient steel beams with a steel plate welded across the tops of the beams to provide a structurally rigid frame.

2.1.4.6 Where back plates are used for assemblies, they shall be engineered to provide stiffness and support.

2.1.4.7 Each RMS instrumentation assembly that includes equipment using electrical power shall have a power distribution box or enclosure to control and distribute power to components. The power distribution box shall be a National Electrical Manufacturers Association (NEMA) Standard 12 or 4 enclosure as determined by the equipment/instrument location. The power distribution box or enclosure shall provide the following functions:

- Visually indicate the presence of AC power.
- Protect and distribute AC power to components on the equipment/ instrument including the LDU and, as applicable, the vacuum pump, and uninterruptible power supply (UPS)/standby power supply (SPS).
- Provide switching, interlocks, control, and indication for a vacuum pump where present.

2.1.5 In some cases, a remotely operated check source may be used with a detector assembly. If a remotely operated check source is used, the design shall be such that if actuator power is lost, the source returns to its stored position.

2.1.6 Check sources used to check operability, and as gross calibration of detectors shall have a half-life greater than ten years, with the type of emission(s) in the energy range being monitored by the detector.

2.1.7 The decontamination and decommissioning requirements specified in the General Plant Design Description (GPDD) apply.

2.2 Subsystem General Requirements

For subsystem specific general requirements, refer to Section 2.2 of the following subsystem chapters:

Chapter I	Subsystem RM01, CH Continuous Air Monitors
Chapter II	Subsystem RM02, Fixed Air Samplers
Chapter III	Subsystem RM03, Area Radiation Monitors
Chapter IV	Subsystem RM04, Portable Radiation Monitoring (PRM)
Chapter VI	Subsystem PV00, Plant Vacuum System
Chapter VII	System RM05, RH Continuous Air Monitors

2.3 Operational Requirements

For subsystem specific operational requirements, refer to Section 2.3 of each subsystem chapter.

2.4 Structural Requirement for the RMS

None of the RMS equipment is required to be designed to function following a Design Basis Earthquake or a Design Base Tornado. All RMS equipment should be inspected and checked for proper function following such an event.

2.4.1 Functional Class

The functional classifications are defined in the DSA and the GPDD.

2.4.2 Shock and Vibration

RMS equipment shall not degrade beyond the design specifications for operation and performance after encountering normal vibration and shock loads involved in shipping and installation. This includes maintenance, removal, and replacement of the equipment.

2.4.3 Construction

2.4.3.1 The RMS equipment shall be designed so that corrective maintenance may be performed quickly and easily. Modular construction is preferred.

2.4.4 Fabrication and Assembly Requirements

2.4.4.1 Provision shall be made to prevent the equipment from being affected by water from overhead fire control sprinklers. Panel interior shall be arranged to enable easy access for decontamination and cleaning of dust.
To accomplish this:

- U/G enclosures shall provide a degree of protection against corrosion, windblown dust, splashing water, and hose-directed water.
- Above ground enclosures shall provide a degree of protection against dust, falling dirt, and dripping non corrosive liquids.
- Fabrication and assembly of all the cabinets or enclosures shall meet or exceed the best commercial practice.

2.4.5 Materials

The materials and parts used to construct the RMS equipment shall be commercially available insofar as possible. Material used in the construction of the detectors shall be radiation-resistant so that the functional requirements of this specification are met.

2.4.6 Painting, Protection, Surface Finish, and Markings

2.4.6.1 All alarm and detection components shall bear the label of the listing or approving agency.

2.4.6.2 All hardware shall be protected against corrosion. Anodizing is preferred to painting for aluminum, and cadmium plating with a protection coating is preferred to painting for steel. All modules shall have any external projections or sharp edges rounded to prevent personal injury. Internal edges shall be deburred and rounded.

2.4.6.3 The following surfaces shall not be painted:

- Nameplates.
- Surfaces to be embedded in concrete.
- Expansion joints.
- Aluminum, bronze, copper, stainless steel, rubber, plastic, and other nonferrous materials.
- Galvanized surfaces.

- Where aluminum or steel are used in chassis or subassemblies that have electrical functions, it is preferred that these parts are not painted unless the part in a panel is visible from the front of the cabinet.

- If the part is visible from the front, or forms the front of a cabinet-mounted assembly, such as a drawer, the front visible side and edges shall be painted. If the part is not visible from the front, the preferred surface protection method for aluminum is a clear chromate conversion coating. Corrosion-resistant metals, such as stainless steel, may be used, and for such metals protective coatings shall not be used.

- Other types of steel shall be cadmium-plated and then protected with a clear chromate conversion coating. Paint may be applied over chromate conversion coatings.

- Coatings shall be applied in a dust-free sheltered area as soon as possible after surface preparation, within time limits recommended by the coating manufacturer.

2.4.7 Nameplates

2.4.7.1 Nameplates identifying each cabinet and each major subassembly within the cabinet shall be provided.

Major assemblies of cabinets and components mounted on a skid shall also be provided with a unique identification number.

2.4.8 Material Requirements

Material used with the RMS shall meet the following requirements:

- Noncorrosive material shall be used for all wetted surfaces in the flow path. Stainless steel is acceptable, provided mechanical joints, rather than welding, are used for all connections.

- Enclosures/housings for radiation monitoring instrumentation U/G shall meet the intent of a NEMA 4X or greater with a latching mechanism which does not require tools to operate. Enclosure/housing above ground shall meet the intent of NEMA 12.

- Permanent thread lubricants and sealants for use on austenitic stainless steel during service shall meet the following requirements:

  - Sulfur content less than 1,500 ppm (parts per million)

  - Total organic and inorganic halogen content less than 200 ppm

- Low melting point metals such as lead, bismuth, zinc, mercury, antimony, cadmium, tin, and similar metals, shall not be added.

- Copper and silver shall not be added.

2.4.9 Fixed Air Samplers

Refer to Section 2.4.9 of Chapter II for special materials and environmental conditions for FAS installations.

2.4.10 Plant Vacuum System

Refer to Section 2.5 of Chapter VI for special design basis requirements for the plant vacuum equipment.

2.5 General arrangement and Essential Features

2.5.1 The RMS air monitoring equipment shall be designed and installed to representatively sample or over-sample the air to detect airborne radioactivity.

2.5.2 An amplifier or preamplifier shall be used with the detectors to ensure reliable transmission of the output signal to the local radiation processor which may be located at a distance from the detectors.

2.5.2.1 Any preamplifier used shall include a fold over protection circuit to maintain full-scale readings when radiation levels exceed the detector range.

2.5.2.2 Signal output to the CMS shall be designed to minimize erroneous responses due to electrical noise, and shall be compatible with the CMS LPU.

2.5.3 The Electronics shall comply with the following requirements:

- The electronic system shall supply the high voltage for detector and preamplifier operation, amplify the detector signal, and provide an analog instrumentation output signal.

- The electronics shall have a drift of less than 0.1%/ C.

2.5.4 Calibration Source Set: A set of portable radiation calibration sources with a half-life greater than 10 years shall cause an upscale indication of 20% and 80% of normally used full scale reading. The calibration source set shall simulate a radiation field of sufficient intensity to enable checking of all calibration adjustments for each detector with the exception of high radiation values.

2.6 Maintenance

2.6.1 The RMS equipment shall utilize standard commercial components to maximize the ability to stock standard parts, minimize downtime, and use commercial technicians training.

2.6.2 Components that require periodic replacement or service shall be identified in the operation and maintenance procedures.

2.6.3 Mounting arrangements and locations shall provide full personnel access for in situ maintenance and for removal and replacement of all equipment elements.

2.6.4 If RMS equipment is determined to be inoperable, it is acceptable to use portable radiation monitoring equipment in place of an RMS unit provided that the portable unit has the same or better detection capability as the normal RMS unit in that location and is monitored by Radiation Control personnel.

2.6.5 The RMS equipment shall be designed and manufactured so that corrective maintenance may be performed quickly and easily. A suggested method is modular construction for active components so that assemblies can be replaced quickly and easily.

2.6.6 Refer to Section 2.6 of Chapter VI for specific maintenance requirements for the PVS.

2.7 In-Service Inspection

2.7.1 A baseline pre-service installation test shall be conducted for each subsystem or piece of equipment after it has been installed.

2.7.1.1 If calibration is required, the subsystem or piece of equipment shall be calibrated with approved calibration procedures or a calibration check shall be performed if a calibration is not possible.

2.7.1.2 The test shall verify that all adjustments have been made, and that all functions operate properly. High and low limits shall be specified for all adjustments and shall be listed on a system checkout sheet. Records shall be maintained per approved plant procedures.

2.7.1.3 Assemblies, relays, switches, and indicating lamps shall be tested.

2.7.1.4 The electrical tests shall include point-to-point continuity test and electrical insulation tests in accordance with the manufacturer's standard test procedures. However, coaxial and shielded cables shall not have high voltages applied to them nor shall they be tested with megohm meters. Instruments and devices shall be protected from damage by high-voltage tests.

2.7.2 Calibration checks shall be performed per approved plant procedures.

2.7.3 A functional test shall be performed periodically on each in-service RMS unit. This test shall be performed per approved plant procedures.

2.7.4 An in-service inspection shall be performed on each in-service unit at least once daily. The check is a visual inspection to verify that the readouts are normal and that no physical damage has occurred.

2.7.5 Either the functional or the calibration tests may cause control functions to be activated. The primary example is the U/G ventilation exhaust system, which may shift to the filtration mode. Any disabling of control functions shall be controlled and documented per approved plant procedures.

2.7.6 Refer to Section 2.7 of Chapter VI for specific in-service inspection requirements for the PVS.

2.8 Instrumentation and Control Design Requirements

The RMS is designed to meet the control functions addressed in Section 1.5.

2.9 Interfacing Systems

The external interfacing systems are divided into primary and secondary systems as defined below:

Primary Systems - The primary system interface is the requirement placed on other systems by the RMS.

Secondary System - The secondary system interface is the requirement placed on the RMS by other systems.

2.9.1 Primary System Interfacing

The RMS is the primary system that interfaces with systems listed below.

AU00	Underground Facilities and Equipment
CF00	Plant Building, Facilities and Miscellaneous Equipment.
CM00	Plant Monitoring and Communication System
ED00	Electrical Distribution System
FP00	Fire Protection System
HV00	Heating, Ventilation, and Air Conditioning System
VU00	Underground Ventilation System

2.9.2 Secondary System Interfacing

The RMS is the secondary system that interfaces with and provides services to the systems listed below:

CA00	Compressed Air System
CF00	Plant Building, Facilities, and Miscellaneous Equipment
CM00	Central Monitoring System
EM00	Environmental Monitoring System
HV00	Heating and Ventilating System
PP00	Plant Protection System
VU00	Underground Ventilation System
WH00	Waste Handling System

Section 3.7 contains the details of each interface.

2.10 Quality Assurance

Quality levels associated with various portions of the RM00 system are defined in the Quality Level Data Base. The quality assurance requirements for the RM00 systems are described in Section 2.5 of the GPDD.

2.11 Codes and Standards

Listed below are the codes, standards, regulatory requirements, DOE orders, etc., to be applied to the system design, construction, and operation, and to the individual components of the system, in addition to those listed in Section 2.0 and Appendix C of the GPDD.

2.11.1.1 DOE Orders and Guides

DOE O 440.1A	Worker Protection Management for DOE Federal and Contractor Employees
DOE O 5400.5	Radiation Protection of the Public and the Environment
DOE/EH-0173T	Environmental Regulatory Guide for Radiological Effluent Monitoring and Environmental Surveillance

2.11.2 Other Government Standards and Specifications

DOE/CBFO-94-1012	DOE/CBFO Quality Assurance Program Document

2.11.3 Codes and Standards

ASME NQA-1	Quality Assurance Requirements for Nuclear Facilities Applications
ANSI N317	Performance Criteria for Instrumentation used for In-plant Plutonium Monitoring
ANSI N323A	Radiation Protection Instrumentation Test & Calibration, Portable Survey Instruments
HPS ASC N13.1	Sampling and Monitoring Releases of Airborne Radioactive Substances from the Stacks and Ducts of Nuclear Facilities
ANSI N42.17B	Performance Specifications for Health Physics Instrumentation - Occupational Airborne Radioactivity Monitoring Instrumentation
ANSI N42.18	Specification and Performance of On-Site Instrumentation for Continuously Monitoring Radioactivity In Effluents

2.11.4 National Electrical Manufacturers Association

NEMA ICS 6	Industrial Controls and Systems Enclosures
NEMA ICS 1	Industrial Control and Systems General Requirements

2.11.5 Code of Federal Regulations

29 CFR §1910.1096	Ionizing Radiation
10 CFR §830.120	Nuclear Safety Management
10 CFR Part 835	Occupational Radiation Protection

2.12 Reliability Assurance

The radiation monitoring equipment shall be designed with equipment reliability and short down-time for repairs or adjustments as a consideration.

2.13 System Performance Requirements

Subsystem-specific performance requirements are presented in each of the subsystem chapters as follows:

2.13.1 RM01 - CH Continuous Air Monitors

Refer to Section 3.3.1 of Chapter I for the RM01-specific system performance requirements.

2.13.2 RM02 - Fixed Air Samplers

Refer to Section 3.3 of Chapter II for the RM02-specific system performance requirements.

2.13.3 RM03 - Area Radiation Monitors

Refer to Section 3.3 of Chapter III for the RM03-specific system performance requirements.

2.13.4 RM04 - Portable Radiation Monitoring (PRM)

Refer to Section 3.3 of Chapter IV for the RM04-specific system performance requirements.

2.13.5 PV00

Refer to 3.3 of VI for PV00-Specific System performance requirements.

2.13.6 RM05 - RH Continuous Air Monitors

Refer to Section 3.3.1 of Chapter VII for the RM05 - Specific System Performance Requirements.

3.0 DESIGN DESCRIPTION

3.1 Summary Radiation Monitoring System

3.1.1 The RMS includes all the equipment needed for detection, measurement, and alarm annunciation of radiation that directly affect plant personnel and could potentially affect the public or environment.

3.1.2 The RMS is primarily located in the areas where radioactive materials are handled.

3.1.2.1 CAMs and FASs are found in the U/G and in the WHB. Some FAS installations exist in other areas of the facility such as the Exhaust Filter Building and the Support Building.

3.1.2.2 ARMs are located in the RH area of the WHB.

3.1.2.3 The PVS pumps, motors, filters, instrumentation, control panels, and electrical distribution panels are located on the second floor of the WHB. The vacuum piping that is part of the system is installed throughout the WHB and the Support Building.

3.1.2.4 The Portable Radiation Monitoring equipment is utilized throughout the site where needed, such as the docks in the WHB. The thermoluminescent dosimeter (TLD) badge processing and storage facility is located in the Safety Building. The Radiation Chemistry (WIPP Laboratory) for counting of samples is located in the lower level of the Support Building at the WIPP site. The Radiation Chemistry Laboratory has another section for destructive analysis of samples with other counting instruments, which is located at CEMRC in Carlsbad. Portable instruments that are out-of-service are segregated from in-service instruments.

3.2 Detail System Description

Subsystem-specific system descriptions are presented in Section 3.2 of each subsystem chapter as follows:

- Refer to Chapter I for the RM01 - CH Continuous Air Monitors.
- Refer to Chapter II for the RM02 - Fixed Air Samplers.
- Refer to Chapter III for the RM03 - Area Radiation Monitors.
- Refer to Chapter IV for the RM04 - Portable Radiation Monitoring (PRM)
- Refer to Chapter VI for the PV00 - Plant Vacuum System.
- Refer to Chapter VII for the RM05 - RH Continuous Air Monitors.

3.3 System Performance Characteristics

Subsystem-specific system performance characteristics and requirements are presented in Section 3.3 of each subsystem chapter as follows:

- Refer to Chapter I for the RM01 - CH Continuous Air Monitors.
- Refer to Chapter II for the RM02 - Fixed Air Samplers.
- Refer to Chapter III for the RM03 - Area Radiation Monitors.
- Refer to Chapter IV for the RM04 - Portable Radiation Monitoring (PRM).

- Refer to Chapter VI for the PV00 - Plant Vacuum System.
- Refer to Chapter VII for the RM05 - RH Continuous Air Monitors.

3.4 System Arrangement

Subsystem-specific system arrangements are presented in Section 3.4 of each subsystem chapter as follows:

- Refer to Chapter I for the RM01 - CH Continuous Air Monitors.
- Refer to Chapter II for the RM02 - Fixed Air Samplers.
- Refer to Chapter III for the RM03 - Area Radiation Monitors.
- Refer to Chapter IV for the RM04 - Portable Radiation Monitoring (PRM).
- Refer to Chapter VI for the PV00 - Plant Vacuum System.
- Refer to Chapter VII for the RM05 - RH Continuous Air Monitors

3.5 Component Design Description

Subsystem-specific component design descriptions are presented in Section 3.5 of each subsystem chapter as follows:

- Refer to Chapter I for the RM01 - CH Continuous Air Monitors.
- Refer to Chapter II for the RM02 - Fixed Air Samplers.
- Refer to Chapter III for the RM03 - Area Radiation Monitors.
- Refer to Chapter IV for the RM04 - Portable Radiation Monitoring (PRM)
- Refer to Chapter VI for the PV00 - Plant Vacuum System.
- Refer to Chapter VII for the RM05 - RH Continuous Air Monitors.

3.6 Instrumentation and Control Information

Subsystem Specific Instrumentation and control information is presented in Section 3.6 of each Subsystem Chapter.

3.7 System Interfaces

Primary System Interface

The RMS requires support from the systems detailed below.

3.7.1.1 AU00 - Underground Facilities and Equipment

- Provide space to house the U/G CAMs. The enclosure for the underground CAMs requires an alcove of approximately 10 feet wide (North to South) by 16 feet long (East to West) and the same height as the back at the exit of the active panel(s).

3.7.1.2 CF00 - Plant Building, Facilities, and Miscellaneous Equipment.

- Provide space in the WHB to house CAMs. The Alpha and beta/gamma detectors are mounted on walls or railings of the RH area, as necessary or for the CH Bay are stored on the CH Bay docks until needed at which time they are mounted on the waste container being unloaded during use. These CAMs require approximately 4 square feet of floor space.

- Provide space in the WHB and Exhaust Filter Building to house FAS units. The FAS units that use the central PVS are normally mounted on a wall and require approximately 4 square feet. The self-contained FAS units that are equipped with inverters and power supplies require an area of approximately 12 square feet. Those FAS units that are combined with a CAM are accommodated on the associated CAM skid.

- Provide space in the WHB to house the ARM units. The ARM units are normally mounted on a wall or railing and require approximately 4 square feet.

- Provide space for the analytical and dosimetry laboratories, and the instrument and calibration room for portable radiation monitoring equipment. One room approximately 300 square feet is required for the Low Level counting Laboratory. A room of approximately 300 square feet is required for the TLD laboratory.

- Provide space in the WHB to house the vacuum system. The space is isolated from occupied areas because of the sound levels of the pumps. An area of approximately 600 square feet is required, including access areas for maintenance. An overhead clearance area of 18 feet is provided.

3.7.1.3 CM00 – Plant Monitoring and Communication

- Provide remote display, recording and alarm of selected CAM, ARM, and for the PVS. Information is fed from the CAMs, and ARMs to the CMS in analog and binary form via LPUs that are part of the CM00 system. Analog information is transmitted to the LPU using 4 to 20 mA (milliampere) signals. Binary signals are contact or voltage signal information transmitted to the LPU. Power for the contact signals are supplied by the LPU. Information such as the following are monitored:

  a. Radiation levels, Filter differential pressure, and sample airflow rate are sent to the CMS as analog signals.

  b. Alarms are sent to the CMS as digital signals.

  c. Various self-diagnostic functions, such as high or low airflow in a CAM or a zero radiation level over a defined period sensed by the electronics in an ARM (gamma detector), generate a Fault signal which is sent to the CMS as a digital signal.

- Provide two analog channels to monitor the vacuum in the CH waste branch and the RH waste branch of the PVS. Provide three digital contact type channels to monitor whether the three vacuum pump motors are energized.

- The physical interface with the CMS for analog and digital signals shall be at the field terminals of the LPU nearest to the RMS or PV00 equipment.

3.7.1.4 ED00 – Electrical Distribution System

- Provide 120 VAC, 60 Hz, single-phase, 20 amp service to each surface CAM unit. CAMs are powered through the UPS portion of ED00.

- Provide 120 VAC, 60 Hz, single-phase, 30-amp service to each U/G room exit CAM. These CAMs each have a battery operated inverter and UPS with sufficient capacity to run the electronics and the vacuum pump for a period of 30 minutes. See Appendix F1 for power supply information specific to each CAM.

- Provide 120 VAC, 60 Hz, single-phase, 8-amp service to each FAS unit having a self-contained vacuum pump. Power at 120 VAC, 60Hz, single phase, 15-amp service is supplied to FAS units with a self-contained vacuum pump and backup power.

- Provide 120 VAC, 60 Hz, single-phase, 2-amp service to ARM units. ARMS are connected to the UPS portion of ED00.

- Provide 480 VAC, 60 Hz, 3-phase, 30-amp service to each PV00 pump. The electrical system must also furnish the motor control centers, the distribution breakers and the wire connections to the motors. The electrical system also supplies the control wiring between the vacuum pumps control panel and the motor control centers.

- The physical interface shall be at the breaker protected terminals within the ED00 enclosure supplying power to the RMS or PV00 equipment.

- Provide 115 V, 60 Hz power to items including the Radiation Chemistry Laboratory equipment, the TLD reader, and many of the transportable instruments. The TLD laboratory must be provided with non ultraviolet lighting to illuminate the area.

- The interface boundary shall be at the breaker protected terminals within the ED00 enclosure supplying power to the RMS as shown in the RMS electrical drawings.

3.7.1.5 FP00 – Fire Protection

- Provide fire protection to the RMS equipment in the surface structures and U/G.

3.7.1.6 HV00 - Heating and Ventilating System

- Provides environmental control to RMS equipment in the WHB.

- Provide environmental control for the High Level, Low Level, and TLD laboratory.

- Provide exhaust ducting for the exhaust of the vacuum pumps. This exhaust is filtered via high efficiency particulate air (HEPA) filters prior to being exhausted to atmosphere.

3.7.1.7 VU00 - Underground Ventilation System

- Provides the ventilation for the U/G RM00 equipment. Exhaust airstream from the active waste room is monitored by the U/G CAMs for radiological release.

3.7.2 Secondary System Interfacing

- The RMS is the secondary system that interfaces with and provides services to the systems listed below.

3.7.2.1 CF00 - Plant Buildings, Facilities, and Miscellaneous Equipment

- Provide a radiation alarm signal to illuminate a warning light and enable an alarm for door 149 being not fully closed.

3.7.2.2 CM01 - Central Monitoring System

- Provide the alarm signals from the underground Alpha and beta CAMs which sample the panel exhaust and which are used by CM01 to initiate the shift-to-filtration mode. The physical interface between RM01 and CM01 shall be at the input terminals of the CMS LPU nearest the sensors.

- Provide the real time radiation status information required to provide effective administrative control of waste handling and ventilation both aboveground and U/G.

- The physical interface with the CMS for analog and digital signals shall be at the field terminals of the LPU nearest to the RMS or PV00 equipment.

3.7.2.3 EM00 – Environmental Monitoring

- Shuts down effluent sampling on the primary skid at Station A upon shift-to-filtration.

3.7.2.4 PP00 - Plant Protection

- Provide the portal radiation monitors for the guard and security gate house.

3.7.2.5 VU00 - Underground Ventilation System

- The RM01 U/G CAMs provide signals to VU00 via CM01 to shift the U/G ventilation exhaust from the mine to filtration on a Hi-Hi Radiation signal.

3.7.2.6 WH00 - Waste Handling Equipment

- Provide an ARM (gamma detector) alarm signal to prevent opening the RH area cask unloading room shield door on an elevated radiation level.

3.7.3 Internal Interfaces

3.7.3.1 PV00 – Plant Vacuum System

Internal to the RMS there is an interface of the PVS with CAM and FAS units which do not have their own vacuum systems. The PVS shall:

- Provide not less than 12 inches of mercury at a minimum of 1 to 3 scfm (standard cubic feet per minute) to the CAM units which do not have their own vacuum supply. See Appendix F1 for CAMs connected to PV00.

- Provide not less than 17 inches of mercury at a minimum of 1 scfm to the FAS units which do not have their own vacuum supply. See Appendix F2 for FASs connected to PV00.

- The physical interface shall be at the RMS side of the isolation valve provided for the local extension of the PVS.

4.0 OPERATION

The operation of the RMS is performed in accordance with approved procedures.

5.0 SYSTEM LIMITATIONS, SETPOINTS, AND PRECAUTIONS

- Refer to Chapter I for the RM01 - CH Continuous Air Monitors.

- Refer to Chapter II for the RM02 - Fixed Air Samplers.

- Refer to Chapter III for the RM03 - Area Radiation Monitors.

- Refer to Chapter IV for the RM04 - Portable Radiation Monitoring (PRM)

- Refer to Chapter VI for the PV00 - Plant Vacuum System.

- Refer to Chapter VII for the RM05 - RH Continuous Air Monitors.

6.0 OFF-NORMAL EVENTS AND RECOVERY

- Refer to Chapter I for RM01.
- Refer to Chapter II for RM02.
- Refer to Chapter III for RM03.
- Refer to Chapter IV for RM04.
- Refer to Chapter IV for Health Physics Equipment.
- Refer to Chapter VI for PV00.
- Refer to Chapter VII for RM05.

7.0 MAINTENANCE

This section is devoted to those features of the RMS that enable and enhance maintenance of the system. Guidelines are provided for performing maintenance, and in-service inspection.

In accordance with DOE 4330.4B requirements, the maintenance program "...shall contain provisions sufficient to preserve, predict, or restore the availability, operability, and reliability of plant structures, systems, and components important to safe and reliable operation of the...facility." This is the guiding requirement and basis for the following material.

All radiation monitoring equipment maintenance activities must be performed in accordance and consistent with the WIPP Site Safety Manual requirements.

Tables G-2 and G-3 are the minimum recommended maintenance schedule. Periodicity may be modified based on operating history and evaluation by engineering.

7.1 Maintenance

The RM00 system maintenance shall adhere to the following guidelines.

7.1.1 If a failed unit is contaminated or in a radiologically controlled area, the method of repair should consider minimizing the production of radioactive waste and ALARA concepts, in addition to the impact on operation. Failed units that are contaminated should be adjusted or repaired in place if possible.

7.1.2 Recalibration of the CAMs and calibration checks of the ARMs which are in use shall initially be performed annually using radioactive test sources. The periodicity shall be reviewed periodically and adjusted based on manufacturer's recommendations, the equipment failure rate, and the results of the review of any drift in the settings found during the performance of maintenance and calibration.

7.1.3 Calibration of the flow through the CAMs which are in use shall initially be performed annually. The periodicity shall be reviewed periodically and adjusted based on manufacturer's recommendations, the equipment failure rate, and the results of the review of any drift in the settings found during the performance of maintenance and calibration.

7.1.4 The periodicity of operational checks, calibrations, and routine maintenance operations shall depend on whether the equipment is in use. Equipment that is not in use, need only be checked for operability before it is to be put in service. Refer to Appendix G for current calibrations.

7.1.5 Maintenance records shall be maintained per approved plant procedures.

7.2 Corrective Maintenance

7.2.1 After corrective maintenance, a retest should be performed to assure the system has been restored to the design operating capability. The degree of retest shall depend on the maintenance performed and shall use a graded approach. On this basis, the retest can range from no retest to a complete recalibration and a system checkout.

7.3 Preventive Maintenance

Preventive Maintenance is performed upon equipment to prolong its operational life and ensure correct operation, and includes calibrations or calibration checks on a periodic basis. Preventive maintenance may also be performed to replace wearing or clogging components that could cause greater damage if left uncorrected. Preventive maintenance requirements and frequencies are summarized on Table G-2. Frequency may be changed based on field conditions.

Table G-2 - Preventive Maintenance Summary

Item	Frequency	Maintenance Action
CAMs	Annually	Calibrate Sample and Background Detectors
	Annually*	Calibrate Inst & Sample Flow
	Annually*	Clean Battery & Inverter Enclosure
	Semiannually*	Replace Vacuum Pump Filters
	Annually*	Check Vacuum Pump Operation
	Annually*	Vacuum Relief Valve Set to Protect the Vacuum Pump
	Annually*	SPS 30 min. Backup Power Check
	Annually*	Mini UPS Operational Check
	Semiannually*	Clean Skids After Reassembled Check Sample Tubing in-leakage
ARMS	Annually	Calibration Check, Calibrate if the Calibration Check fails
FASs	Annually	Calibrate Flows
	Annually*	Check Vacuum Pump Operation
	Annually*	Vacuum Relief Valve Pressure Setting
	Annually*	SPS 30 min. Backup Power Check
	Semiannually	Clean Skids/Panels (annually*)
	Semiannually*	Replace Vacuum Pump Filters
Survey Inst.	Annually	Calibrate
Portal Monitors	Annually	Calibrate
Low Level Lab Equip	Annually	Vendor Service
High Level Lab Equip	Annually	Vendor Service
TLD Readers	Semiannually	Service
TLD Readers	Annually	Calibrate
Portable CAMs	Annually	Calibrate
Plant Vacuum System	4000 hr	Lubricate Pump
	Annually	Pump Motor Electrical Test
	Annually	Clean Control Panel

7.4 In-Service Inspection

In-service inspection for the RM00 system includes checks to verify that there are no obvious abnormalities and include differential pressures across filters, temperature of pumps, physical damage to the equipment, trends of instrument drift, burned out indicating lamps, etc. The trends monitored can sometimes "predict" an oncoming component failure and allow for planned correction. In-service inspection also makes periodic functional checks to verify the equipment is operating properly. The frequency and content of in-service inspections are summarized on Table G-3.

Table G-3 - In-Service Inspection Summary

Item	Frequency	Maintenance Action
CAMs (RM01 & RM05) Portal Monitors ARMS (RM03) TLDs	Daily	Observe Proper Operation Check for Inspection Trends Check for Proper Switch Positions Check for Current Cal Sticker Check with built in test circuitry Ensure DP pressures (CAMs) are below 2.0 pounds per square inch (psi) with new filter installed Ensure filter backing plate (CAMs) is not clogged
CAMs (RM01 & RM05) & ARMS (RM03)	Monthly	Functional Checks
CAMs (RM01 & RM05)	Semiannually	Vacuum Pump Functional Test Record and verify the following is within acceptable tolerance d/p of air inlet gauges Plant vacuum on header gauges Vacuum pump discharge pressure Pump hours of operation since last PM
FASs (RM02)	*Daily	Check for Damage Observe proper Operation Check for Current Cal Sticker Ensure DP pressure is below 2.0 mercury with new filter installed
	Semiannually	Flow Indication Functional Check
Operation		Check for Current Cal Sticker
Plant Vacuum System	Daily	Check for damage Check for Instrument Trends Check for proper switch positions Observe proper Operation Verify the following is within acceptable levels: Unusual noises Vibration

* This inspection is performed daily on FASs in operational areas, and on all FASs when filters are changed.

Chapter I
Table of Contents

Subsystem RM01, CH Continuous Air Monitor

1.0 PRIMARY FUNCTIONS 1
2.0 DESIGN REQUIREMENTS 1
2.1 General Design Requirements 1
2.2 Subsystem General Requirements 1
2.3 Operational Requirements 6
2.4 Structural Requirements for the RMS 6
2.5 General Arrangement and Essential Features 6
2.6 Maintenance 6
2.7 In-Service Inspection 6
2.8 Instrumentation and Control Design Requirements 6
2.9 Interfacing Systems 6
2.10 Quality Assurance 7
2.11 Codes and Standards 7
2.12 Reliability Assurance 7
3.0 DESIGN DESCRIPTION 7
3.1 Summary CAMs 7
3.2 Detail System Description 7
3.3 System Performance Characteristics 8
3.4 System Arrangement 9
3.5 Component Design Description 10
3.6 Instrumentation and Control Information 11
3.7 System Interfaces 11
4.0 OPERATION 11
5.0 SYSTEM LIMITATIONS, SETPOINTS, AND PRECAUTIONS 11
5.1 System Limitations 11
5.2 Setpoints 11
5.3 Precautions 11
6.0 OFF-NORMAL EVENTS AND RECOVERY RM01 12
7.0 MAINTENANCE 12

List of Figures

Subsystem RM01, Continuous Air Monitors

Figure RM I-1 – Underground CAM Configuration i

List of Tables

Table RM I-1 - CAM Alarm Setpoints 11

Subsystem RM01, CH Continuous Air Monitors

1.0 PRIMARY FUNCTIONS

Refer to Section 1.0 of Chapter G for the primary radiation monitoring functional requirements.

2.0 DESIGN REQUIREMENTS

2.1 General Design Requirements

Refer to Section 2.1 of Chapter G for the general design requirements.

2.2 Subsystem General Requirements

2.2.1 RM01 – CH CAM System

Air sampling and analysis equipment shall be provided to enable a continuous determination of the airborne radioactivity status of selected locations within the CH Bay and U/G based on the accident analysis presented in the WIPP DSA, and to alarm for conditions of potential radiological hazard.

The CAMs shall be located to provide the desired personnel protection and alarm response considering credible accidents that could release airborne contamination. Portable CAMs may be used to provide coverage in accordance with 10 CFR Part 835.

CAMs shall be routinely calibrated and maintained. CAMs used to satisfy the requirements of 10 CFR Part 835 shall be capable of providing an alarm at an activity level equivalent to eight DAC (derived air concentration) (DAC-hr) hours, under laboratory conditions. The CAMs used in the U/G shall provide sufficient capability to support National Emission Standards for Hazardous Air Pollutants (NESHAP) requirements.

The data obtained from the instrumentation comprising the RM01 system shall be available to the CMS for recording and to the CMR operator for display on demand.

2.2.1.1 The RM01 system shall utilize stations that contain a filter, filter assembly, detector, airflow regulator, and supporting flow and pressure instrumentation. Some stations may have built in vacuum pumps. For those stations that do not have pumps, tubing shall be provided to connect the CAM to the plant vacuum system. The CAM station shall conform to the requirements specified in ANSI 42.17B.

2.2.1.2 CAMs shall be capable of collecting air particulate samples and detecting alpha and/or beta activities. U/G CAMs that sample air from the room(s) receiving waste will be used to cause an automatic U/G ventilation shift to

filtration upon generating a Hi-Hi radiation alarm. Dock CAMs will send Hi alarm signals to the CMR in case there is ever a release from the TRUPACTS at the docks.

2.2.1.3 CAMs shall be suitable for continuous operation and shall have a 25-year design life. If this cannot be achieved for specific components (e.g., detectors), the design life shall be extended to 25 years by means of the recommended maintenance program.

2.2.1.4 Components such as seals, gaskets, and nonpermanent lubrication shall have a minimum design life of 5 years and be easily field-replaced. All components that require periodic replacement shall be identified clearly and included in a preventative maintenance and spare parts inventory.

2.2.1.5 Protection devices shall be provided to prevent damage to the electronic circuitry and detectors, pumps and accessories.

2.2.1.6 Detectors used in the CAMs must meet the following criteria.

- Detectors in CAMS used to meet the requirements of 10 CFR §835.403 shall be capable of measuring one DAC when averaged over 8 hours (8 DAC-hr), under laboratory conditions.

- The sample detector shall be located such that it provides 2 pi geometry with respect to the sample.

- The radiation detectors may be scintillation crystal-photo multiplier tubes, Geiger-Mueller tubes, proportional counters, ionization chambers or other commonly acceptable detectors that meet requirements specified for each particular type of radiation.

- A calibration port shall be provided and the flow calibration procedures shall be such that they can be performed by WIPP personnel.

2.2.1.6.1 Beta Detector

- Each detector should be provided with a suitable means for calibration and operability checks.

- The filter holder and detector shall be located within a shielded compartment that provides the desired sensitivity in a background of 20 mrem/hr.

- The sensitive element shall have an efficiency greater than 95% for all entering beta radiation.

- The window shall have a total mass per unit area of 2.0 mg/cm 2 or less. Either aluminized Mylar or a more rugged material such as beryllium may be used. A comparison between the aluminized Mylar and beryllium should be made to determine the loss in efficiency for beta detection.

- The energy range for the beta detector shall be from 80 KeV (kilo-electron volts) to 2.5 MeV (million electron volts). The detector response efficiency shall be 20% for strontium-90.

- The detector shall be shielded to prevent gain changes due to orientation or to stray magnetic fields.

2.2.1.6.2 Alpha Detectors

- All samplers shall have an efficiency of ≥15% of 2 pi emission.

- The detector shall be sensitive to alpha particles from plutonium and cover an energy range appropriate to the application for which the CAM is being used.

2.2.1.7 The electrical systems of the CAM shall meet the following requirements:

The U/G CAMs shall be provided with a 30-minute battery backup that shall provide continuous power supply in case of a input power failure. The dock CAMs have mini-UPSs to supply regulated alternating current (AC) power.

With the exception of internally generated high voltages, there shall be no potentials greater than a nominal 120 VAC (volts, alternating current) connected to or existing within any instrument enclosures normally accessed by Health Physics or Instrument personnel.

The power source connections shall be separated from signal connections and connected to terminal blocks with sufficient separation and/or barriers to prevent accidental cross-connection.

To provide for system modifications, expansion, and damage, each Input and Output signal cable and its associated connector shall be installed with ten percent spare conductors and connector terminals (pins), except for coaxial and high-voltage conductors.

The circuits wired to terminal blocks for external connection shall be grouped to allow for termination of all conductors of each incoming cable on adjacent terminals.

2.2.1.8 Sampler filter material shall meet the following requirements:

The filter shall be a membrane-type capable of withstanding a flow rate up to 3 cfm (cubic feet per minute).

The filter pore size shall be selected to retain good particle collection efficiency, maintain a low pressure drop, and be compatible with the type of radiation being measured.

The pressure drop across the filter shall not exceed 3 inches of mercury (1.47 psi) at 1 cfm for a clean filter.

2.2.1.9 Filter assembly shall meet the following requirements:

The filter assembly shall be quickly accessible for easy filter paper change.

The filter assembly shall be positioned so that the airflow to the filter is unimpeded, and the sampling inlet port of the filter is positioned to measure the area of concern.

The filter holder shall have a corrosion resistant porous backing screen or plate. For alpha detection a backing plate that provides support and maintains consistent spacing from the filter to the detector is preferred.

A suitable means must be provided to hold the filter against the backing support to insure that the filter does not shift while in operation and sample air does not bypass the filter.

The filter assembly shall not reduce the active collection area of the filter by more than 15% and shall not cause any localized buildup of material on the filter.

The detector and the filter size shall be matched to maximize the efficiency of the combination. Deviation from this requirement is permissible providing the reason for the deviation is documented and approved by Engineering and Radiation Safety.

2.2.1.10 Flow regulation for the CAM shall meet the following requirements:

Nominal air sampler operating airflow rate shall be dependant upon the requirements for effective sampling.

The flow regulator shall be capable of operating from a negative header pressure of at least 12 inches of mercury.

The flow regulator shall maintain a constant flow rate of ±10% through filter paper for pressure drops across the filter paper of up to 10 inches of mercury (4.91 psi).

A flow meter shall be provided to measure the flow rate at the flow regulator.

Calibration procedures shall be controlled by the WIPP Operation Controlled Procedures Program to satisfy minimum calibration requirements.

Flow and pressure data will be furnished to the CMS using analog and/or digital signals from each selected facility station for alarming (such as low flow) and historical purposes. The analog and/or digital signal shall be of sufficient strength to prevent distortion by high electromagnetic fields.

2.2.1.11 Each CAM unit shall include the following functions:

Provide readout of measured alpha radiation via the local and remote displays.

Local readout of the sample flow rates.

Transmittal of the measured radiation levels and flow rates to the CMS to be recorded/and optionally displayed (for selected CAM units only).

The U/G CAMs shall have locally adjustable alarm setpoints Hi alarm and a Hi-Hi alarm levels. The dock CAMs shall have only a Hi alarm level.

Local visual and/or audible alarms for each of the alarm functions.

- The Hi-Hi visual alarm shall be a red light.
- The Hi visual alarm shall be a yellow light.
- The malfunction alarm activates a white light.

Transmission of the Hi, Hi-Hi, and the malfunction alarms to the CMS to alarm in the CMR. Loss of power may be included with the malfunction alarm.

The Hi-Hi and Hi alarms shall have separate indications on or near the specified local detector.

Failure of the alpha CAM to update the background count shall result in an alarm.

The malfunction alarm and any other alarms that indicate operating status or protect the equipment shall be indicated by individual local lights.

The alarms shall not operate if the CAM is switched "off."

Hi-Hi, Hi and Failure alarms shall be initiated by DPDT relay contacts rated at 2A at 120 VAC. Other alarms shall be electronically controlled using analog circuits and shall be capable of being set at any value of the input scan. The reset of an alarm shall be possible locally where the reset shall cause the local audible alarm to cease and the flashing local visual alarm to continue flashing.

2.2.1.12 There shall be an alarm disable capability associated with all U/G CAMs that are connected to shift-to-filtration function which provides the ability to override all radiation alarms from these units.

2.3 Operational Requirements

2.3.1 CAMs in the CH Bay shall be provided in accordance with the requirements of 10 CFR Part 835, to ensure safe operation of the plant during normal operations, off-normal events and recovery from off-normal events.

2.3.2 CAMs shall be placed at the exit of the active panel(s). There shall be two CAMs for each panel. These CAMs are not required to meet the requirements of 10 CFR 835.

2.3.3 During waste emplacement in the underground, at least one CAM shall be in operation in the panel in which the waste is being emplaced.

2.4 Structural Requirements for the RMS

Refer to Section 2.4 of Chapter G for the general structural and materials requirements.

2.5 General Arrangement and Essential Features

Refer to Section 2.5 of Chapter G for general location requirements and related constraints.

2.6–2.12 Cross-Reference

Refer to Chapter G for the general program requirements regarding the following SDD topics:

2.6 Maintenance

2.7 In-Service Inspection

2.8 Instrumentation and Control Design Requirements

2.9 Interfacing Systems

2.10 Quality Assurance

2.11 Codes and Standards

2.12 Reliability Assurance

3.0 DESIGN DESCRIPTION

3.1 Summary CAMs

Refer to Section 3.1 of Chapter G for radiation monitoring summary descriptions.

See Appendix A for studies that support CAM design.

3.2 Detail System Description

3.2.1 The CAMs are instruments that are used to monitor for an unexpected release of airborne radioactive particles.

3.2.2 CAMs are provided in the U/G and on the CH Bay docks of the WHB. The CAMs utilize detectors and computer algorithms that analyze particulate matter deposited on filter paper and provide a continuous determination of the airborne radioactivity status of those locations. The information generated by the CAMs is made available locally and to the CMS to indicate radiation levels, alarm conditions and equipment status. The location and other pertinent information for all CAMs is shown in Appendix F-1.

3.2.3 The U/G CAM station contains a housing to hold a filter paper, a vacuum pump with an airflow regulator to draw air from the exhaust of the active panel through the filter, a detector to read the particulate deposited on the filter, electronics to convert the detector signal to usable outputs, and a power supply that converts incoming power to the voltages needed by the station. The detector and its electronics provide the ability to detect alpha and beta emitters deposited on the filter paper. The dock CAMs contain a housing to hold a filter paper, a flow sensor, electronics to convert the detector signal to usable outputs, a power supply that converts incoming power to the voltages needed by the heads. All the samplers/heads can be moved to sample the air in the TRUPACTs. The heads have the ability to monitor for alpha radiation but not beta radiation.

3.2.4 Selected skids obtain their vacuum supply from the plant vacuum system while others are equipped with their own vacuum pump. Refer to Appendix F-1.

3.2.5 Selected skids are equipped with an inverter power supply, and a battery connected in such a fashion that upon loss of external power the inverter will provide AC power for approximately 30 minutes. Refer to Appendix F-1.

3.2.6 Selected skids are connected to a central UPS and SPS to provide a reliable power source. Refer to Appendix F-1.

3.2.7 The sample rate for the underground CAMs shall be set to a value appropriate to the model of CAM used and the application.

3.2.8 Flow through the CAM filters is maintained constant by flow regulators mounted in the sample line downstream of the filter. These regulators have the capability of maintaining design flow over the range of differential pressure across the filter from zero to 10 inches of mercury.

3.2.9 The CH waste CAMs have circuitry that sense a detector failure and transmit a malfunction alarm to the CMS. The background radiation produces an above zero reading for the beta CAMs and a near-zero analog signal is interpreted by the CMS as a problem, and an additional malfunction signal is produced by software. The normal level reading for an alpha CAM can be very close to zero (or negative) and an alpha detector failure cannot be detected by the CMS in this manner.

3.2.10 A horn and lights are mounted on the outside of the electronics cabinet and will indicate if either a Hi-Hi, or a Hi radiation level condition is sensed by the U/G CAMs. A malfunction indicating light is mounted on the outside of the cabinet and will flash if a malfunction condition exists. The dock CAMs have a horn and red alarm light on both the ASM-1000s and the CAM heads which indicate a radiation alarm. The ASM-1000 also has an amber light which indicate a trouble alarm.

3.2.11 On the U/G and dock CAMs that have their own vacuum pump, a vacuum relief valve is installed. The vacuum relief valve provides protection for the vacuum pump by allowing airflow to the pump in the event of line blockage. The dock vacuum pumps are used when plant vacuum is not available.

3.3 System Performance Characteristics

3.3.1 CAMs

3.3.1.1 CAM Requirements

3.3.1.1.1 There shall be fully operational alpha CAMs at each of the following locations, if there is radioactive waste handling in the area.

- Exhaust side of the active U/G waste room(s)
- Each CH Bay dock.

3.3.1.1.2 The shift to filtration function shall have a minimum of one U/G alpha CAM operable in the panel where waste is being emplaced, otherwise waste

handling activities in that panel shall be suspended. If a dock CAMs are not operable, CH waste handling for that CH Bay docking station shall be suspended.

3.3.1.2 Normal Operations

3.3.1.2.1 Alarms from the installed CAMs are available in the CMR and locally. Action required as a result of these alarms is initiated by the CMR operator and by the personnel in the area of the alarm.

3.3.1.2.2 In the U/G, CAMs are used to monitor the exhaust of the active waste panel(s) while waste handling is in progress. These CAMs are connected to the CMS. The CMS will cause an automatic U/G ventilation shift to filtration if any CAM generates a Hi-Hi alarm.

At the docks, CAMs monitor for alpha radiation from the TRUPACTs or waste drums. If radiation is detected, the CMS receives an alarm.

3.3.1.2.3 Typical readouts of the alpha and beta instruments are shown below.

	Above Ground	Below Ground
Alpha	0 cpm	0 cpm
Beta	None	175 cpm

3.3.1.2.4 The filters are normally changed manually three times per week in the aboveground units. The filters in the U/G CAMs are changed automatically based on the differential pressure across the filter. The stock of filters in the U/G is replenished daily.

3.3.1.3 Off-Normal Operations

3.3.1.3.1 If a required CAM and remote alarm capability is determined to be inoperable, operations involving the handling of radioactive waste in the area monitored by the CAM shall be terminated. Operations may resume when either a portable unit which has the same or better monitoring capabilities is in place or the fixed equipment is repaired.

3.3.1.4 There are no infrequent operations identified for this system.

3.4 System Arrangement

3.4.1 CAM System Arrangement

3.4.1.1 The location of each instrument, power supply information, and other interface information is shown in Appendix F. The CAM numbers shown on this figure are the CAMs that utilize the component arrangement shown on their designated figure.

3.4.1.1.1 The dock CAMs typically use plant vacuum, but also have a local vacuum pump if plant vacuum becomes unavailable.

3.4.1.2 The U/G CAMs are configured as depicted in Figure RM1-1.

3.4.1.2.1 Power connection are provided in anticipated locations in the U/G so that the mobile units may be moved, when necessary, and put into service.

3.5 Component Design Description

3.5.1 Component Design Description for U/G and Dock CAMs

3.5.1.1 The U/G CAMs use an ion implanted silicon detector with its signal fed into a 256-multichannel pulse height analyzer for detection of both alpha and beta radiation. The instrument is microprocessor-based and contains a default algorithm that allows for the subtraction of radon progeny alpha from the Plutonium 239 region of interest.

3.5.1.2 The filter papers used in the CAMs are designed to collect particles 3 microns or larger. The filters are 47 mm (millimeters) in diameter supportive membrane filters. They are manufactured with a copolymer deposited on a nylon mesh for support.

3.5.1.3 Ideally the size of the filter holder, the filter paper and the detector head should be matched. Under these conditions the efficiency of the system is maximized.

The dock CAMs are configured to send a signal to their local display unit and send signals to an external PC via ethernet. Each sample head has alarm lights and a flow sensor for detecting actual flow.

3.5.1.3.1 The LCD will display graphs of the energy spectrum of the isotopes being detected, will display strip charts of alarm variables versus time, and will display messages for use by the operator.

3.5.1.3.2 The keypad provides the operator input to the instrument. It is used to set operating parameters and to view information stored in the units memory. Access codes are utilized to prevent access by unauthorized personnel to functions of the instrument that could adversely affect its operation.

3.5.1.3.3 The LCD will present the actual flow being detected by the flow sensor.

3.5.1.4 CAMs that are not connected to the central UPS are equipped with UPSs.

3.6 Instrumentation and Control Information

3.6.1 CAMs

See Table RM I-1 for system operational setpoints.

3.7 System Interfaces

Refer to Section 3.7 of Chapter G for the CAMs primary and secondary system interfaces.

The interface points between RM01 CAMs and their respective connections to support and monitoring subsystem (i.e., PV00, ED00, and CM01) are presented on the controlled radiation monitor drawings.

4.0 OPERATION

Refer to Section 4.0 of Chapter F for RMS operating procedures.

5.0 SYSTEM LIMITATIONS, SETPOINTS, AND PRECAUTIONS

5.1 System Limitations

5.1.1 The beta readouts typically may vary between 30 and 1,000 counts per minute depending on many variables including the time of day and the activity in the area. The alpha CAMs readout generally around zero counts. The differential pressure across the filter is typically less than 6 psi.

5.2 Setpoints

The CAM alarm setpoints are listed in Table RM I-1.

Table RM I-1 CAM Alarm Setpoints

	* Operating HI Alarm Setpoint	* Operating HI-HI Alarm Setpoint
U/G Alpha Setpoints	10 DAC	24 DAC
U/G Beta Setpoints	10 DAC	24 DAC

	High Flow Alarm Setpoint	Low Flow Alarm Setpoint
U/G CAMs	3.3 scfm	2.7scfm

5.3 Precautions

5.3.1 Whenever there is active waste handling in an area monitored by a CAM, the CAM must be operational, or an appropriate portable CAM used in its place.

5.3.2 When operating or maintaining the CAM system, personnel should be aware of the following precautions.

5.3.3 The filter papers removed from the sample holders are potentially contaminated and should be treated as contaminated until proven otherwise.

5.3.4 The U/G beta detectors have high voltages associated with them. The unit should be de-energized before disassembling the detector housings. Power shall be removed from all equipment prior to performing repairs.

5.3.5 Two-way radios shall not be transmitting within 25 feet of any CAM.

6.0 OFF-NORMAL EVENTS AND RECOVERY RM01

On loss of power, RM01 equipment is supplied either from the main UPS or has its own UPS.

7.0 MAINTENANCE

Refer to Section 7.0 in Chapter G for Maintenance Requirements.

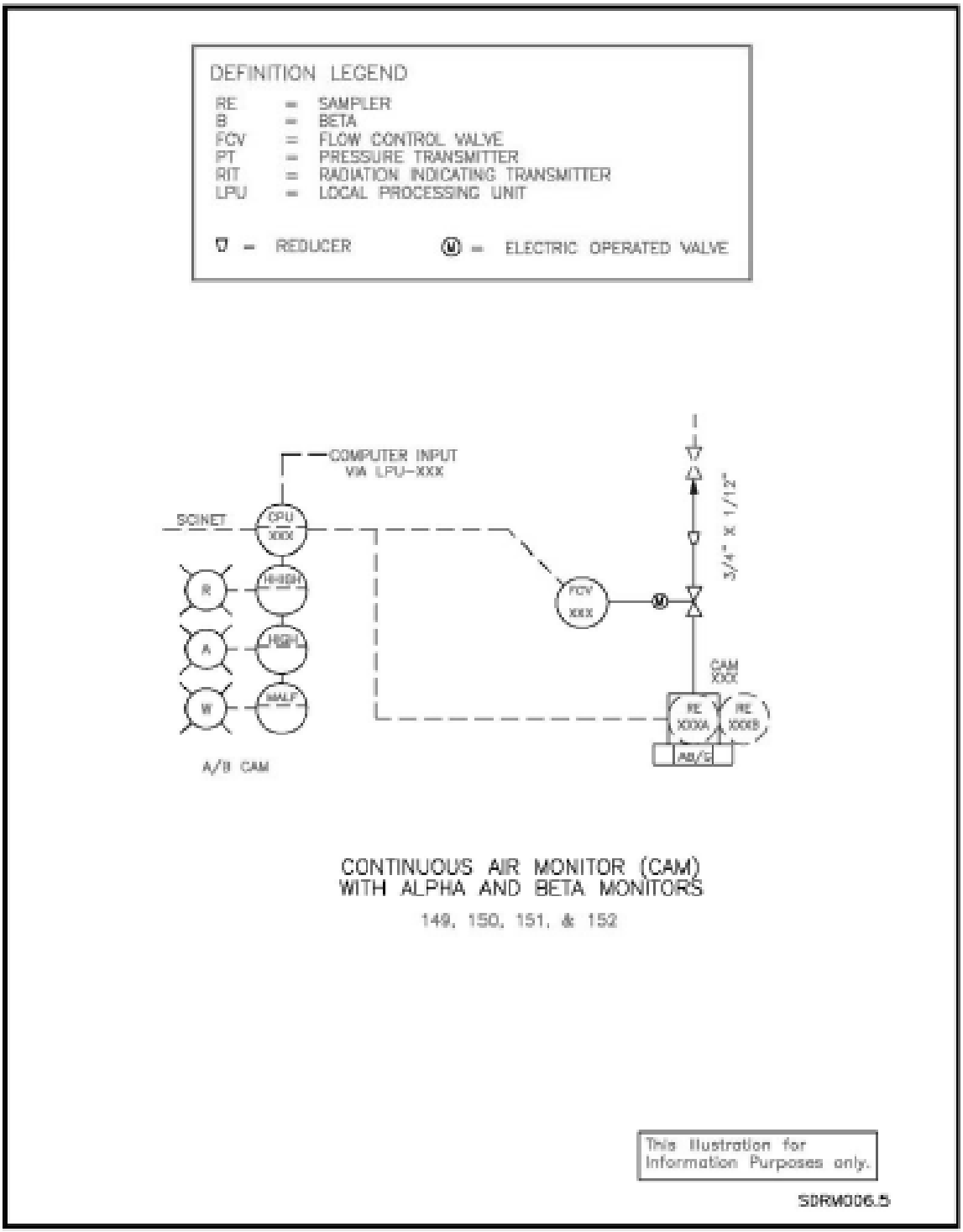

Figure RM I-1 – Underground CAM Configuration

Chapter II
Table of Contents
Subsystem RM02, Fixed Air Samplers (FAS)

1.0 PRIMARY FUNCTIONS 1
2.0 DESIGN REQUIREMENTS 1
2.1 General Design Requirements 1
2.2 Subsystem General Requirements 1
2.3 Operational Requirements 2
2.4 Structural Requirements for the RMS 4
2.5 General arrangement and Essential Features 4
2.6 Maintenance 5
2.7 In-Service Inspection 5
2.8 Instrumentation and Control Design Requirements 5
2.9 Interfacing Systems 5
2.10 Quality Assurance 5
2.11 Codes and Standards 5
2.12 Reliability Assurance 5
3.0 DESIGN DESCRIPTION 5
3.1 Summary Radiation Monitoring System (RM00) 5
3.2 Detail System Description 6
3.3 System Performance Characteristics 7
3.4 System Arrangement 8
3.5 Component Design Description 9
3.6 Instrumentation and Control Information 11
3.7 System Interfaces 11
4.0 OPERATION 11
5.0 SYSTEM LIMITATIONS, SETPOINTS, AND PRECAUTIONS - RM00 11
5.1 System Limitations 11
5.2 Setpoints 11
5.3 Precautions 11
6.0 OFF-NORMAL EVENTS AND RECOVERY - RM00 12
7.0 MAINTENANCE - RM00 12

List of Figures

RM02, Fixed Air Samplers

Figure RM II-1 - Fixed Air Sampler 13
Figure RM II-2 - Mechanical FCP System 14
Figure RM II-3 - Mechanical FCP System 15
Figure RM II-4 - FAS Skid 16

Subsystem RM02, Fixed Air Samplers

1.0 PRIMARY FUNCTIONS

Refer to Section 1.0 of Chapter G for the primary radiation monitoring functional requirements.

2.0 DESIGN REQUIREMENTS

2.1 General Design Requirements

Refer to Section 2.1 of Chapter G for the general design requirements.

2.2 Subsystem General Requirements

2.2.1 Fixed Air Samplers

Air sampling equipment shall be provided to enable positive identification of air borne radioactive particulates by laboratory analysis.

The FASs shall provide for air to be drawn through fixed filters by a vacuum system. Particulate radioactivity collected on the filters shall be counted after natural alpha emitting isotopes, especially radon, have decayed. This delayed counting approach provides good sensitivity to small releases of radioactivity.

Fixed samples shall be collected from all areas where personnel may be exposed to airborne radioactivity to a) detect the presence and movement of airborne radioactivity; b) assure that airborne radioactivity levels are commensurate with ALARA practice; and c) provide a record of airborne radioactivity in the facility as a function of time.

Fixed air samplers shall take samples from the Hot Cell exhaust between the lower Hot Cell and the HEPA filters to provide an indication of airborne activity that may have been released in the Hot Cell.

2.2.1.1 The location of FAS units shall be determined to satisfy the following:

FAS units shall be installed to favor the detection of moving airborne radioactive particles. This should take into account the direction of airflow, movement of people and the nature of equipment and operations in an area.

FAS units may be installed near air exhaust ducts to obtain an integrated average of room conditions.

The orientation of the filter media shall be selected to maximize airborne particulate trapping while minimizing gravity deposition. Typically this calls for the filter media surface to be vertical with horizontal airflow through it. FASs that monitor air using an in-line filter holder may be oriented for vertical airflow.

2.2.1.2 The sample period, the sample flow rate and the sensitivity of the counting equipment shall be selected to achieve maximum overall sensitivity for the system.

2.2.1.3 During periods when work with a potential for releasing airborne radioactivity is being performed in an area, the sample period shall be adjusted to accomplish the following:

- Provide timely identification of airborne radioactivity.
- Document the airborne radioactivity status of the area.

2.2.1.4 The FAS units located U/G shall each have a local vacuum pump. The surface FAS units shall either make use of the central vacuum system by connection at a local isolation valve of the central vacuum system or have their own vacuum pump.

2.3 Operational Requirements

2.3.1 Fixed Air Samplers

2.3.1.1 Filter

The filter shall be a membrane type, capable of withstanding a flow rate up to 3 scfm.

The filter pore size shall be selected to retain good particle collection efficiency, maintain a low pressure drop, and be compatible with the type of radiation being measured.

The pressure drop across the filter shall not exceed 2 inches of mercury (0.982 psi) at nominal flow for a clean filter.

2.3.1.2 Filter Holder

An open filter holder used for area monitoring shall be positioned so that the filter is vertical to minimize gravity deposition, the airflow to the filter is unimpeded, and the filter is positioned so that a representative sample is obtained. An in-line filter holder may be oriented for vertical flow.

The filter holder shall have a corrosion resistant porous backing screen or plate.

The filter holder shall be designed to insure a uniform positive seal between the filter media and the filter holder.

The maximum differential pressure drop across the filter holder shall not exceed 10 inches of mercury (4.91 psi) at nominal flow.

The filter holder shall not reduce the active collection area of the filter by more than 15% and shall not cause any localized buildup of material on the filter.

2.3.1.3 Flow Regulation

Airflow regulation shall be accomplished by a regulator that has an adjustable flow rate range of 0.5 to 2.0 scfm.

Normal air sampler operating airflow rate shall be 1.0 scfm.

Flow regulator shall operate from a negative header pressure of at least 12 inches of mercury.

Flow regulator shall maintain a constant flow rate of ±10% of the normal operation airflow through filter paper for pressure drops across the filter paper of up to 10 inches of mercury.

A pressure indicator shall be provided to measure the vacuum at the vacuum side of the filter holder as an aid to detect a plugged filter.

A flow indicating device shall be provided to measure the flow rate through the filter paper with an accuracy of ± 10% of full scale at the normal flow rate.

Flow calibration procedures shall be included in a document controlled by Maintenance. If special calibration tools are required, one set of such tools shall be furnished.

A pressure indicator shall be provided to measure the vacuum pressure regulated by the vacuum pressure controller with a range of 0 to -30" mercury with an accuracy of 1.5% of full scale or better.

2.3.1.4 Procedures shall be developed and followed for the following:

To ensure that the filter media replacement and delivery of used filters to analysis laboratory can be performed without contamination or loss of samples.

To permit analysis of the filter to be performed by either the WIPP Radiochemistry or Low Level Counting Laboratories or by an accredited off-site laboratory.

To define the sample period as a function of facility operating condition and mode during work periods involving handling materials or equipment when a high potential for generating airborne radioactivity is expected, the sample period shall be shortened to document the airborne radioactivity and provide timely identification of airborne radioactivity.

To provide periodic verification of the operability of the local UPS.

2.4 Structural Requirements for the RMS

Refer to Section 2.4 of Chapter G for the general structural and materials requirements.

2.4.1 Fixed Air Samplers

2.4.1.1 Tubing shall be provided to interface the air sampling stations supplied from the plant vacuum system to the vacuum line isolation valve provided in the building.

2.4.1.2 Equipment shall operate indoors in surface facilities under the following conditions:

- Operating Temperature 40-120 F
- Relative Humidity 1-99% 77 F Wet bulb
- Airborne Salt Dust Level 2 mg/m^3 maximum

2.5 General arrangement and Essential Features

A means of attaching a calibration sensor shall be provided and the flow calibration procedures shall be such that they can be performed by WIPP personnel.

Refer to Section 2.5 of Chapter G for general location requirements and related constraints.

2.5.1 Surface mounted FAS shall be a basic FAS assembly that shall consist of:

- A filter
- A quick disconnect filter holder or connections to interface with other devices requiring regulated flow
- A means to measure differential pressure across the filters
- A means to measure flow
- An airflow regulator

- Tubing to connect the components together and to connect to the vacuum source
- A means to measure regulated vacuum pressure
- A vacuum pressure controller
- The mounting base plate shall be suitable for both mounting onto an existing wall or onto upright stations on a skid

2.5.2 The U/G FAS shall consist of a standardized steel skid containing:

A basic FAS assembly mounted to upright stations on the skid.

A vacuum pump mounted on the skid or in the vicinity and plumbed to the basic FAS assembly or assemblies;

A battery operated power source mounted on the skid to drive the pump in case of loss of input power;

A power distribution box mounted on the skid.

2.6–2.12 Cross-Reference

Refer to Chapter G for the general program requirements regarding the following SDD topics:

2.6 Maintenance

2.7 In-Service Inspection

2.8 Instrumentation and Control Design Requirements

2.9 Interfacing Systems

2.10 Quality Assurance

2.11 Codes and Standards

2.12 Reliability Assurance

3.0 DESIGN DESCRIPTION

3.1 Summary Radiation Monitoring System (RM00)

Refer to Section 3.1 of Chapter G for radiation monitoring summary descriptions.

3.2 Detail System Description

3.2.1 FASs utilize a filter holder, a filter, an airflow measuring instrument, a vacuum source, an airflow regulating system, and a pressure indicating device to collect a sample of particles suspended in the air.

3.2.2 Air from the area of concern is drawn through the filter by a vacuum system. The filters are removed on a routine basis and the deposits on the filters are analyzed with laboratory instruments. FAS units above ground obtain their vacuum from the plant vacuum system or self-contained vacuum pumps. FAS units U/G are all equipped with their own vacuum pump.

3.2.3 All self-contained vacuum FAS units (except units 49 and 50) are provided with an SPS to assure continued operation of the vacuum source for 30 minutes in case of power failure. The 30 minutes is based on being able to start the WIPP site backup diesel generators in that time period.

3.2.4 The units are supplied with a sealed cabinet for the inverter power supply and the control circuitry.

3.2.5 The vacuum pump FASs are provided with input filters for the vacuum pump and an exhaust muffler connected to the outlet of the vacuum pump. A vacuum relief valve is provided to protect the vacuum pump in case of a flow blockage or a clogged filter.

3.2.6 FASs are provided in the WHB (Bldg 411), the Support Building (Bldg 451), the TRUPACT Maintenance Facility (Bldg 412), the Exhaust Filter Building (Bldg 413) and in the U/G. Within each of these areas the FASs are located to sample air where personnel may be exposed to airborne radioactivity or to facilitate detection of airborne radioactivity in areas which are difficult to monitor using other means. See Appendix F-2 for the FAS locations. Information concerning the flow through the FAS filters and the differential pressure across the filters is only available locally.

3.2.7 Typical FAS stations are shown schematically on Figure RM II-1 and RM II-2.

3.2.8 Air is drawn by the vacuum source through the filter holder, the pressure reducing regulator, flow adjustment valve, the flow meter, the vacuum pressure controller and finally through the pressure safety valve (PSV).

3.2.9 During calibration, with a clean filter installed, the pressure reducing regulator is adjusted to obtain the maximum flow range.

3.2.10 The flow meter and pressure reducing regulator operate using regulated operating vacuum pressure. This operating vacuum pressure (reference

pressure) is controlled by the vacuum pressure controller. The vacuum pressure controller is adjusted until the flow meter and the Measuring and Test Equipment (M&TE) Mass Flow meter indicate the same during calibration. When the pressure reducing regulator maintains the differential pressure across the inlet of the flow adjustment valve and the pressure reducing regulators vent port, it effectively regulates the airflow through the sample filter paper.

3.2.11 On units with a vacuum pump, valve PSV is a vacuum relief valve. If the flow path becomes clogged, PSV will allow air to be drawn into the system so that the vacuum pump will not overheat due to low airflow. The vacuum pump and V3 valve may be located at a different location when the FCP is used for supplying regulated airflow to other devices like Portable CAMs at the WHB docks.

3.2.12 The airflow through the filters is normally set at 1 scfm.

3.2.13 With flows of 1 scfm, flow is maintained within approximately 10% with pressure drops across the filter holder up to 10 inches of mercury.

3.2.14 All FAS filter heads are installed so that the filter paper is vertical to minimize the effect of gravitational deposits.

3.2.15 There are portable FAS units that can be positioned in an area to collect air samples. They are complete FAS units that need only be connected to a 120 VAC, 60 Hz power source to function. These units can be used to supplement or replace the permanently installed units as required.

3.3 System Performance Characteristics

3.3.1 Normal Operations

3.3.1.1 The FAS units provide historical data and positive identification of radioisotopes which are airborne particulates or are carried by airborne particulates.

3.3.1.2 The filter elements are routinely changed and monitored as established by WIPP procedure. No filter will remain in active use for more than one week. Filter residence time is determined to assure that the expected dust loading will not significantly reduce the alpha count rate.

3.3.1.3 After a sufficient holdup time to permit the decay of radon, the filter alpha and beta count is determined and recorded in the laboratory logs. If the activity is more than levels established by WIPP procedure, then the Radiation Safety Supervisor and the Waste Handling Supervisor are notified of the reading in accordance with approved plant procedures. The Radiation Safety Manager and the Waste Handling Manager will then take action to assure the safety of the public and of site personnel. Such actions may include having a

spectrographic analysis performed on the filter by the WIPP Low Level Counting Laboratory to determine whether transuranic elements are present, evaluating previous site activity in the area, and taking smears in the area and counting them to determine the magnitude of the problem and establishing mitigating actions if required.

3.3.1.4 In order to reduce maintenance those FAS units located in areas in which there is no risk of contamination are taken out of service. The identification of each unit out of service and the resulting limits on operations are controlled by Radiation Safety.

3.3.1.5 Four FCPs are located at the WHB docks (2 per dock) that use either plant vacuum or a 1 hp vacuum pump. Plant vacuum or each local dock vacuum pump supplies vacuum pressure to two FCPs, which are connected to dock CAMs.

3.3.2 Off-Normal Conditions

When off-normal air sampling conditions are indicated by one or more CAMs, the FAS filters in the area will be promptly replaced, and analyzed to provide further information.

3.3.3 Infrequent Operations

There are no infrequent operations identified for this system.

3.4 System Arrangement

3.4.1 FAS System Arrangement

3.4.1.1 The location of the FAS intakes is based on extensive smoke tests that provided evidence of airflow patterns within the WHB and in the U/G storage area.

(See, "Airborne Radiation Monitoring Equipment Siting Studies in the CH Bay Area and U/G at the Waste Isolation Plant." Report No. as referred to in letter DA:95:2621, dated 10/26/1995, ECP#1-RM96-021).

This was accomplished to determine the best placement of the sample heads to collect representative samples of the airborne contaminants.

Locations may also be determined by the Radiation Control Manager to facilitate area monitoring.

3.4.1.2 The area FASs are configured in three different piping schematic arrangements. One arrangement is with the vacuum source being the PVS. One arrangement is with the vacuum source being supplied by a vacuum pump. The last arrangement is with either the plant vacuum or a vacuum

pump. The Figures RM II-1 through RM II-3 show the component arrangements.

Figure RM II-1 shows a Fixed Air Sampler using plant vacuum.

These are FASs predominately used aboveground.

Figure RM II-2 shows a FAS with a self-contained vacuum source.

FASs used U/G (14 units), the Exhaust Filter Building 412, and the WHB have a self-contained vacuum source. Refer to Appendix F-2 for FAS assignment identification.

Figure RM II-3, Mechanical FCP (modified FAS), with a self-contained vacuum source and connected to plant vacuum.

FCPs used at the docks (4 units) have two self-contained vacuum source with a manual valve to allow switching between plant vacuum and the local dock vacuum pump.

3.5 Component Design Description

3.5.1 Component Design Description FASs

3.5.1.1 The filter housing for FASs used for area monitoring is approximately 2.5 inches in diameter. It has a screw on cover so that the filter paper can be easily removed and installed.

3.5.1.2 The filter papers used for the in-line FASs are approximately 2.5 inches in diameter. The filter holder has a stainless steel clamshell enclosure which houses a plastic filter cartridge and has connections for a sample line on one end and a vacuum line from the FAS assembly on the other.

3.5.1.3 The filter papers used in the FASs are designed to collect particles 3 microns or larger. The filters are 47 mm in diameter Versapor 3000 supportive Membrane Filters. They are manufactured with a copolymer deposited on a Nylon mesh for support.

3.5.1.4 The backing plates for the filters in the FASs used for area monitoring are constructed from metal in a honeycomb configuration.

3.5.1.5 The backing plates for the filters in the FASs used for in-line sampling are made from a porous plastic material.

3.5.1.6 The in-line flow gauge is a rotameter with a tapered tube. The higher the flow rate the higher the float will be suspended. This type of flow gauge is affected by temperature and pressure, so the accuracy of the flow reading will be affected by temperature and vacuum on the system. The flow gauge is

approximately a foot long, mounted vertically, and has a range of .2 to 2.0 scfm.

3.5.1.7 The differential pressure gauge is the dial type and has the range of 0 to -30 inches of mercury.

3.5.1.8 The pressure reducing regulator is a mechanical type with a spring and a diaphragm and has an adjustable flow rate range of .5 to 2.0 scfm, using the external manual valve.

3.5.1.9 The vacuum pressure controller is a mechanical type with a spring and a diaphragm that has an adjustable vacuum pressure range of maximum available from the source to 1" mercury.

3.5.1.10 Each FAS Station (Figure RM II-4) with a self-contained vacuum pump has a dust proof cabinet that encloses the control equipment and the power inverter. The vacuum pump uses a ½ horsepower motor and is mounted on the right side of the skid. The cabinet is equipped with a heat exchanger system to remove heat from the cabinet internals without air interchange to the cabinet internals.

3.5.1.10.1 On the front of the dust proof cabinet there is a power on light that indicates power is supplied to the inverter, a circuit breaker that isolates input power from the skid equipment, and start and stop push buttons to start and stop the vacuum pump.

3.5.1.10.2 Inside the cabinet there is a time delay relay that works with the on button to maintain control power to the pump contactor. Upon loss of external power this circuit will assure that the vacuum pump will continue to run after the switch over to inverter power.

3.5.1.10.3 Inside the cabinet is a power inverter that produces DC power to charge the batteries, and will convert the battery DC voltage to AC power to run the vacuum pump if AC power is lost.

3.5.1.10.4 On the back of the cabinet door is a convenience outlet that can be used by maintenance personnel to power small tools or a service light.

3.5.1.10.5 Dock FCP (modified FASs) panels are dual panels interconnected through vacuum supply line that either originates at the dock vacuum pump or plant vacuum. The switch is made at the local plant vacuum isolation valve where an additional valve is there to allow manual switching between plant vacuum or the local dock vacuum pump pressure.

A pump control panel is also located at the docks near the plant vacuum isolation valve to allow local dock vacuum pump control by Waste Handling personnel. At the pump location are a vacuum relief valve and vacuum pump intake filters.

3.5.1.11 The inverter (See Figure RM II-4) associated with the self-contained vacuum pump FASs is mounted inside the cabinet and has 4 indicating lights, two toggle switches, and two breakers mounted on its panel front.

3.5.1.11.1 The four indicating lights provide status indication of the input and output power, the battery charge rate, and the battery condition.

3.5.1.11.2 One of the toggle switches turns the inverter unit on or off. The second toggle switch is an equalizer switch used to apply a high voltage to the batteries to enable them to receive a charge equally. The equalizer switch is not used with sealed batteries.

3.5.1.11.3 The two breakers protect the input circuit and the inverter from excessive loads.

3.6 Instrumentation and Control Information

3.6.1 The indicated flow is controlled locally to 1 scfm ± 10%.

3.7 System Interfaces

Refer to Section 3.7 of Chapter G for the FAS primary and secondary system interfaces.

4.0 OPERATION

Refer to Section 4.0 of Chapter G for RMS operating procedures.

5.0 SYSTEM LIMITATIONS, SETPOINTS, AND PRECAUTIONS - RM00

5.1 System Limitations

The FAS system is used to document and identify radioactive isotopes that may be present in the area. It is important that if an operational FAS unit ceases to function that it be made operational or a substitute unit be positioned to sample the same area.

There are no FAS operating limits because they are on-line sampling systems.

5.2 Setpoints

The flow control system for the FASs utilizes a mechanical pressure reducing regulator and typically the flow is controlled to ±10% of the preset flow rate.

5.3 Precautions

When operating or maintaining the FAS system, personnel should be aware that the filter papers removed from the sample holders are potentially contaminated and should be treated as contaminated until proven otherwise.

6.0 OFF-NORMAL EVENTS AND RECOVERY - RM00

On loss of power FASs connected to plant vacuum are not available until plant vacuum is restored. The FASs in the TMF and Overpack and Repair Room are unavailable on loss of power until power is restored. The remaining FASs have an associated UPS.

7.0 MAINTENANCE - RM00

Refer to Section 7.0 of Chapter G for Maintenance Requirement for RM02.

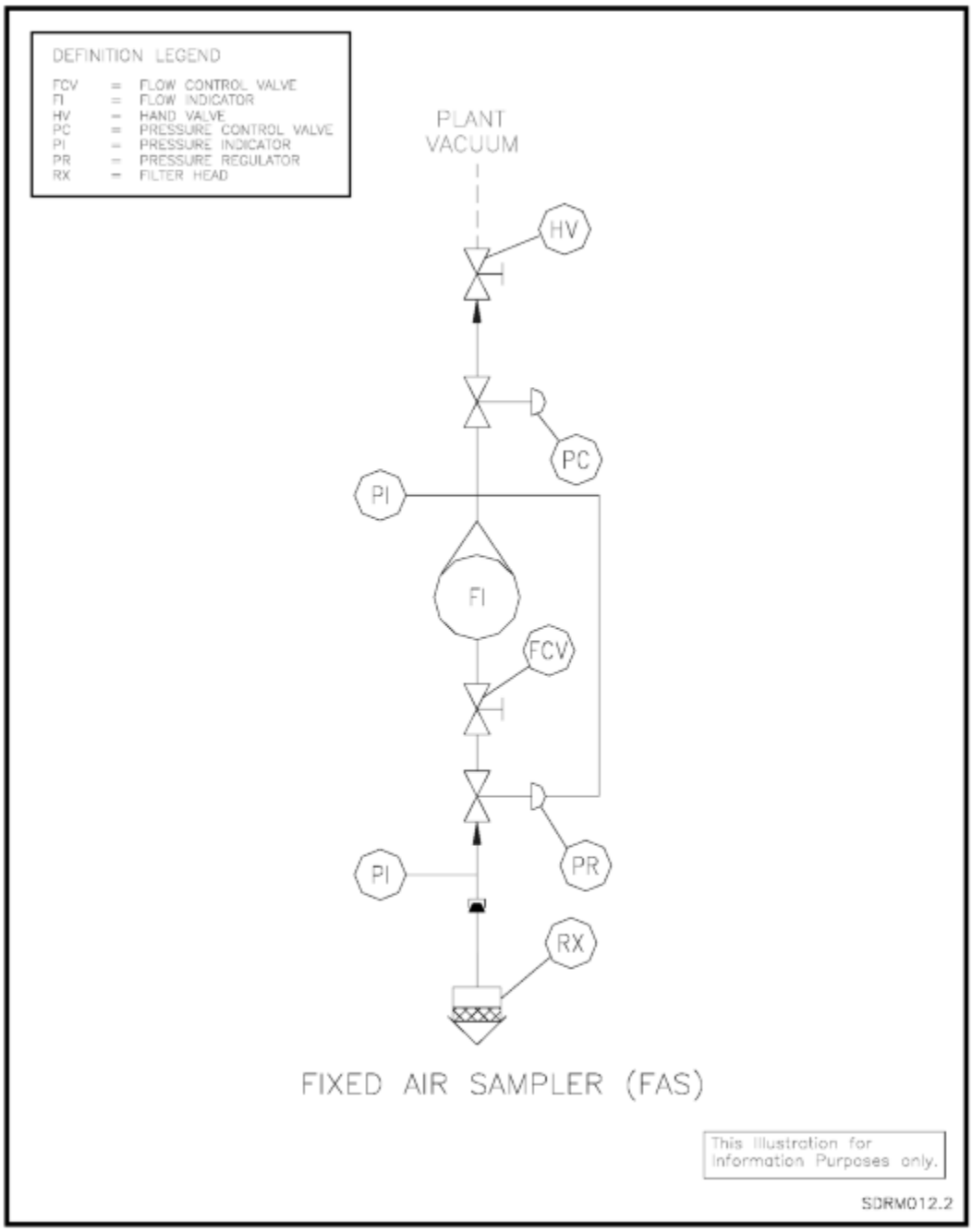

Figure RM II-1 – Fixed Air Sampler

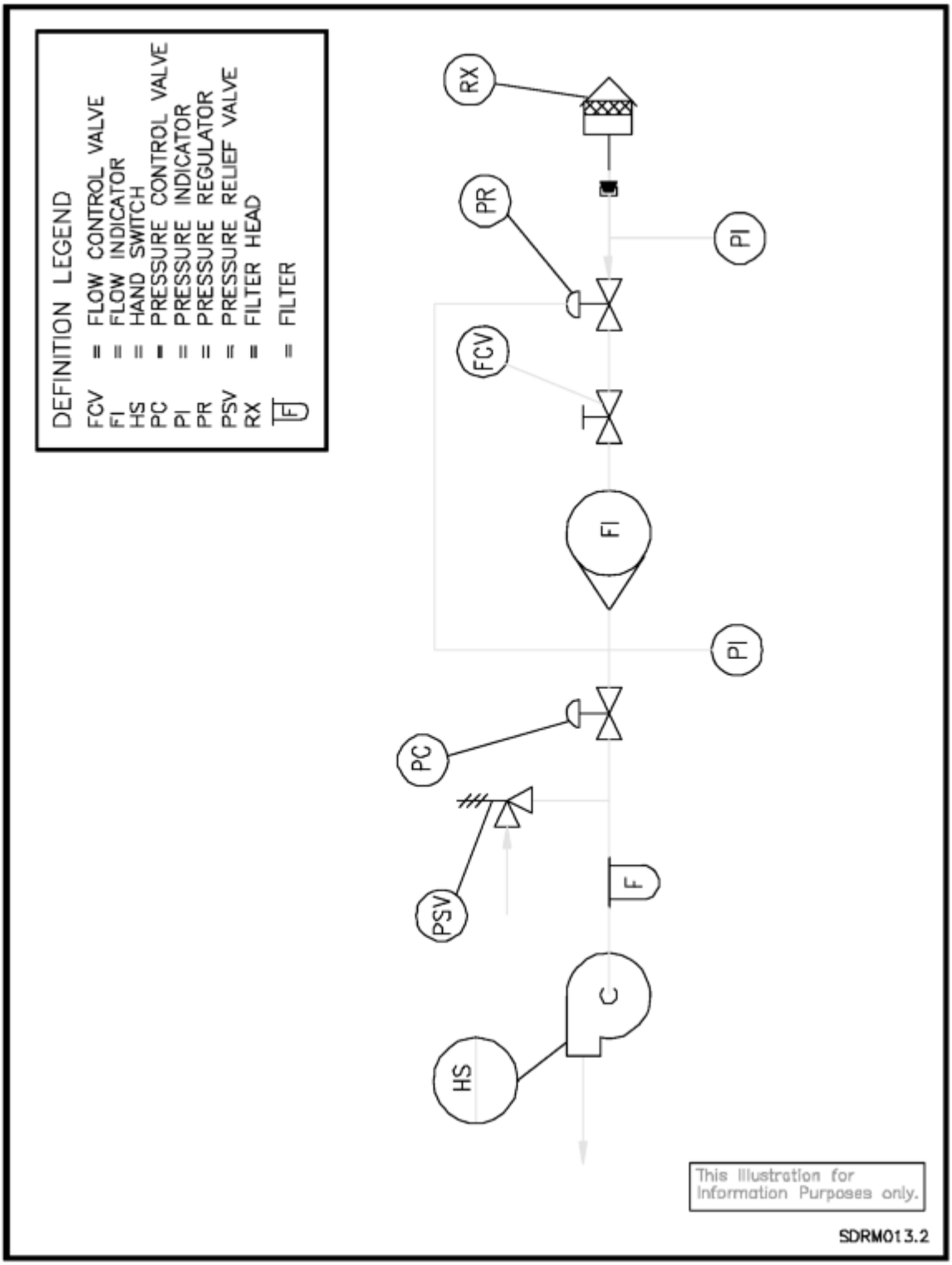

Figure RM II-2 – Mechanical FCP System

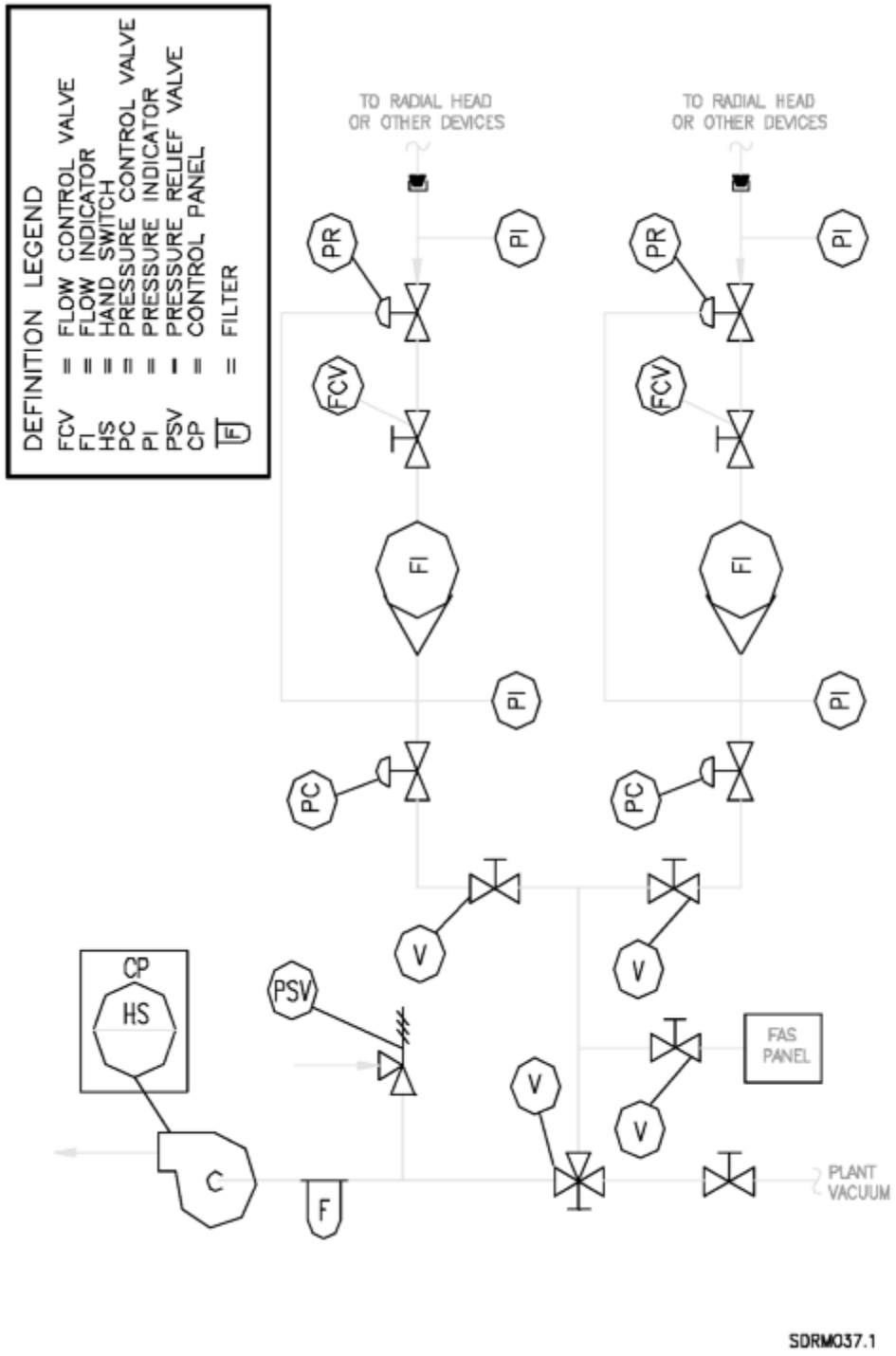

Figure RM II-3 – Mechanical FCP System

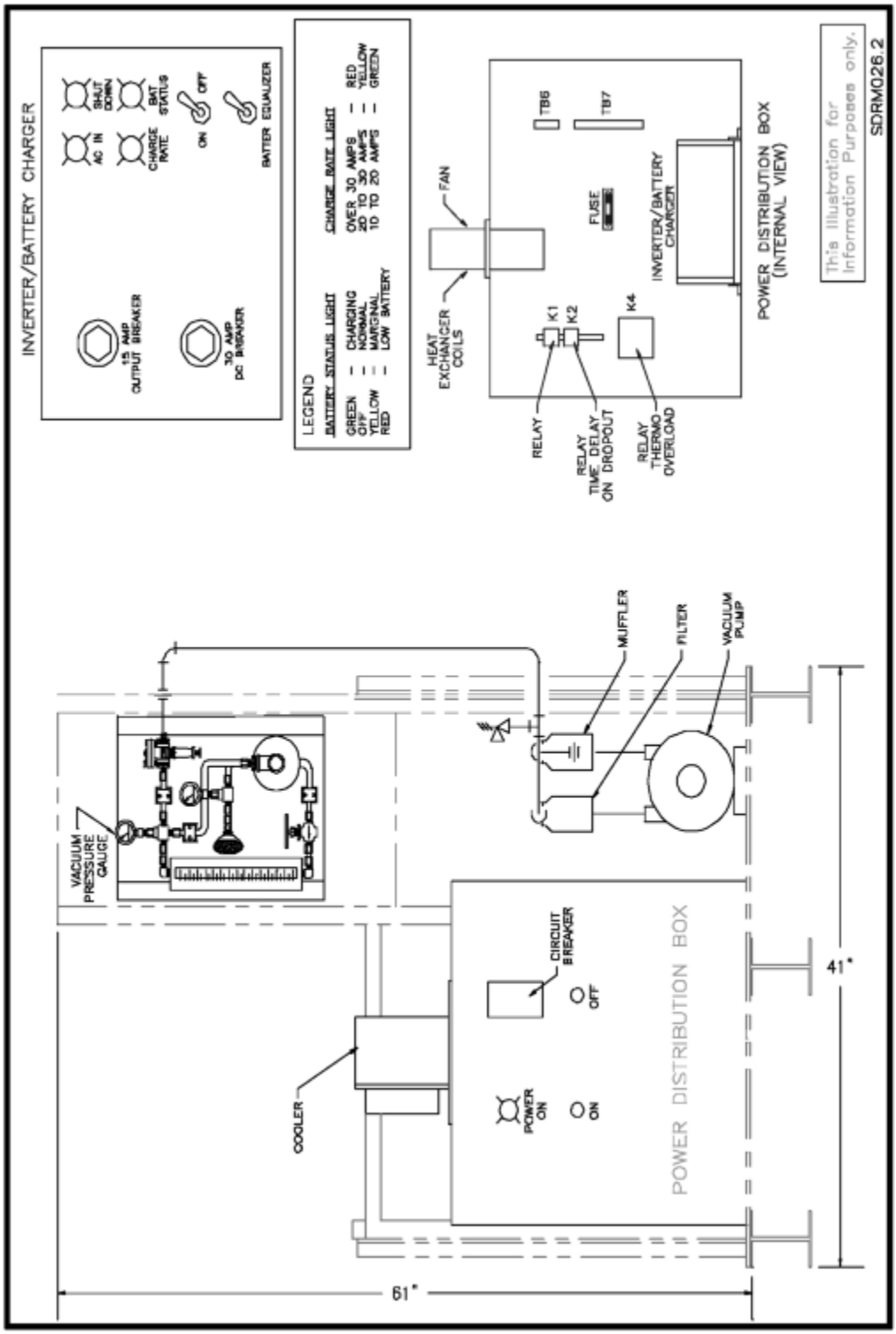

Figure RM II-4 – FAS Skid

Chapter III
Table of Contents

Subsystem RM03, Area Radiation Monitors

1.0 PRIMARY FUNCTIONS 1
2.0 DESIGN REQUIREMENTS 1
2.1 General Design Requirements 1
2.2 Subsystem General Requirements 1
2.3 Operational Requirements 3
2.4 Structural Requirements for the Radiation Monitoring System 4
2.5 General Arrangement and Essential Features 4
2.6 Maintenance 6
2.7 In-Service Inspection 6
2.8 Instrumentation and Control Design Requirements 6
2.9 Interfacing Systems 6
2.10 Quality Assurance 6
2.11 Codes and Standards 6
2.12 Reliability Assurance 6
3.0 DESIGN DESCRIPTION 6
3.1 Summary Radiation Monitoring System – RM00 6
3.2 Detail System Description – RM03 6
3.3 System Performance Characteristics 7
3.4 System Arrangement 8
3.5 Component Design Description 8
3.6 Instrumentation and Control Information 11
3.7 System Interfaces 11
4.0 OPERATION 11
5.0 SYSTEM LIMITATIONS, SETPOINTS, AND PRECAUTIONS 11
5.1 System Limitations 12
5.2 Setpoints 12
5.3 Precautions 12
6.0 OFF-NORMAL EVENTS AND RECOVERY - RM00 12
7.0 MAINTENANCE - ARMs 13

List of Figures

Subsystem RM03, Area Radiation Monitors

Figure RM III-1 - Stand Alone Gamma Detector Electronics/Display Unit 14
Figure RM III-2 - Stand Alone Gamma Detector with External Amplifier and Ion Chamber Detector 15

List of Tables

Table RM III-1 - Radiation Monitor ARM Alarm Setpoints 12

Subsystem RM03, Area Radiation Monitors

1.0 PRIMARY FUNCTIONS

Refer to Section 1.0 of Chapter G for the primary radiation monitoring functional requirements.

2.0 DESIGN REQUIREMENTS

2.1 General Design Requirements

Refer to Section 2.1 of Chapter G for the general design requirements.

2.2 Subsystem General Requirements

2.2.1 Each ARM unit shall operate independently of the others so that failure of a unit does not imply failure of any other unit.

Gamma measurement equipment shall be provided to enable a periodic determination of the radiation status of the RH section of the plant and to alarm for conditions of potential radiological hazard.

2.2.2 Some of the ARMs are provided as an optional external gamma detector on some of the RH CAMs.

2.2.3 RMS gamma monitoring shall be provided in selected locations to:

2.2.3.1 Detect, measure and annunciate locally and remotely the occurrence of predetermined gamma radiation levels near radioactive waste handling and traffic routes.

2.2.3.2 Provide warning of a loss of shielding effectiveness.

2.2.3.3 Provide a display, both locally and in the CMR, of radiation levels at strategic locations throughout the RH processing area to monitor the radiation levels and assist in meeting the ALARA objective at WIPP.

2.2.3.4 Provide historical records of gamma levels in the facility through the CMS.

2.2.3.5 Provide radiation monitoring of the RH cask unloading room and provide a high alarm signal output to the Waste Handling System to inhibit opening the 140-ton door. The Hi alarm also turns on a radiation warning sign for the door entrance of the hot cell lower level (door 149) and enables an alarm circuit which activates an alarm circuit. If the door is inadvertently opened when the ARM alarm is on, a local buzzer and red alarm light comes on, and an alarm signal is sent to the CMS.

2.2.4 The data obtained from the instrumentation comprising the ARM subsystem shall be available to the CMS for recording and to the CMR operator for display on demand of all stationary radiation monitors using the Operator Workstation and operator initiated hard copy printouts from the CMS line printer.

2.2.5 Each ARM shall include the following functions:

Continuous monitoring and measurements of the local gamma radiation level with a range of at least 3 decades above background.

Local readout of the measured gamma level.

Transmission of the measured gamma level and alarms to the CMS to be recorded/and optionally displayed.

Three locally adjustable alarm setpoints, a Low alarm level, an Alert alarm level, and a Hi alarm level some of which may not be used.

One Fault alarm that alarms if the detector readings decrease to zero for a predetermined period of time or if the several self-test detects any of several other parameters out of tolerance.

Local visual and audible alarms for each of the alarm functions.

Transmittal of the alarm and Fault signals to the CMS to alarm in the CMR and to be recorded.

2.2.6 The High alarm, Alert alarm, and the Fault alarm shall not operate if the ARM unit is switched off.

2.2.7 ARMS shall be installed and made ready for use as determined by Radiation Engineering and Radiation Control. Portable radiation monitoring equipment may be used in place of an ARM unit provided that the portable unit has the same or better detection capability than the normal ARM unit in that location and is continuously monitored by Radiation Control.

2.2.8 The location of ARMs required to be continuous operation shall be determined by means of the following criteria.

The ARM system shall detect any significant loss of shielding effectiveness. A significant loss of shielding effectiveness is one which increases the local gamma radiation intensity to a level which is greater than ALARA.

The ARM system shall provide the ability to monitor the radiation levels of the facility by placement of the detectors in areas which have the possibility of joint occupation by radiation sources and personnel. This is to assist in meeting the ALARA objective.

The ARM system shall provide signals for door interlocks and warning indication for areas that are expected to experience elevated radiation levels during portions of the normal waste handling process.

2.2.9 The ARM systems shall be designed for continuous operation with a 25-year useful life. Where the design life cannot be achieved for specific components, such as the detector, the design life will be extended to 25 years by applying written maintenance procedures. Components which cannot be designed for full system design life, including seals, gaskets and lubrication shall have a minimum design life of 5 years and be easily replaced in situ. All components that require periodic replacement or service shall be identified by an effective PM replacement program.

2.2.10 The electrical systems for the permanently installed ARMs shall meet the following requirements:

The power supply for ARMs shall be 120 VAC ±10%, 60 Hz ±3%, and single-phase.

The input power shall be from the plant UPS system.

2.2.11 With the exception of internally generated high voltages, there shall be no potentials greater than nominal 120 VAC connected to or existing within any instrument enclosures normally accessed by Health Physics or Instrument personnel.

2.2.12 The power source connections shall be separated from signal connections and connected to terminal blocks with sufficient separation and/or barriers to prevent accidental cross-connection.

2.2.13 To provide for system modification, expansion, and damage, each Input and output signal cable and its associated connector shall be installed with ten percent spare conductors and connector terminals (pins), except for coaxial and high-voltage conductors.

2.2.14 The circuits wired to terminal blocks for external connection shall be grouped to allow for termination of all conductors of each incoming cable on adjacent terminals.

2.3 Operational Requirements

2.3.1 The alarm setpoints used for personnel protection shall be set and controlled by an approved procedure and based on the classification of "Radiation Area" and a "High Radiation Area" in 10 CFR Part 835. The alarm setpoints used for access control shall be set to ensure that the interlocks and door alarms are activated.

2.3.2 In an area that the normal radiation level is significantly below the "Radiation Area" level, one alarm level shall be set at a level to identify that the "Radiation Area" level is being approached. Another alarm setpoint shall indicate that the "High Radiation Area" level is being approached.

2.3.3 In an area where the normal radiation is expected to be elevated during waste handling, an alarm shall be set to identify that the level has increased to a point where personnel should not remain in or enter the area and persist until the RH waste processing has been completed and the radiation level has returned to normal.

2.3.4 In an area where the radiation level is not expected to be elevated during normal processing an alarm shall be set to inform personnel and management of an unexpected radiation level and cause the area to be evacuated until Radiation Control can determine the cause of the elevated level and corrective action can be taken.

2.3.5 The ARMs shall have all internal measurement signal circuits designed to minimize spurious response to electrical noise and the outputs to remote readouts shall be able to function in high electromagnetic fields.

2.3.6 Monitoring instrumentation and control systems of the ARM shall be designed so that the system automatically assumes a safe mode in the event of a failure of part of the system.

2.4 Structural Requirements for the Radiation Monitoring System

Refer to Section 2.4 of Chapter G for the general structural and materials requirements.

2.5 General Arrangement and Essential Features

Refer to Section 2.5 of Chapter G for general location requirements and related constraints.

2.5.1 Each ARM shall have the following response characteristics:

The digital readout in the CMR shall be within 10% of the local reading.

Each ARM shall have a response time such that the analog readouts indicate 90% of the actual value within 6 seconds after any step change in radiation level. Also, the alarm shall be actuated within 1 second after the radiation level reaches the value of the alarm setpoint.

Each ARM readout shall not vary more than ±2% per year caused by detector exposure to a constant radiation level at the average of the lowest and highest scale values.

All ARM radiation monitors shall produce a full scale reading when subjected to radiation fields higher than full scale. The monitor shall be protected against over-range such that the operation and calibration are unaffected subsequent to over-range conditions.

Each ARM unit detector assembly shall consist of three components: detector, amplifier, and display/electronics cabinet. The detector and/or the amplifier may be inside of the display/electronics unit.

2.5.2 The ARM detector shall meet the following:

- Area radiation monitors shall utilize gamma detectors to detect ambient gamma radiation.
- Detectors shall be gamma sensitive with a dynamic range of 10 microRem/hr to 10 Rem/hr or 10 milliRem/hr to 10,000 Rem/hr depending on location.
- The characteristics of the detector or a provided holdup source shall provide a continuous low level signal. This signal shall be used to determine that all of the channel circuits are operating and loss of the signal shall actuate a circuit failure or fault alarm.
- The radiation level reading shall not vary more than ±10% from the average value when the detector is exposed to a point source from any direction.
- The detector response must be proportional to the actual gamma radiation level within ±25% for energies between 70 keV and 7 MeV.

2.5.3 The ARM shall be housed in an environmental enclosure and shall be provided with the brackets or fixtures for wall mounting.

2.5.4 Alarm Signals for ARMs

2.5.4.1 The ARM shall include at least the following radiation and malfunction alarms:

An Alert radiation alarm that can be set at any point in the measurement range.

A High radiation alarm that can be set at any point in the measurement range.

A Low radiation level alarm as part of the fault indication and alarm.

Each alarm shall have a separate indication of the local display.

2.5.4.2 The alarms shall not operate if the ARM is switched "off."

2.5.4.3 The alarm outputs shall be electronically controlled using digital circuits and shall be capable of being set at any value of the function range from the local control panel.

2.5.4.4 The mute button on the front panel shall cause the local (field) audible alarm to cease and not affect the local visible alarm indication.

2.5.4.5 Provision shall be made to enter the alarm setpoints by local entry.

- Hi alarm setpoint
- Hi-Hi alarm setpoint

2.5.4.6 The audible alarm shall provide a level of at least 75 decibels at 6 inches at a solid angle of 15 degrees from the horn.

2.6–2.12 Cross-Reference

Refer to Chapter G for the general program requirements regarding the following SDD topics:

2.6 Maintenance

2.7 In-Service Inspection

2.8 Instrumentation and Control Design Requirements

2.9 Interfacing Systems

2.10 Quality Assurance

2.11 Codes and Standards

2.12 Reliability Assurance

3.0 DESIGN DESCRIPTION

3.1 Summary Radiation Monitoring System – RM00

Refer to Section 3.1 of Chapter G for radiation monitoring summary descriptions.

3.2 Detail System Description – RM03

3.2.1 The ARMs are instruments that are used to monitor gamma radiation in areas where such radiation areas are possible in the facility. They are used to warn personnel in the area of gamma radiation levels above the set point. The

ARMs are used in conjunction with the CMS to provide a record of area radiation levels so that historical levels and trends may be evaluated to assist in the proper management of the radiation exposure of personnel on-site.

3.2.2 The ARM units are located above ground in the RH processing area. See Appendix F-3 for ARM locations.

3.2.3 The ARMs require AC power for normal operation and alarms. If the AC power fails for less than 5 seconds the ARM will function normally. If the power failure lasts more than 5 seconds the instrument will switch to internal battery power. The internal battery power will last for approximately 15 minutes (30 minutes for the CAMs with gamma option). During the time that the unit is on battery power it will emit a constant alarm tone and the green beacon light will flash. In addition the **NORMAL** status LED on the front panel will extinguish and the **AC FAULT** LED will be lit.

3.3 System Performance Characteristics

3.3.1 Normal Operations

3.3.1.1 There shall be an ARM at each of the following RH area locations

- Cask Prep Station
- Cask Unloading Room
- Facility Cask Loading Room

3.3.1.2 Inspection of equipment shall be provided to verify operational capability monthly and after maintenance is performed on the unit. The remaining ARM locations are provided to provide strategically effective records of the pattern of gamma radiation within the facility. This provides a valuable contribution to the defense in depth and to achieving ALARA objectives by allowing detection of small problems before they become significant to health.

3.3.1.3 For any ARM, the alarm setpoint may be adjusted to a higher level to compensate for a known high radiation source in the area, but shall be reset to the original setting after the source is removed and prior to resumption of further waste handling operations in the affected area. Changes to setpoints shall be controlled by approved procedures.

3.3.1.4 Alarms from the installed ARM are annunciated locally and in the CMR. Most of these the alarms serve to alert nearby personnel and, through the CMR, supervision to the fact that a potential hazard exists and that the appropriate actions should be taken. For areas where this level of radioactivity is unexpected, this action shall consist of evacuating the area and requesting Radiation Control to take action to resolve the problem.

3.3.1.5 The Hi alarm from ARM 041C in the Cask Unloading Room is used only during the processing of 10-160B shipping containers. It provides access control to the CUR which is expected to have an elevated radiation level during the unloading of the 10-160B. This alarm is connected to the airlock access door interlock system to inhibit opening of the 140-ton door. When an elevated radiation level is present. The alarm also activates circuits to illuminate a caution sign next to door 149 to indicate the presence of exposed RH waste containers and enable a door switch activated audible and visual alarms, which activate if door 149 is inadvertently opened. Opening door 149 when the door alarm circuit is enabled also sends an alarm signal to the CMS for display in the CMR.

3.3.1.6 In order to reduce maintenance and minimize false alarms, those ARMs which are not required for the waste handling process currently in progress are taken out of service.

3.3.2 Off-Normal Operations

3.3.2.1 Portable radiation monitoring equipment may be used in place of a fixed ARM if the ARM is determined to be inoperable during RH waste processing and the following criteria are met:

- It is capable of detecting and providing the same local alarm capability as the fixed equipment;
- It is located in the immediate vicinity of the ARM being replaced; and
- The portable equipment can be monitored by a Radiation Control Technician while the process monitored by the equipment is in progress.

3.4 System Arrangement

3.4.1 ARMS Arrangement

3.4.1.1 All of the ARMs are installed in the RH waste area. See Appendix F-3 for ARM locations.

3.5 Component Design Description

3.5.1 Component Design Description for RH Support ARMs

3.5.1.1 There are two different uses for gamma detectors in radiation monitoring at WIPP. One use of a gamma detector is in conjunction with a beta detector and is used to correct the beta reading in a CAM. The second use is in a gamma detector used solely to detect gamma field strength in the area in

which the unit is located. The units which use the gamma detector in this manner are defined as area radiation monitors or ARMs.

3.5.1.2 There are two different ARM units at WIPP. One is a stand alone gamma detector. The other is an external gamma detector which is an optional feature on certain CAMs. The stand alone gamma detectors use an ion chamber to detect the gamma radiation. The optional external gamma detector on a CAM uses an ion-implanted silicon detector to detect the gamma radiation.

3.5.1.3 The stand alone gamma detectors have a range of 100 microSv/hr to 100 Sv/hr (10 mRem/hr - 10,000 Rem/hr). These units are used primarily to provide gamma radiation field strength information in areas that are expected to have elevated gamma radiation fields during waste processing.

3.5.1.4 The external gamma detectors on the CAMs have a range of 0.1 microSv/hr - 100 mSv/hr (10 microRem/hr - 10 Rem/hr). These units are primarily used for personnel protection in areas where elevated gamma levels are not expected to be elevated during waste handling.

3.5.1.5 For a detailed description of the functions of the CAMs with the external gamma detector option see RM05, Section VII of this SDD. The following description applies to the stand alone gamma detector (ARM):

3.5.1.5.1 The ARM in the CUR has a display/alarm unit that is wall mountable. This unit has an analog meter, a two line digital display screen, alarm and status lights, an audible alarm and mute, reset and scroll buttons on the front panel. An alarm/status beacon is located on top of the display/alarm unit which has a red and a green light. The unit has a 4 to 20 mA output for the gamma field strength and two relays each for Alert, Hi and Low/Fault Alarm signal outputs. The digital display and the analog output can be configured for multiple ranges and engineering units. The analog meter can only display the field strength in microsieverts per hour and has a logarithmic scale. This scale is not consistent with any other plant operation. However, the unit is located in an area which is expected to have an elevated radiation level during the normal process evolution in which it is used and there will be no plant personnel allowed in the area. Therefore, no one will read the front panel displays when the unit is in use and there is currently no need to have the analog display maintained or calibrated.

3.5.1.5.2 Two displays indicate the dose rate:

- A moving coil analogue meter with a 6-decade log scale that can be viewed from some distance.

- A 16-character x 2-line LCD provides a more precise indication of the dose rate.

The LCD is permanently backlit for easy viewing. Both displays will indicate the current alarm level set-point when the corresponding membrane key (low, alert or high) is pressed and held. After a display period of 5 seconds the displays will revert to the current dose rate. The LCD also indicates the current system parameters when the SCROLL DATA membrane key is pressed.

3.5.1.5.3 The gamma detector for these ARMs is connected to an amplifier which is separate from the display/alarm unit. The cable between the detector and the amplifier is 10 meters long. The amplifier is connected to the display/alarm unit by a cable which may be up to 50 meters in length. This cable provides both the power for the amplifier and an RS422 signal level interface between the amplifier and the display/alarm unit.

3.5.1.5.4 Upon power up the green beacon lamp and the "normal" front panel lamp are illuminated. The reset button may need to be pressed to clear any "AC fail" fault.

3.5.1.5.5 The configuration of this unit is performed by either using a configuration program, iConfig, loaded in a PC or PDA connected to the unit via an RS232 cable connector on the front panel or by accessing to the parameters through the front panel using the Low, Alert and High front panel buttons and the LCD display as described in the User Guide.

3.5.1.5.6 If an instrument fault is detected the green beacon will flash, the 'equipment fault' relay will operate and a single tone audible alarm will sound. The nature of the fault will be displayed on the LCD. Faults that will be detected are:

- 5V, 12V, or 24V DC line fault
- Low internal battery voltage
- Detector fault (indicated radiation level below the low limit)
- Mains (AC power) failure

3.5.1.5.7 When the area gamma measurement exceeds one of the two (alert or high) alarm limits the lamp on the front panel for that alarm limit illuminates, a dual tone audible alarm sounds and the red beacon flashes. The alarm will reset if the radiation level drops below the setpoint.

3.5.1.5.8 If the mute button is pressed during an alarm condition the audible alarm is silenced and the yellow mute button on the front panel is illuminated. The mute function is removed when either:

- The dose rate falls below the alarm level.
- The RESET key is pressed.
- A higher level alarm is triggered.

3.5.1.5.9 The ARM display/alarm units contain termination strips that can be accessed by opening the front panel and removing a protective cover. These termination strips provide connections for all of the input and output signals for the ARM including the analog and digital (relay) outputs.

3.5.1.5.10 The ARM monitoring the radiation level in the Cask Unloading Room provides a radiation alarm interlock signal which prevents opening the 140-ton shield door when there is a radiation alarm. This alarm signal is also used to illuminate a Caution sign next to door 149 and arm an alarm which will sound locally and in the CMR if door 149 is opened.

3.5.1.5.11 The ARMs are configured to be networked using the intranet. A RadComm unit is attached to each ARM which reads the data from the ARM and transmits it over the intranet in User Datagram Protocol (UDP) packets. PCs running appropriate software are set up to receive, interpret, display, and archive the data.

3.6 Instrumentation and Control Information

See Table III-1 for the system operational setpoints.

3.7 System Interfaces

Refer to Section 3.7 of Chapter G for the ARMs' primary and secondary system interfaces.

The RM03 interface with CM01 is at the CMS LPU terminal. The RM03 UPS is provided by ED00 and is interfaced with the ARM at the power outlet for the ARM.

4.0 OPERATION

The ARMs shall be operated using approved plant procedures.

5.0 SYSTEM LIMITATIONS, SETPOINTS, AND PRECAUTIONS

5.1 System Limitations

5.1.1 There are no ARM system operating limits because it is a passive monitoring system.

5.1.2 The ARMs have a normal operating limit of 32 to 104 degrees Fahrenheit (0 to 40 degrees Celsius) and 0% to 85% relative humidity (noncondensing).

5.2 Setpoints

5.2.1 The ARM alarm setpoints are listed in Table III-1.

Table RM III-1 Radiation Monitor ARM Alarm Setpoints

Note: The CAMs on the Cask Prep Station and in the FCLR have external gamma detectors which function as ARMs.

	**Operating HI Alarm Setpoint	**Operating HI-HI Alarm Setpoint	*** Maximum Setpoint
ARM*			
Cask Prep Sta & CUR	20 mR/hr	N/A	20 mR/hr
FCLR	5 mR/hr	100 mR/hr	100 mR/hr

* The CAMs at the Cask Prep Station and the Facility Cask Loading Room also function as ARMs (i.e., they have external gamma detectors).

** These are the normal operating setpoints allowed without written approval from Radiation Safety Management.

*** These are the setpoints established to meet the requirements of 10 CFR Part 835. Setpoints above those listed must be preceded by written approval from Radiation Safety Management.

5.3 Precautions

5.3.1 When operating or maintaining the area RMS, personnel should be aware that the detectors have high voltages associated with them. The unit should be de-energized before disassembling the detector housing. Radiation Monitoring Equipment may be sensitive to radio frequency interference. Two-way radios shall not be transmitting within 25 feet of the ARM.

6.0 OFF-NORMAL EVENTS AND RECOVERY - RM00

On loss of power, ARMs are supplied from the main UPS and/or internal battery power. When AC power is supplied the reset button must be pressed to clear the “power fail” input to the Fault alarm.

7.0 MAINTENANCE - ARMs

Refer to Section 7.0 of Chapter G for Maintenance Requirements for RM03.

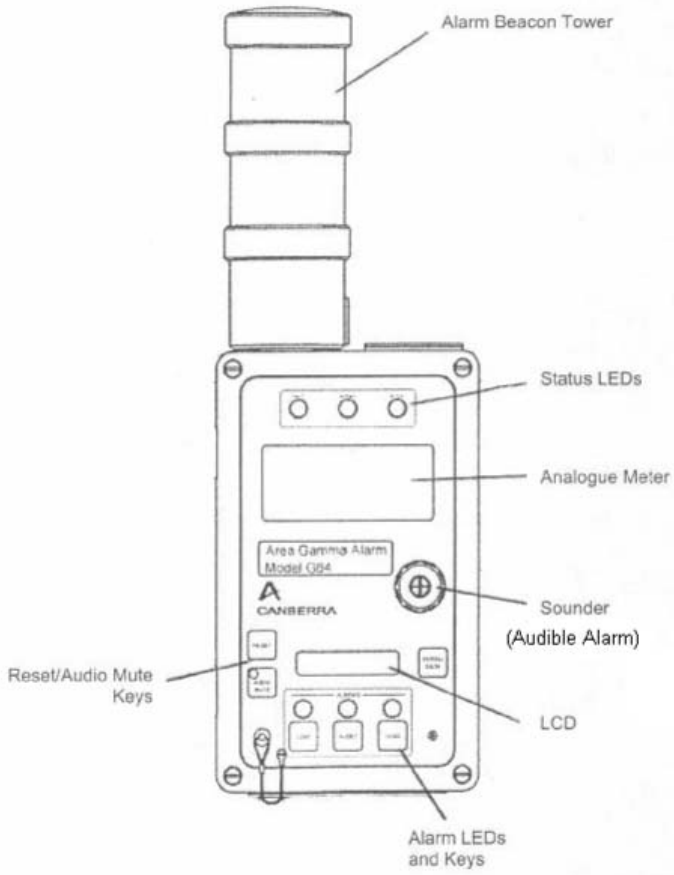

Standard G64: Display / User Interface

Figure RM III - 1

Figure RM III-1 – Stand Alone Gamma Detector Electronics/Display Unit

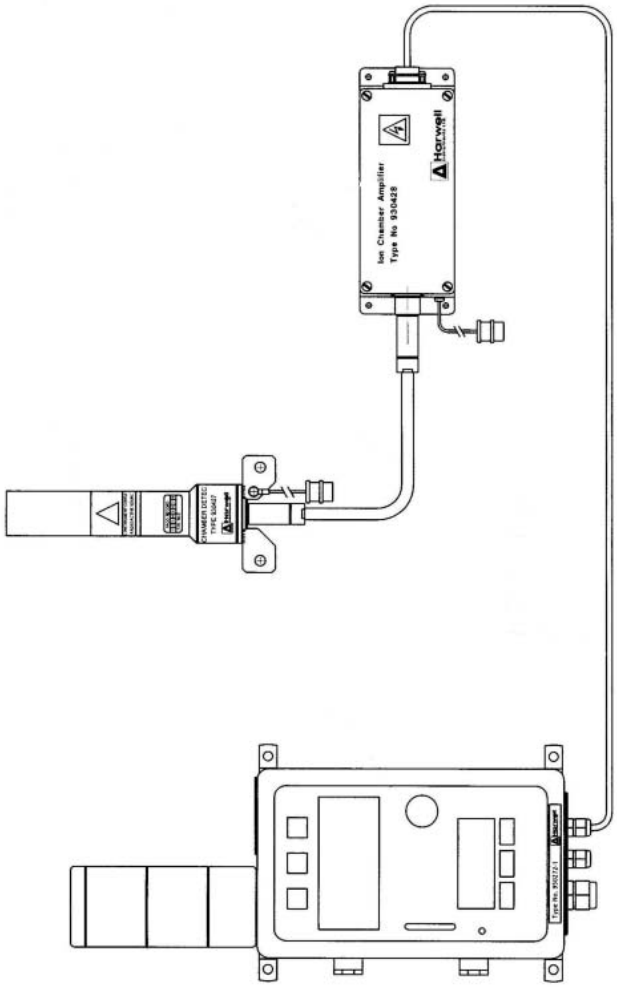

Figure RM III-2 – Stand Alone Gamma Detector with External Amplifier and Ion Chamber Detector

Chapter IV
Table of contents

Subsystem RM04, Portable Radiation Monitoring (PRM)

1.0 PRIMARY FUNCTIONS 1
2.0 DESIGN REQUIREMENTS 1
2.1 General Design Requirements 1
2.2 Subsystem General Requirements - Portable Radiation Monitoring (PRM 1
2.3 Structural Requirements 2
2.4 General Arrangement and Essential Features 2
3.0 DESIGN DESCRIPTION 2
3.1 Summary Portable Radiation Monitoring Equipment 2
3.2 Detailed System Description 2
3.3 Performance Characteristics 3
3.4 System Arrangement 3
3.5 Component Design Description 3
3.6 Instrumentation and Control 3
3.7 System Interfaces 3
4.0 OPERATION 3
5.0 SYSTEM LIMITATIONS, SETPOINTS, AND PRECAUTIONS 3
6.0 OFF-NORMAL EVENTS AND RECOVERY 3
7.0 MAINTENANCE 4

Subsystem RM04, Portable Radiation Monitoring

1.0 PRIMARY FUNCTIONS

The primary function of the PRM is to enable portable detection and measurement of levels of ionizing radiation fields, levels of radioactive surface contamination and the presence or absence of airborne particulate radioactivity releases.

2.0 DESIGN REQUIREMENTS

2.1 General Design Requirements

Refer to Section 2.1 of Chapter G for the general design requirements for the portable radiation monitoring.

2.2 Subsystem General Requirements - Portable Radiation Monitoring (PRM)

2.2.1 Portable radiation monitoring equipment shall be provided to perform radiation and contamination surveys in the field.

Portable instruments provided shall include alpha contamination detectors, beta contamination detectors, gamma survey meters, neutron survey meters, sample counters, and retrospective or real-time air monitoring instruments.

- Calibration of portable radiation detectors shall be performed with National Institute of Standards and Technology (NIST) traceable sources to ensure compliance with ANSI standards 317 and 323A.

2.2.2 Operational Requirements - Portable Radiation Monitoring

Portable radiation protection instrument normally are those battery-powered instruments that are carried to a specific location for use. These instruments are normally held during operation, also included are semi-portable radiation protection instruments.

If the fixed RMS equipment becomes inoperable and can not be put back in service within an hour, portable radiation detection equipment and/or Radiological Control personnel shall be used to perform the functions of the inoperable fixed RMS equipment.

In the event of an area radiation alarm, portable radiation detection equipment shall be used to survey the surrounding area to assess the nature and extent of the radiation field in compliance with 10 CFR 835, Parts 403 and 404.

Portal monitors designed to detect gamma radiation shall be located at the WIPP site entrance and are used to decrease the potential for sources accidentally brought onto or removed from the site. They shall also serve to

alert the Dosimetry department to persons receiving medical radioisotopes to comply with 10 CFR 835, Part 202(c), which states that background and medical doses shall not be included in occupational dose records.

Electronic integrating alarming dosimetry shall be worn by personnel who work in radiation areas greater than 100 mrem per hour.

2.3 Structural Requirements

Portable radiation monitoring shall not require storage in facilities designed to withstand a design basis earthquake.

2.4 General Arrangement and Essential Features

Portable gamma dose rate instruments shall be calibrated in the Calibration Room using a shielded calibrator and approved procedures. Portable neutron dose rate instruments shall be sent to a qualified vendor for calibration. Portable contamination instruments shall be calibrated in the area of the instrument Calibration Room with NIST-traceable sources and approved procedures.

Prior to use, these instruments shall be checked for response with a check-source containing a nominal amount of radioactivity. Those instruments that can not be calibrated at WIPP shall be sent to a calibration facility that has been approved by Quality Assurance.

Radiological Control sources shall be stored in a controlled access radioactive materials area.

3.0 DESIGN DESCRIPTION

3.1 Summary Portable Radiation Monitoring Equipment

The system includes all the equipment needed for detection, measurement, and alarm annunciation of radiation exposure that directly affect plant personnel and could potentially affect the public or environment.

3.2 Detailed System Description

To provide the necessary tools to make the complete system functional, Portable Radiation Monitoring Equipment is required. This equipment includes the portable radiological instruments used by the Radiological Control technicians to measure radiation and contamination and by radiation workers at personnel survey stations. It includes the portable instruments that are used by the Radiological Control technicians to measure flow, to collect samples, and to check the calibration of the portable radiation monitoring equipment. It includes radiation monitoring instruments that are

used by personnel to perform self-monitoring, such as Portal Monitors and Dosimeters.

3.3 Performance Characteristics

The portable radiation monitoring equipment supports the RMS as described in WP 12-5, WIPP Radiation Safety Manual, and are calibrated using NIST-traceable sources and according to prescribed calibration procedures.

3.4 System Arrangement

3.4.1 Portable instruments that are out-of-service are segregated from in-service instruments.

3.4.2 Portal Monitors are installed and functional at the entrance to the site. They are positioned such that personnel are automatically checked for radiological emissions when they enter and leave the site.

3.5 Component Design Description

This equipment is off-the-shelf commercially available equipment to meet the requirements of 10 CFR Part 835.

3.6 Instrumentation and Control

3.7 System Interfaces

Refer to Section 3.7 in Chapter G for the portable radiation monitoring interfaces.

4.0 OPERATION

4.1 Operation of portable radiation monitoring equipment is performed by Radiological Control in accordance with WP 12-HP series procedures and approved operating procedures.

5.0 SYSTEM LIMITATIONS, SETPOINTS, AND PRECAUTIONS

5.1 Portable radiation monitoring equipment shall undergo calibration prior to use following any preventive or corrective maintenance or any adjustment that voids the previous calibration.

6.0 OFF-NORMAL EVENTS AND RECOVERY

There are no defined off-normal events.

7.0 MAINTENANCE

Refer to Section 7.0 in Chapter G for Maintenance Requirements

Chapter V
Table of Contents

Subsystem EM01, Radiation Effluent Monitoring System (REMS)

Subsystem EM01, Radiation Effluent Monitoring System (REMS) is located in SDD EM00.

Chapter VI
Table of Contents

Subsystem PV00, Plant Vacuum System (PVS)

1.0 PRIMARY FUNCTIONS 1
2.0 DESIGN REQUIREMENTS 1
2.1 General Design Requirements 1
2.2 Subsystem General Requirements - PV00 1
2.3 Operational Requirements 2
2.4 Structural Requirements for the Radiation Monitoring System 2
2.5 General arrangement and Essential Features – PV00 3
2.6 Maintenance 4
2.7 In-Service Inspection 4
2.8 Instrumentation and Control Design Requirements 4
2.9 Interfacing Systems 4
2.10 Quality Assurance 4
2.11 Codes and Standards 4
2.12 Reliability Assurance 5
3.0 DESIGN DESCRIPTION 5
3.1 Summary PVS 5
3.2 Detail System Description 5
3.3 System Performance Characteristics 6
3.4 System Arrangement 7
3.5 Component Design Description 8
3.6 Instrumentation and Control Information 10
3.7 System Interfaces 12
4.0 OPERATION – RM00 12
5.0 SYSTEM LIMITATIONS, SETPOINTS, AND PRECAUTIONS, - RM0 12
5.1 Limitations 12
5.2 Setpoints 12
5.3 Precautions 12
6.0 OFF-NORMAL EVENTS AND RECOVERY 13
7.0 MAINTENANCE 13

List of Figures

Subsystem PV00, Plant Vacuum System

Figure Page

Figure RM VI-1 - Simplified PV00 Piping Instrument Diagram 14
Figure RM VI-2 - Plant Vacuum Pumps Control Panel..... 15

List of Tables

Table Page

Table RM VI-1 - PVS Instrument and Control 11

Subsystem PV00, Plant Vacuum System

1.0 PRIMARY FUNCTIONS

Refer to Section 1.0 of Chapter G for the primary radiation monitoring functional requirements which establish functional requirements for the PVS.

2.0 DESIGN REQUIREMENTS

2.1 General Design Requirements

Refer to Section 2.1 of Chapter G for the general radiation monitoring design requirements which establish the design basis for the PVS.

2.2 Subsystem General Requirements - PV00

The PVS shall provide the vacuum airflow required for designated CAM and FAS units in the WHB and in the Support Building.

2.2.1 The PVS shall provide separate vacuum air service to the RH waste handling areas and to the CH waste handling areas.

2.2.2 The PVS shall exhaust through HEPA filters to ensure that any radioactive particulates that escape the instrument filters are captured within the facilities.

2.2.3 The PVS shall provide vacuum piping from the central pumping station equipment to the immediate vicinity of each CAM and FAS unit requiring central vacuum service. The PVS shall be terminated with an isolation valve at each serviced CAM and FAS location.

2.2.4 The PVS shall have redundant vacuum pumps for each of the two subsystems to provide the operational reliability.

2.2.5 The vacuum pumps shall be designed and manufactured in accordance with "Hydraulic Institute Standard for Centrifugal, Rotary and Reciprocation Pumps, 1983."

2.2.6 The PVS shall be designed for a 25 year operating life. Components for which this cannot be achieved shall be readily replaced and clearly identified in the operation and maintenance manuals.

2.2.7 The air/vacuum piping system shall be designed and installed in accordance with ANSI B31.1 "Power Piping, 1983."

2.2.8 The input power requirements shall be 460 VAC ±0%, 60 Hz ±3% and three phase.

2.3 Operational Requirements

2.3.1 The nominal airflow supplied to each CAM and FAS unit attached to the PVS shall be 1 scfm. Individual unit supply may be increased to 2 scfm when required by the Radiation Safety Group for special monitoring purposes.

2.3.2 The PVS shall provide vacuum conditions of at lease 12 inches of mercury at each CAM and FAS location with the total airflow from all units up to 120% of nominal in normal operation.

2.3.3 The PVS system shall be designed for a total of 40 FAS and CAM units in RH and CH areas.

2.3.4 The PVS shall reach design Vacuum pressure conditions within 10 minutes of start-up with all assigned CAM and FAS units attached and previously set for nominal flow.

2.3.5 The nominal vacuum level at each subsystem header shall be at least 20 inches of mercury to ensure 12 inches of mercury at the service terminals.

2.3.6 Each subsystem shall be provided with its own control system. The control system shall provide the following features\:

A large push-to-actuate switch to stop each pump.

A three position switch for each pump that has the following functions:

- Pump motor off
- Pump motor on
- Pump motor under automatic control

A three position switch that selects which pump will operate in the lag mode.

On-off indication lights for each pump motor

Capability for automatic start of the lag pump if the manifold vacuum is smaller than 18 inches of mercury.

2.4 Structural Requirements for the Radiation Monitoring System

Refer to Section 2.4 of Chapter G for the general structural and materials requirements.

2.4.1 The pumps and associated motors shall be capable of operation over the system range without abnormal vibration. Vibration isolators may be used.

2.4.2 The pumps and motors shall be a manufacturers standard design for the service.

2.4.3 The pumps shall be of the heavy duty air cooled single stage type rated for service at 3,400 foot elevation.

2.5 General arrangement and Essential Features – PV00

Refer to Section 2.5 of Chapter G for general location requirements and related constraints.

2.5.1 Three pumps shall be provided. One pump operated in lead, one pump in lag, and one pump in standby.

2.5.2 Each pump shall be capable of supplying all its assigned vacuum loads with all loads operating at an average of 1.2 scfm and 12 inches of mercury vacuum.

2.5.3 Since the difference in the requirements for the CH subsystem and the RH subsystem is small, all three pumps shall be the same so that common parts stocking and maintenance training can be used.

2.5.4 Each pump shall be independently driven by a 440V, 60Hz, 3-phase electric induction motor.

2.5.5 Each pump with its associated motor shall be assembled on a separate base plate/skid suitable for moving with a forklift. The equipment, plumbing and wiring on each skid, shall be sufficiently complete that only five off-skid connections are required (excluding Instrumentation Connections):

- Inlet air
- Outlet air
- Motor power

2.5.6 All exposed moving parts shall have personnel guards to restrict incidental contact.

2.5.7 All wiring on the skid shall be in standard metallic conduit.

2.5.8 A full flow cross-link shall be provided between the two vacuum subsystems. A normally open manual isolation valve shall be provided in the cross-link. The isolation valve shall be located near the pumps in a readily visible location.

2.5.9 Check and stop valves shall be provided on the inlet and exhaust of each pump.

2.5.10 Each subsystem vacuum header shall have a direct reading vacuum gauge and a vacuum sensor for the automatic control function.

2.5.11 Signals shall be provided to the CMS of each pump on-off status.

2.5.12 Totalizing run time meters shall be provided for each pump.

2.5.13 A filter shall be provided for the inlet of each pump to protect the pump from damaging particles.

2.6 Maintenance

2.6.1 The vacuum pumps and associated inlet filters shall be located such that they can be inspected and serviced without disturbing the plumbing and electrical connections.

2.6.2 The vacuum inlet filters shall be located such that the filters can be changed without disturbing plumbing and electrical connections.

2.6.3 The isolation valves shall be located such that they are safely accessible from the operating floor.

2.6.4 The vacuum gauges on the manifolds shall be located such that they can be safely and easily read from the operating floor.

2.7 In-Service Inspection

2.7.1 Daily inspection of temperatures and pressures should be performed in order to identify pending problems so that correction can be scheduled. The manufacturers recommendations for preventive maintenance should be followed.

2.8 Instrumentation and Control Design Requirements

2.9–2.12 Cross-Reference

Refer to the respective sections of Chapter G for the general program requirements regarding the following SDD topics:

2.9 Interfacing Systems

2.10 Quality Assurance

2.11 Codes and Standards

2.12 Reliability Assurance

3.0 DESIGN DESCRIPTION

3.1 Summary PVS

Refer to Section 3.1 of Chapter G for the radiation monitoring summary descriptions which discuss the vacuum system design requirements.

3.2 Detail System Description

3.2.1 This system provides a centrally located vacuum source that is used to draw air through filters that collect potentially radioactive particulates. The system supplies the vacuum source for most of the area CAMs and the FASs located in the Waste Handling and Support Buildings. There is one vacuum system which has splits to service the RH waste area and the CH waste area. The RH vacuum system and the CH vacuum system together are the PVS (PV00). The system includes motors, valves, filters, pumps, gauges, and electrical controls. The Motor Control Centers and the wires from the Motor Control centers are part of ED05. Connections are made to the CMS so that the value of the vacuum and which vacuum pump is operating can be monitored remotely.

3.2.2 Operation of the PVS can be best understood by referring to Figure RM VI-1. Only enough of the valves and components are shown on this simplified diagram to enable understanding of the system operation. The complete system piping and instrument diagram is shown on engineering controlled drawing 41-F-030-W. All pumps are on a common header. This header has piping branching off to supply CH area and RH area pumps. A remote CAM or FAS system would be connected to a valve termination such as valve V025 to FAS 035. For example, typically plant vacuum is drawn through a FAS filter, valve V025 into the vacuum header via valve V023 leading to pumps 41-G-050B and 41-G-050C via valve V124 and inlet check valve V012, and the pump inlet filter. Typically this pump discharge is through outlet check valve V018 and valve V019 to a common header leading to discharge coalescing filter, valve V133, a second discharge coalescing filter, and the CH area exhaust duct system via V133 through the Battery Room Exhaust fan HEPA filters 41-B-834 and 41-B-979.

3.2.3 The termination valves such as V025, V026 and V027 are used to isolate the vacuum system from the equipment served. These valves are open when a CAM or FAS unit is connected and operational. These valves would be closed to perform maintenance on the CAM or FAS units, or if no unit is connected to the termination. These remote vacuum connections are fed from a piping loop configuration to reduce the line drop that would occur if they were fed by a single straight run of the same diameter pipe.

3.2.4 Valves V023, V024, V021 and V022 are branch isolation valves. These valves are used to isolate branches of the vacuum system. They are used for operations such as performing maintenance on branch piping without shutting down the complete system, or to isolate major portions of the system when investigating for leaks.

3.2.5 Valve V020 is the system cross-connect valve. This valve connects the CH vacuum system to the RH vacuum system. This valve provides flexibility in system operation by enabling the pumps of one system to support the needs of the other system.

3.2.6 Valves V124, V019, V017, V015, V010, V006, V003, and V008 are pump branch isolation valves. These valves permit isolating the vacuum pumps for maintenance purposes without shutting down the system.

3.2.7 Check valves V012, V018, V014, V016, V005, V009, V002, and V007 are used to prevent reverse flow through the pump loops.

3.2.8 The inlet filters to the vacuum pumps are Air filters to prevent powder, dust, or grit from entering the piping downstream of the filters.

3.2.9 The vacuum pumps are motor driven, vane type vacuum pumps.

3.2.10 The operation of the pumps is controlled by a control panel located near the pumps. The control panel controls motor starters that are located in two remote motor control centers. One motor control center supplies power to pumps A and C. The other motor control center supplies power to pump B. This method of connection maintains the ability to run a vacuum pump in the CH and RH loop even if power to a motor control center is lost.

3.3 System Performance Characteristics

A central PVS exists to provide the vacuum, as designated in Appendix G-1 and G-2, to draw sample air through most of the FAS units and some of the CAM units. Those CAM and FAS units that are not connected to the PVS are equipped with their own vacuum pumps. The operating characteristics of these pumps are described with the unit they support. The operating characteristics of the PVS is described below.

3.3.1 Normal Operations

The PVS runs in steady state with one vacuum pump supplying the vacuum needs for both the CH and RH branches. The other pumps is selected as the lag pump. The system operation is monitored once a shift to identify any potential problems.

The pump inlet filter element on each pump is changed as required to limit the pressure drop across the filter. This is accomplished by switching the pump off and isolating the pump with the inlet and outlet manual valves.

The pump exhaust is fed to the CH area exhaust duct upstream of the HEPA filters.

The over-capacity built into each pump results in the pump designated as the "lead" pump operating to supply the complete system. The lead pump runs continuously and does not cycle.

3.3.2 Off-Normal Operations

If the pumps (one lead and one lag) of the central PVS fail completely, the CMS will generate a low vacuum pressure alarm. This alarm is generated by the CMS from the vacuum signal that is transmitted from the CH and RH pressure transmitters.

If the system inflow of air increases sufficiently to cause the manifold vacuum pressure on either subsystem to decrease to 18 inches of mercury then one of the lag pumps will automatically turn on and bring up the vacuum pressure. If the motor control center feeding the active vacuum pump loses power, this will also bring on the lag pump fed by the alternate motor control center since the vacuum pressure will decrease rapidly after the loss of pump power. Because of the over-capacity built into the system, no normal system operation will cause the backup pump to turn on. Therefore, if the backup pump turns on, an investigation should be immediately begun by operations to identify and correct the problem.

3.4 System Arrangement

3.4.1 The PVS motors, pumps, and control system are located on the second floor of the WHB at the West end.

3.4.2 The PVS breakers and motor starters are located on the second floor of the WHB at the East end of the area that contains the room that houses the vacuum pumps. They are against the wall by the ramp that leads into the area. The A and C vacuum pumps are powered from the motor control center near the hot cell exhaust fan. The B vacuum pump is powered from the motor control center to the left of the A and C motor control center near the RH exhaust fan. Refer to the electrical SDD for additional information on these Motor Control Centers.

3.4.3 The vacuum pump units are mounted on a skid. To allow for misalignment when connecting up the pump piping with permanently installed piping, flexible pipe is provided on both the inlet and outlet lines of the vacuum pump.

3.4.4 A lifting device is provided to aid in maintenance of the pump units.

3.4.5 The control panel for starting, stopping, and selecting the mode of operation is mounted on a vertical frame in full view of the grouping of vacuum pumps.

3.4.6 Unit C is closest to the control panel, Unit B is the next closest, then A.

3.4.7 There is an inlet air filter mounted on each of the pumps. All pumps supply vacuum to CH and RH waste areas via common manifold.

3.5 Component Design Description

3.5.1 The control panel and the remote motor control centers contain all the electrical equipment to control the operation of the plant vacuum pump motors (see Figure RM VI-2). The control panel is 30 inches high, 24 inches wide, and 9 inches deep. The motor starters and breakers are part of two motor control centers located remotely.

3.5.2 There are three columns of controls on the control panel, one for each pump motor. The top switch of each column is a round push button "Emergency Stop" to remove power from the pump motor in case of a need to stop the pump rapidly, or if normal controls fail to stop the pump.

3.5.3 The second switch in each column on the control panel is a three position Mode selector switch. In the vertical position it will stop the pump. The other two positions are the "Lead" and "Lag" positions, and will select the pump to run in the "Lead" position, or set it up to be ready to run in the "Lag" position.

3.5.4 The third switch in each column of the control panel is the push button Start switch. This switch works in conjunction with the Mode selector switch to start the pump motor.

3.5.5 The fourth row of each column of the control panel contains red and green indicating lights. The Red light indicates that the pump is running. The green light indicates that the pump has been set up as the lag pump and is ready to run.

3.5.6 The fifth row of the control panel contains the Lag Selector switch. This switch will select which pump is to be controlled by the vacuum switches.

3.5.7 The motors that drive the vacuum pumps are directly coupled to the pump. The motors are 10 horsepower induction motors connected to three phase 460v, 60 Hz power. They draw 14 amperes when running at rated load at 1,150 rpm.

3.5.8 The pumps are type Rietschle 250 vacuum pumps. These pumps are single stage, multivane, air cooled pumps.

3.5.9 An integrated fan cools the pump by flowing air across the unit.

3.5.10 There are three types of valves in the PVS: a disk valve, a check valve, and a ball valve.

3.5.10.1 Valves with the round handles on them are disk valves. These valves are used as isolation valves and have a disk that is positioned against a seat to stop flow. These valves provide good isolation, but take many turns to operate from the fully open to the closed position. The valve position (open or closed) can be inferred from the length of the stem exposed above the valve body. If the stem is long, the valve is probably open. Disk valves are used in applications such a V008 and V010.

3.5.10.2 A ball valve operates by positioning a ball in a spherical seat. As the ball is rotated a passage through the ball is lined up with an opening on the inlet and outlet side of the spherical seat. The valve is moved from a fully closed to a fully open position with a 90 degree rotation of the ball. The ball is rotated by a lever type handle attached to the valve stem. The position of the valve can be determined by observing the handle of the valve. When the handle is lined up with the pipe the valve is open. When the handle is perpendicular to the pipe the valve is closed. Ball valves are used in applications such as V020, and V132.

3.5.10.3 A check valve is opened by the air flowing through it. A pivoted disk will seal against a seat inside the valve if there is no flow. (The valve must be installed with the proper side up and the flow arrow on the side of the valve body in the direction of airflow.) If flow in a direction opposite to the arrow is attempted the pivoted disk will be forced against the seat and stop the flow. These valves are used in applications such as V007 and V009.

3.5.11 There is one type of air filter used in the PVS.

3.5.11.1 An air filter is used on the input to the plant vacuum pumps. The filter is installed in the pump housing. The filter material will filter out powder, dust and grit from the inlet air stream.

3.5.12 There are gauges provided to monitor the operation of the plant vacuum pumps.

3.5.12.1 The discharge gauges on the piping and the pump housing are dial gauges that read from 0 to 15 psi (pounds per square inch).

3.5.12.2 The vacuum gauges that read the header and branch vacuum are dial gauges that read from 0 to 30 inches of mercury.

3.5.13 A lifting device is provided which is capable of lifting and moving the pump or motor.'

3.6 Instrumentation and Control Information

A complete listing of I&C information is shown on Table RM VI-1. A brief discussion of each of the items follows.

3.6.1 The two vacuum switches that control the lag pumps are mounted on the RH and the CH header. They are diaphragm type switches with a range of 30 inches of mercury. They can be set to trip over a differential range of approximately 8 inches of mercury, any where within the design range of 30 inches of mercury.

3.6.2 There are two vacuum gauges associated with each of the RH and CH headers. The four gauges are connected to their respective headers and are tube type gauges with a range of 0 to 30 inches of mercury vacuum.

3.6.3 There are three pump discharge pressure gauges. They are in the discharge piping. They all have dual scale ranges of 0 to 15 psi, and 0 to 100 KPa.

3.6.4 There are two pressure transmitters mounted on the rear wall in the Plant Vacuum Pump area. They are diaphragm type indicators that transmit an electrical signal to the CMS proportional to the vacuum. The transmitted signal varies from 4 to 20 mAs as the vacuum varies from 0 to 30 inches of mercury.

3.6.5 There are three contact signals from the pump controller circuitry to the CMS. These signals identify which pump is running.

Table RM VI-1 – PVS Instrument and Control

Item	Instrument Location	Type	Range	Accuracy**	Setpoint	Sensor Location	Readout Location
Vacuum Switches							
PS002	RH Header	Diaphragm	0-30" mercury	Commercial	18/20 In mercury	RH Header	None
PS001	CH Header	Diaphragm	0-30" mercury	Commercial	18/20 In mercury	RH Header	None
Vacuum Gauges							
PI009	RH Header	Tube	0-30" mercury	Commercial	N/A	RH Header	RH Header
PI010	RH Header	Tube	0-30" mercury	Commercial	N/A	RH Header	RH Header
PI015	CH Header	Tube	0-30" mercury	Commercial	N/A	CH Header	CH Header
PI016	CH Header	Tube	0-30" mercury	Commercial	N/A	CH Header	CH Header
Pressure Gauges							
PI018	Pump A Dis	Tube	0-15 psi, 0-100kPa	Commercial	N/A	Pump Dis	Pump Dis
PI019	Pump B Dis	Tube	0-15 psi, 0-100kPa	Commercial	N/A	Pump Dis	Pump Dis
PI020	Pump C Dis	Tube	0-15 Psi, 0-100kPa	Commercial	N/A	Pump Dis	Pump Dis
Pressure Trans							
PT005	Pump Room Wall	Tube	0-30" (4 to 20ma)	Commercial	16" Low, 30" High*	RH Header	CMS
PT011	Pump Room Wall	Tube	0-30" (4 to 20ma)	Commercial	16" Low, 30: High*	RH Header	CMS

* Software generated by the CMS

** Commercial Accuracy means "Standard available, off-the-shelf instruments with normal industry accuracies," usually better than ±20%.

3.7 System Interfaces

Refer to Section 3.7 of Chapter G for the PVS primary and secondary system interfaces.

4.0 OPERATION – RM00

Section 4.0 of Chapter G documents the prerequisite and bounding conditions for the operation of the PVS relative to its mission to support the radiation monitor subsystems.

5.0 SYSTEM LIMITATIONS, SETPOINTS, AND PRECAUTIONS, - RM00

5.1 Limitations

5.1.1 Each of the plant vacuum pumps will displace 250 cfm of free air at the design vacuum of 29.3 inches of mercury.

5.1.2 The vacuum pumps will overheat if run at atmospheric pressure for long periods of time. When starting a vacuum pump the isolation valve should be shut to allow the pump to reach 20 inches of mercury vacuum as soon as possible. The isolation valve should be opened gradually to bring the system down to design vacuum, while maintaining the pump vacuum to between 20 and 28 inches of mercury vacuum.

5.2 Setpoints

5.2.1 A vacuum switch exists on each of the headers for the RH and CH vacuum system. When the vacuum decreases to 18 inches of mercury on either of these headers, the pump selected as the lag pump will start automatically. When the header vacuum increases to 20 inches of mercury, the lag pump will shutdown.

5.2.2 The alarm point for low vacuum is 16 inches of mercury. This alarm point is set by software in the CMS. The CMS monitors the vacuum of each header and will initiated the alarm if the vacuum is less than the.

5.2.3 An auxiliary contact from the motor control center initiates a signal to the CMS to provide status of which vacuum pump is running.

5.3 Precautions

5.3.1 A nominal temperature of 185 degrees Fahrenheit is common with the exhaust of an operating vacuum pump. Care must be taken when performing even simple tasks such as changing a filter.

5.3.2 When operating valves from ladders the safety rules of the WIPP site must be complied with.

6.0 OFF-NORMAL EVENTS AND RECOVERY

Refer to Section 3.3 of this chapter for Normal and Off-Normal Operations.

7.0 MAINTENANCE

Refer to Section 7.0 of Chapter G for Maintenance Requirements.

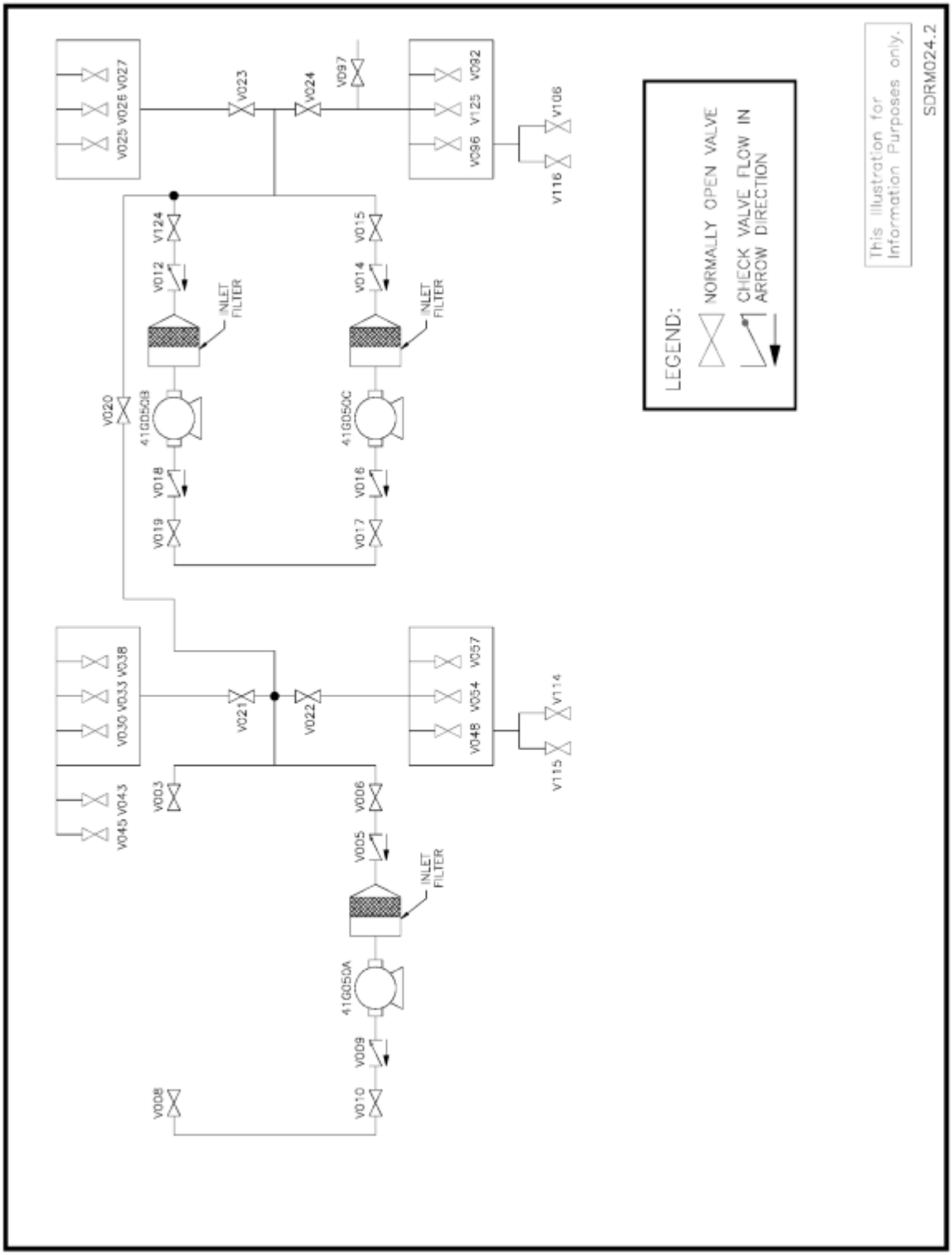

Figure RM VI-1 – Simplified PV00 Piping Instrument Diagram

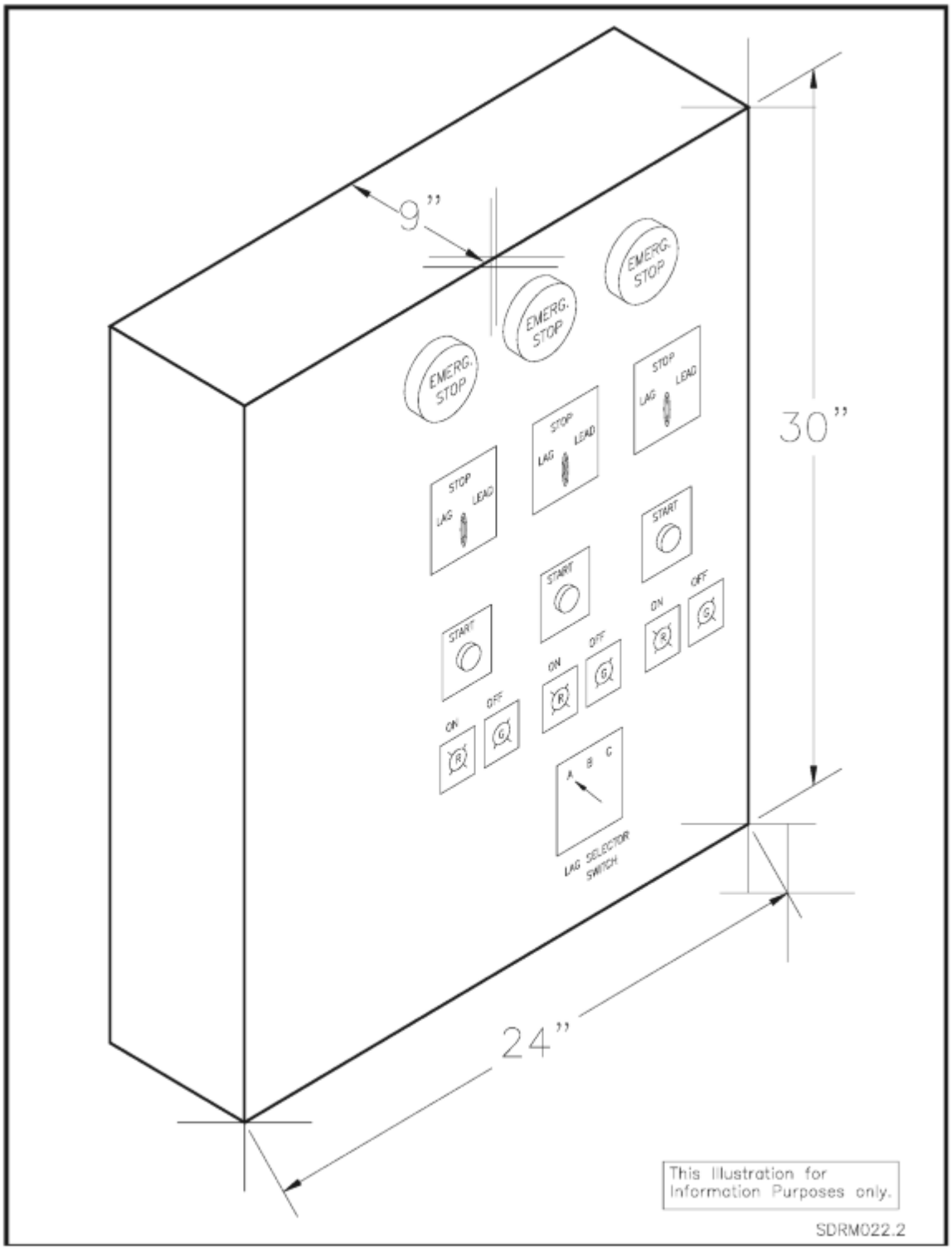

Figure RM VI-2 – Plant Vacuum Pumps Control Panel

Chapter VII
Table of Contents

Subsystem RM05, RH Continuous Air Monitors

1.0 PRIMARY FUNCTIONS 1
2.0 DESIGN REQUIREMENTS 1
2.1 General Design Requirements 1
2.2 Subsystem General Requirements 1
2.3 Operational Requirements 6
2.4 Structural Requirements for the Radiation Monitoring System 6
2.5 General Arrangement and Essential Features (RM05) 6
2.6 Maintenance 7
2.7 In-Service Inspection 7
2.8 Instrumentation and Control Design Requirements 7
2.9 Interfacing Systems 7
2.10 Quality Assurance 7
2.11 Codes and Standards 7
2.12 Reliability Assurance 7
3.0 DESIGN DESCRIPTION 7
3.1 Summary CAMs (RM01) 7
3.2 Detail System Description 7
3.3 System Performance Characteristics 11
3.4 System Arrangement 11
3.5 Component Design Description 12
3.6 Instrumentation and Control Information 14
3.7 System Interfaces 15
4.0 OPERATION 15
5.0 SYSTEM LIMITATIONS, SETPOINTS, AND PRECAUTIONS - RM01 15
5.1 System Limitations 15
5.2 Precautions 16
6.0 OFF-NORMAL EVENTS AND RECOVERY 16
7.0 MAINTENANCE – RM01 16

List of Figures

Subsystem RM05, RH Continuous Air Monitors

Figure Page

Figure RM VII-1 - RH CAM 17

List of Tables

Table Page

Table RM VII-1 - CAM Alarm Setpoints 15

Subsystem RM05, RH Continuous Air Monitors

1.0 PRIMARY FUNCTIONS

Refer to Section 1.0 of Chapter G for the primary radiation monitoring functional requirements.

2.0 DESIGN REQUIREMENTS

2.1 General Design Requirements

Refer to Section 2.1 of Chapter G for the general design requirements.

2.2 Subsystem General Requirements

2.2.1 RM05 – RH CAM System

Air sampling and analysis equipment shall be provided to enable a continuous determination of the airborne radioactivity status of selected locations within the RH Bay based on the accident analysis presented in the WIPP DSA, and to alarm for conditions of potential radiological hazard.

The CAMs shall be located to provide the desired personnel protection and alarm response considering credible accidents that could release airborne contamination. Portable CAMs may be used to provide coverage in accordance with 10 CFR Part 835.

CAMs shall be routinely calibrated and maintained, and shall be capable of providing an alarm at an activity level equivalent to eight DAC hours, under laboratory conditions.

Some RH CAMs are provided with an optional external gamma detector to provide alarms in areas where the gamma field may present a hazard to personnel.

The data obtained from the instrumentation comprising the RM05 system shall be transmitted to the CMS for recording and to allow the CMR operator to display current and historical radiological information and alarms on demand.

2.2.1.1 The RM05 system shall utilize stations that contain a filter, filter assembly, detector and airflow regulator. Tubing shall be provided to interconnect the CAM to the PVS. The CAM station shall conform to all applicable requirements specified in ANSI 42.17B.

2.2.1.2 The CAM shall be capable of collecting air particulate samples and detecting alpha and/or beta activities. The CAMs will send Hi alarm signals to the CMR in case there is ever a release in the RH process area monitored by the CAM.

2.2.1.3 The CAMs shall be suitable for continuous operation and shall have a 25-year design life. If this cannot be achieved for specific components (e.g., detectors), the design life shall be extended to 25 years by means of the recommended maintenance program.

2.2.1.4 Components such as seals, gaskets, and non-permanent lubrication shall have a minimum design life of 5 years and be easily field-replaced. All components that require periodic replacement shall be identified clearly and included in a preventative maintenance and spare parts inventory.

2.2.1.5 Protection devices shall be provided to prevent damage to the electronic circuitry and detectors and accessories.

2.2.1.6 Alpha/beta detectors used in the CAM system must meet the following criteria.

- The detectors should be capable of measuring one DAC when averaged over 8 hours (8 DAC-Hours), under laboratory conditions as given in 10 CFR Part 835.
- The sample detector shall be located such that it provides 2 pi geometry with respect to the sample.
- The radiation detectors may be scintillation crystal-photo multiplier tubes, Geiger-Mueller tubes, proportional counters, ionization chambers or other commonly acceptable detectors that meet requirements specified for each particular type of radiation.
- A calibration port shall be provided and the flow calibration procedures shall be such that they can be performed by a maintenance technician.

2.2.1.6.1 Beta Detector

- Each detector should be provided with a suitable means for calibration and operability checks.
- The filter holder and detector shall be located within a shielded compartment that provides the desired sensitivity in a background of 20 mrem/hr.

- The energy range for the beta detector shall be from 80 KeV to 2.5 MeV. The detector response efficiency shall be 20% for strontium-90.

- The detector shall be shielded to prevent gain changes due to orientation or to stray magnetic fields.

2.2.1.6.2 Alpha Detectors

- All samplers shall have an efficiency of ≥15% of 2 pi emission.

- The detector shall be sensitive to alpha particles from plutonium and cover the energy range of 1 MeV to 10 MeV.

2.2.1.6.3 Gamma Detectors

- The beta readings shall be corrected by readings from internal gamma detectors.

- Certain CAMs are fitted with external gamma detectors.

2.2.1.7 The electrical systems of the CAM shall meet the following requirements:

The power supply requirements for the CAMs shall be 120 VAC ±10%, 60 Hz ±3%, and single-phase any other voltage requirements shall be provided within the CAM.

Input power to the system shall be from an UPS system or from a battery backup power supply.

With the exception of internally generated high voltages, there shall be no potentials greater than a nominal 120 VAC connected to or existing within any instrument enclosures normally accessed by Radiation Control or Instrument personnel.

The power source connections shall be separated from signal connections and connected to terminal blocks with sufficient separation and/or barriers to prevent accidental cross-connection.

To provide for system modifications, expansion, and damage, each Input and Output signal cable and its associated connector shall be installed with ten percent spare conductors and connector terminals (pins), except for coaxial and high-voltage conductors.

The circuits wired to terminal blocks for external connection shall be grouped to allow for termination of all conductors of each incoming cable on adjacent terminals.

2.2.1.8 Sampler Filter Material shall meet the following requirements.

The filter shall be a membrane-type capable of withstanding a flow rate up to 3 cfm.

The filter pore size shall be selected to retain good particle collection efficiency, maintain a low pressure drop, and be compatible with the type of radiation being measured.

The pressure drop across the filter shall not exceed 3 inches of mercury at 1 cfm for a clean filter.

2.2.1.9 Filter Assembly shall meet the following requirements:

The filter assembly shall be quickly accessible for easy filter paper change.

The filter assembly shall be positioned so that the airflow to the filter is unimpeded, and the sampling inlet port of the filter is positioned to measure the area of concern.

The filter holder shall have a corrosion resistant porous backing screen or plate. For alpha detection a backing plate that provides support and maintains consistent spacing from the filter to the detector is preferred.

A suitable means must be provided to hold the filter against the backing support to insure that the filter does not shift while in operation and sample air does not bypass the filter.

The filter assembly shall not reduce the active collection area of the filter by more than 15% and shall not cause any localized buildup of material on the filter.

The detector and the filter size shall be matched to maximize the efficiency of the combination. Deviation from this requirement is permissible providing the reason for the deviation is documented and approved by Engineering and Radiation Safety.

2.2.1.10 Flow regulation for the CAM shall meet the following requirements.

Airflow regulation shall be accomplished by an airflow regulator system that has a minimum adjustable flow rate range of 1.0 to 2.0 cfm, ±10%.

Nominal air sampler operating airflow rate shall be dependant upon the requirements for effective sampling. This is normally 1.0 to 2.0 cfm.

The Flow regulator shall be capable of operating from a negative header pressure of at least 12 inches of mercury or an appropriate regulator installed between the vacuum line and the equipment.

The Flow regulator shall maintain a constant flow rate of ±10% through filter paper for pressure drops across the filter paper of up to 10 inches of mercury.

A flow meter shall be provided to measure the flow rate at the flow regulator.

Calibration procedures shall be controlled by the WIPP Operation Controlled Procedures Program to satisfy minimum calibration requirements.

Flow and pressure data will be furnished to the CMS using analog and/or digital signals from each selected facility station for alarming (such as low flow) and historical purposes. The analog and/or digital signal shall be of sufficient strength to prevent distortion by high electromagnetic fields.

2.2.1.11 Each CAM unit shall include the following functions:

Continuous monitoring and measurements of airborne particulates for alpha, beta radiation to meet the requirements of 10 CFR Part 835.

Provide local readout of measured alpha, beta and, in some cases, gamma radiation.

Local readout of the sample flow rates.

Transmittal of the measured radiation levels and flow rates to the CMS to be recorded and, optionally, displayed.

Two locally adjustable alarm setpoints, an Alert alarm level, and a High alarm level.

Have a fault alarm comprised of an alpha, beta, and/or gamma detector failure (zero counts from any detector or an alpha spectrum that is so distorted that the compensation calculations will not function correctly), high or low airflow, low filter differential pressure, configuration error and power failure detection.

Local visual and audible alarms for each of the alarm functions.

- The High Radiation alarm (alpha, beta, or gamma) shall be a red front panel light plus a flashing red beacon and a dual tone audible alarm.

- The Fault alarm activates a red front panel light plus a flashing green beacon.

Transmittal of the High and the Fault alarms to the CMS to alarm in the CMR.

The specific alarm shall be indicated on the local display.

The fault alarm and any other alarms that indicate operating status or protect the equipment shall be indicated by individual local lights and display messages.

The alarms shall not operate if the CAM is switched "off."

The reset of an alarm shall be possible locally where the reset shall cause the local audible alarm to cease and the flashing local visual alarm to continue flashing.

2.3 Operational Requirements

2.3.1 CAMs shall be provided in accordance with the requirements of 10 CFR Part 835, to ensure safe operation of the plant during normal operations, off-normal events and recovery from off-normal events.

2.3.2 A CAM shall be in operation to monitor the Transfer Cell for processing of 72B RH Waste Handling Mode.

2.3.3 A CAM shall be in operation to monitor the Cask Unloading Room for processing of 10-160B RH Waste Handling Mode.

2.3.4 The CAMs at the Cask Prep Station and in the Facility Cask Loading Room are not required for RH Waste Handling Mode. However, both CAMs should be in operation when waste is being processed in the respective area as a good practice.

2.4 Structural Requirements for the Radiation Monitoring System

Refer to Section 2.4 of Chapter G for the general structural and materials requirements.

2.5 General Arrangement and Essential Features (RM05)

Refer to Section 2.5 of Chapter G for general location requirements and related constraints.

2.6-2.12 Cross-Reference

Refer to Chapter G for the general program requirements regarding the following SDD topics.

2.6 Maintenance

2.7 In-Service Inspection

2.8 Instrumentation and Control Design Requirements

2.9 Interfacing Systems

2.10 Quality Assurance

2.11 Codes and Standards

2.12 Reliability Assurance

3.0 DESIGN DESCRIPTION

3.1 Summary CAMs (RM01)

Refer to Section 3.1 of Chapter G for radiation monitoring summary descriptions.

See Appendix A for studies that support CAM design.

3.2 Detail System Description

3.2.1 The CAMs are instruments that are used to monitor for airborne radioactive particles in the air being inhaled by personnel working in the area. Some CAMs have an optional external gamma detector for use in area radiation monitoring.

3.2.2 CAMs are provided in the RH area of the WHB. The CAMs utilize detectors and computer algorithms that analyze particulate matter deposited on filter paper and provide a continuous determination of the airborne radioactivity status of those locations. The information generated by the CAMs is available locally and transmitted to the CMS to indicate radiation levels, alarm conditions and equipment status. The location and other pertinent information for all CAMs is shown in Appendix F-1.

3.2.3 The RH CAMs use an alpha/beta/gamma compensation dual silicon diode detector that has the capability to monitor for both alpha and beta and provide gamma compensation for the beta. CAMs at the Cask Prep Station and

Facility Cask Loading Room also have an optional external gamma detector and act as an ARM for these locations.

3.2.4 The RH CAM enclosures are permanently installed. Sample tubing is used for the CAM which monitors the air in the Transfer Cell so that (1) the CAM may be located in the Service Room for easy access by the Radiation Control personnel for filter changes and by Maintenance personnel and (2) the air sample can be taken near the potential source of any airborne alpha/beta radiation using the shortest sample tube possible. All other RH CAMs sample the air directly at the air intake on the top of the filter holder assembly. The CAM on the Cask Prep Station is mounted on a movable arm to allow the operator to move it close to the potential source of any airborne alpha/beta radiation. The CAMs in this Facility Cask Loading Room and the Cask Unloading Room are permanently mounted close to the potential source of any airborne alpha/beta radiation.

3.2.5 All RH CAMs obtain their vacuum supply from the PVS. Refer to Appendix F-1.

3.2.6 All RH CAMs are connected to a central UPS and SPS to provide a reliable power source. Refer to Appendix F-1.

3.2.7 The RH CAMs will operate over airflow range of 15 to 60 liters per minute (approximately 0.53 to 2.12 cfm) with a recommended flow of 30 to 60 liters per minute (approximately 1.06 to 2.12 cfm). Since the RH CAMs have an internal flow meter to measure the flow used in the dose rate calculations, they do not require that the flow remain constant throughout the sample period. However, flow through the CAM filters is maintained constant by flow regulators mounted in the sample line downstream of the filter. These CAMs will be set to operate at a flow of 1.0 cfm (28.317 liters per minute).

3.2.8 The RH CAMs have the capability to send two analog and four digital signals to an external device such as the CMS. The values and alarms sent in this manner are selectable from a list contained within the CAM.

3.2.8.1 The CAMs on the Cask Prep Station and in the Facility Cask Loading Room which have the external gamma detector option will provide the following information to the CMS:

As analog signals (4-20 ma)
- Filer flow rate (linear value)
- Gamma Dose Rate (logarithmic value)

As digital signals (contact closure)
Alpha Alarm
Beta Alarm
Gamma alarm
Fault Alarm (see definition below)

3.2.9 The CAMs which monitor the Cask Loading Room and the Transfer Cell which do not have the external gamma detector option provide the following information to the CMS:

As analog signals (4-20 ma)
Filter flow rate (linear value)
Alpha DAC-hr information (linear value)

As digital signals (4-20 ma)
Alpha Hi Alarm
Alpha Hi-Hi Alarm
Beta Alarm
Fault Alarm (see definition below)

Note: The relays which provide the contacts for the digital outputs in all of the RH CAMs are normally energized.

3.2.10 An audible alarm, a two section light beacon (red and green), located on top of the CAM, and five indicator lights (two red, two green and one yellow) located on the front panel of the electronics cabinet will indicate CAM conditions.

3.2.10.1 Any radiation alarm, alpha, beta or gamma, will illuminate a red front panel lamp, cause the red beacon lamp to flash and sound a dual tone audible alarm.

3.2.10.2 A CAM fault, one or more of up to six configurable conditions, will illuminate a red front panel lamp and cause the green beacon lamp to flash and sound an intermittent tone audible alarm. (The flash function overrides the steady illumination of the green beacon resulting from turning the power on.

3.2.10.2.1 The fault conditions are:

Detector Fault - Indicated if no counts are received from any one or more of the detectors (alpha/beta detector, internal gamma detector, external gamma detector if installed) during the check interval. Detection fault is also indicated if the alpha signal spectrum is disturbed to the extent that the compensation calculations cannot work properly

High/Low Airflow - Indicated if the measured sample airflow is above the upper airflow limit, or below the lower airflow limit. The limit values are user-configurable.

Filter Pressure - Indicated if there is no differential pressure across the filter. This normally indicates that a filter card has not been inserted, the filter is broken, or the air supply has been interrupted.

Configuration Fault - Indicated if the archive data is corrupted, or if the clock data is invalid, or if the configurable parameter memory has not been initialized. These tests are performed at power-up, and corrective action is taken if faults are found to return the instrument to proper operation if possible. If the whole archive is corrupt it is cleared; if individual corrupt archive entries are found, they are removed but the remainder of the archive data is retained; if the real-time clock contains invalid data it is reinitialized to 00:01 01/01/2001; if the parameter memory is corrupted or not initialized, all configurable values are initialized to the default values.

AC Power Failure - Indicated if AC power has been disconnected from the CAM.

Battery/PSU - Indicated if the internal DC power supply voltage is below 10.7V or above 14.5V.

3.2.10.3 Turning the AC power on will illuminate a green front panel lamp and cause the green beacon lamp to illuminate.

3.2.10.4 Placing the CAM in monitoring mode will illuminate a green front panel lamp.

3.2.10.5 Placing the CAM in configuration mode will cause the red beacon to flash. The configuration mode for the RH CAMs is protected by a four digit password.

3.2.10.6 When pressed after an alarm has occurred, the **MUTE & BACKLIGHT** key turns off the audible alarm and fault indication. At any time the **MUTE & BACKLIGHT** key also switches the graphics display back-light to full brightness (pressing any other button also switches the graphics display back-light to full brightness). The display back-light will revert to low brightness after a delay of 5 minutes.

If the **MUTE & BACKLIGHT** button is pressed during normal operation when the audible alarm is OFF and the back-light is ON, it serves as a shortcut back to the main display screen.

3.3 System Performance Characteristics

3.3.1 RM05 – CAMs

3.3.1.1 CAM Requirements

3.3.1.1.1 When any of the required RH CAMs are determined to be inoperable and portable radiation monitoring equipment is not or cannot be used as a replacement, operations involving the handling of radioactive waste in the area monitored by the CAM shall be suspended.

3.3.1.2 Normal Operations

3.3.1.2.1 Alarms from the installed CAMs are received in the CMR and displayed locally. Any action required as a result of these alarms is initiated by the CMS operator and by the personnel in the area of the alarm.

3.3.1.2.2 In order to reduce maintenance and minimize false alarms, those CAM units which monitor the RH Bay in which no radioactive waste is being handled or transported should be placed "Out-of-Service" with Radiation Control management approval. A procedure shall be available that defines the functions and responsibilities of all affected sections relative to "Out-of-Service" equipment.

3.3.1.2.3 Typical readout of the corrected values for the RH CAMs is very near 0 DAC-hr for alpha and beta and background for gamma (where installed).

3.3.1.2.4 The RH CAM filters are normally changed on an as-needed basis based on the run time for any particular CAM.

3.3.1.3 Off-Normal Operations

3.3.1.3.1 If a required CAM and remote alarm capability is determined to be inoperable, operations involving the handling of radioactive waste in the area monitored by the CAM are terminated until the problem is fixed or an acceptable alternative monitoring method is in place.

3.3.1.4 There are no infrequent operations identified for this system.

3.4 System Arrangement

3.4.1 CAM System Arrangement

3.4.1.1 The location of the CAM intakes is based on placing the sampler as close as possible to the source. Refer to Appendix F-1 for information concerning location, status, vacuum source, power supplies and special notes for the CAMs.

3.4.1.2 The RH CAMs are configured in two different arrangements. The location of each instrument, power supply information, and other interface information is shown in Appendix F. The RH CAMs configuration is shown schematically on Figures RM VII-1 and VII-2. The CAM numbers shown on these figures indicate which CAMs utilize that particular configuration.

3.4.1.2.1 Airflow for the sample lines for the RH CAMs is provided by the PVS. A vacuum relief valve is not required. Although flow control is not critical for the algorithms in these CAMs a flow control system in provided to control flow.

3.5 Component Design Description

3.5.1 Component Design Description for RH Support CAMs

3.5.1.1 The RH CAMs use a dual ion implant silicon diode detector for alpha/beta detection with its signal fed into a 256-multichannel pulse height analyzer. This radiation detector is mounted just above the sample filter.

3.5.1.1.1 This detector is used to measure the radiation from the sample captured on the filter paper. This detector is also sensitive to background gamma radiation. The software subtracts the background radiation level from the sample measured by the sample detector to produce an accurate reading of the beta radiation levels of the particles collected on the filter paper.

3.5.1.1.2 The sample detector and filter is shielded to reduce the background interference with the reading of the deposits on the filter media, thereby improving the lower limit sensitivity.

3.5.1.2 The filter papers used in the CAMs are designed to collect particles 3 microns or larger. The CAM filters are 25 mm diameter fiberglass filters.

3.5.1.3 Ideally, the size of the filter holder, the filter paper, and the detector head should be matched. Under these conditions, the efficiency of the system is maximized. To compensate and determine the difference, calibration sources are matched with the diameter of the filter opening so that an accurate determination of the overall detector versus sampler efficiency can be determined.

3.5.1.4 The optional external gamma detectors on the CAMs have a range of 0.1 microSv/hr - 100 mSv/hr (10 microRem/hr - 10 Rem/hr). These units are primarily used for personnel protection during waste handling. The alarm setpoints are listed in Table VII-1.

3.5.1.5 Each RH CAM is housed in an enclosure which is designed to be wall mounted.

3.5.1.6 The RH CAMs are all the same model with the same basic capabilities except that an external gamma detector option is used at some locations.

3.5.1.6.1 The RH CAMs are configured to be networked to the Intranet. Vendor supplied units are attached to each CAM which read the spectrum and data from the CAMs and transmit it over the Intranet in UDP packets to PCs running software that can interpret, display, and archive the data. Each RH CAM also sends status information to the CMS as hard wired analog and digital signals for archiving and display in the CMR.

3.5.1.6.2 The front panel of each CAM has a LCD screen, a mute/backlight key, a reset key and four softkeys whose functions change depending on the contents of the bottom line of the display on the screen.

3.5.1.6.3 The **RESET** key is used to return to the Main Display on the LCD panel from other displays, clear alarms and restart the calculations, and terminate the filter change state initiated by pressing the filter release bar.

3.5.1.6.4 When pressed after an alarm has occurred, the **MUTE & BACKLIGHT** key turns off audible alarm and fault indication. At any time the **MUTE & BACKLIGHT** key also switches the graphics display back-light to full brightness (pressing any other button also switches the graphics display back-light to full brightness). The display back-light will revert to low brightness after a delay of 5 minutes. If the **MUTE & BACKLIGHT** button is pressed during normal operation when the audible alarm is OFF and the back-light is ON, it serves as a shortcut back to the main display screen.

3.5.1.6.5 The RH CAM operator and maintenance interfaces are via a hierarchy of displays which are controlled via soft keys whose functions are defined by labels at the bottom of each screen display. The displays and a description and use of the interface can be found in the **iCAM User's Guide**.

3.5.1.6.6 **CONFIGURATION SETUP** - The operation of the iCAM (RH CAM) can be configured by the user through an extensive selection of adjustable parameters, which are stored in non-volatile memory in the instrument. Any of the configurable parameters may be read and most may be changed using the iCAM Configuration Software (see Section 6 of the iCAM User Guide). In addition, the more commonly used parameters may be viewed and changed directly via the iCAM display and softkeys.

Configuration Screen - The configuration screen requires a password in order to gain access to the instrument set-up functions, and then offers ten sub-menu options:

- Alarm Levels
- Alarm Relay Assignments

- Fault Alarm Configuration
- Measurements and Compensation
- Activity Units
- Activity Concentration Units
- (External) Gamma Measurement Units
- Airflow Measurement Units
- 4-20 mA Outputs Configuration
- Miscellaneous Options

The configuration setup is fully described, including the values needed for the configuration, in approved procedures.

3.5.1.6.7 When the filter release lever is depressed the following will occur.

[A] Normal operation is halted.

[B] The red beacon flashes to indicate that the instrument is not in normal operating mode.

[C] Alarms are disabled (but the alarm relays retain their last valid state).

[D] A display appears on the LCD screen containing the following information:

- A statement that the filter lever was depressed
- The message "Replace Filter and Press Reset to Resume Normal Operation"
- The time and date of the last filter change
- The total airflow since the last filter change

There are no entries in the menu line for this screen. Pressing reset will return the unit to operating mode and the LCD screen will return to the Main Display.

3.5.1.6.8 The Flow Controller contains the electronics to interpret the flow signal and position a flow control valve to control the flow through the filters to the flow setpoint value.

3.6 Instrumentation and Control Information

3.6.1 RH CAMs

See Table RM VII-1 in Section 5.1.2 for system operational setpoints.

3.7 System Interfaces

Refer to Section 3.7 of Chapter G for the RH CAMs primary and secondary system interfaces.

The interface points between RM05 RH CAMs and their respective connections to support and monitoring subsystem (i.e., PV00, ED00, and CM01) are presented on the controlled radiation monitor drawings (refer to Appendix D).

4.0 OPERATION

Refer to Section 4.0 of Chapter F for RMS operating procedures.

5.0 SYSTEM LIMITATIONS, SETPOINTS, AND PRECAUTIONS - RM01

5.1 System Limitations

5.1.1 The RH CAMs have no operating limits, because they are a passive monitoring system. The beta readouts typically indicate 0.0 DAC, depending on many variables, including the time of day, and the activity in the area. The alpha readout generally indicates 0.0 DAC. The flow control systems control the sample flow to between 1.17 and 1.43 cfm. The differential pressure across the filter is typically less than 6 psi.

5.1.2 The RH CAMs have a normal operating limit of 41 to 122 degrees Fahrenheit (5 to 50 degrees Celsius) and Relative Humidity of 0 to 95% noncondensing.

5.1.3 Setpoints

Table RM VII-1 – CAM Alarm Setpoints*

	**Operating HI Alarm Setpoint	**Operating HI-HI Alarm Setpoint	*** Maximum Setpoint
CAM			
Cask Prep Station & CUR	N/A	0.267 DAC	0.267 DAC
	N/A	8 DAC-hour	8 DAC-hour
Transfer Cell & FCLR	8 DAC-hour	40 DAC-hour	40 DAC-hour
ARM			
Cask Prep Station & CUR	20 mR/hr	N/A	20 mR/hr
FCLR	5 mR/hr	100 mR/hr	100 mR/hr

* Since the CAMs at the Cask Prep Station and the Facility Cask Loading Room also function as ARMs (i.e., they have external gamma detectors), the alarm setpoints for both the CAMs and ARMs are shown.

** These are the normal operating setpoints allowed without written approval from Radiation Safety Management.

*** These are the setpoints established to meet the requirements of 10 CFR Part 835. Setpoints above those listed must be preceded by written approval from Radiation Safety Management.

5.1.4 The DAC for strontium-90 is selected because it is more limiting than the DAC for cesium-137. The setpoint is dependent on the sample flow rate, and a matched detector and filter holder.

5.1.5 The detector efficiency for the alpha units is 15%. The detector efficiency for the beta units 20%.

5.2 Precautions

5.2.1 Whenever there is radioactive waste handling activity in an area monitored by a fixed CAM, a portable CAM with the appropriate capabilities must be in the operating area.

5.2.2 When operating or maintaining the RH CAM system, personnel should be aware of the following precautions.

5.2.3 The filter papers removed from the sample holders are potentially contaminated and should be treated as contaminated until proven otherwise.

5.2.4 The detectors have high voltages associated with them. The unit should be de-energized before disassembling the detector housings. Power shall be removed from all equipment prior to performing repairs.

5.2.5 Two-way radios shall not be transmitting within 25 feet of any CAM.

6.0 OFF-NORMAL EVENTS AND RECOVERY

On loss of power, RM05 equipment power is supplied from the main UPS.

7.0 MAINTENANCE – RM01

Refer to Section 7.0 in Chapter G for Maintenance Requirements.

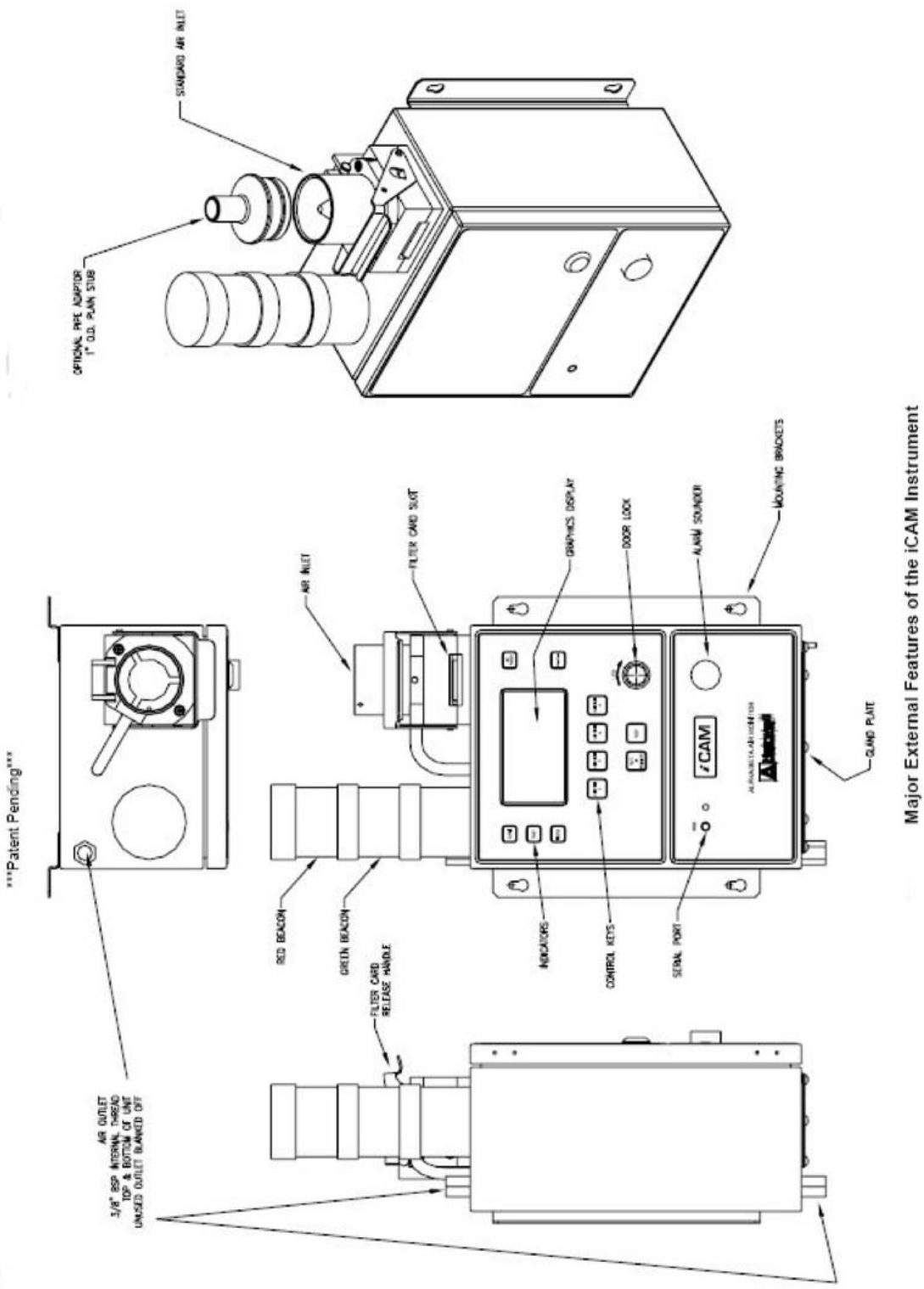

Figure RM VII-1 – RH CAM

Chapter VIII
Table of Contents

Appendices

APPENDIX A – REFERENCES 1
APPENDIX B – ABBREVIATIONS AND ACRONYMS 4
APPENDIX C – EQUIPMENT LIST 6
APPENDIX D – ENGINEERING DRAWINGS 7
APPENDIX E – PRIMARY AND SECONDARY INTERFACE LIST 8
APPENDIX F-1 – CAM INFORMATION 9
APPENDIX F-2 - FAS INFORMATION 10
APPENDIX F-3 – ARM INFORMATION 12
APPENDIX G – GAUGE/INSTRUMENT REQUIREMENTS 13

NOTICE

The appendices that follow are for information only and thereby are not part of the Controlled Document. Some of the information provided is controlled in various component indices and no attempt to duplicate these is intended here.

APPENDIX A – REFERENCES

[A] User Manuals and OEM Manuals

1. Rietschle Vacuum Pump Installation and Operating Manual

2. Manuals for the HP equipment are identified by the Vendor of the equipment and the model number of the equipment.

[B] Key Radiation Monitoring Design Studies

1. "Aerosol Measurements in the Partially Completed Underground Waste Isolation Pilot Plant: Final Report; George Newton; DOE Contract DE-AC04-76V01013, 1983.

2. "Particle Penetration Through CAM Sampler Aerosol Transport Lines," Texas A&M University, April 1988.

3. "Tests of Model Waste Isolation Pilot Plant (WIPP) Exhaust Air Flow Systems," DOE/WIPP 88-024, Texas A&M University, September 1988.

4. "Airborne Radiation Monitoring Equipment Siting Studies in the CH Bay Area and Underground at the Waste Isolation Pilot Plant," Kenneth Steinbruegge, Westinghouse Electric Corporation, Waste Isolation Pilot Plant, Carlsbad, NM, November 10, 1989.

5. "Evaluation of the Eberline Alpha-6 Continuous Air Monitor for Use in the Waste Isolation Pilot Plant: Report for Phase II," Mark D. Hoover, et al., Lovelace Inhalation Toxicology Research Institute, Albuquerque, NM, January 31, 1990.

6. "A CAM Sampler for Collecting and Assessing Alpha-Emitting Aerosol Particles," McFarland, Bethel, Ortiz, Stanke, Texas A&M University, January, 1990.

7. "Optimization of Aerosol Penetration Through Transport Lines," McFarland, et al., Texas A&M University.

8. "Evaluation of the Eberline Alpha-6 Continuous Air Monitor for Use in the Waste Isolation Pilot Plant, Phase I Report," Hoover, Newton, Yeh, Seller, Boecker; Lovelace Inhalation Toxicology Research Institute; December 1988.

APPENDIX A – REFERENCES

9. "Evaluation of the Eberline Alpha-6 Continuous Air Monitor for Use in the Waste Isolation Pilot Plant, Report for Phase II," Hoover, Newton, Yeh, Seller, Boecker; Lovelace Inhalation Toxicology Research Institute; January 1990.

10. "Laboratory Tests on the In-line Sampling Head for the Eberline Alpha-6 Continuous Air Monitor," Mark Hoover and George Newton; Inhalation Toxicology Research Institute; ITRI-TR-91601; June 1991.

11. "Response of the Eberline Alpha-6 to Low Level Releases of Plutonium," Mark Hoover and George Newton; Inhalation Toxicology Research Institute; ITRI-TR-91602; June 1991.

12. "Analysis of Alpha CAM Performance at the WIPP," DOE/WIPP 94-001C.

13. "An Evaluation of the Alpha CAMs at the WIPP against Current Performance Testing Standards," DOE/WIPP-94-2049.

14. "Performance Testing of Eberline Alpha-6 and 6A Continuous Air Monitors," Pacific Northwest National Laboratory; September 1996. Transmitted from WID to DOE September 23, 1996 via letter WD96:03619.

15. "Test Report for Seismic Testing of One Eberline Remote In-line Detector Head in NEMA Closure for Westinghouse Electric Corporation Waste Isolation Division," WYLE Laboratories; Report 54862; Contract DE-AC04-86AL31950; PO 75-WJM65719SX; October 1994.

16. "Evaluation of the Aerosol Collection Efficiency at 4 m/sec and 12 m/sec Wind Speed for 5 Micron and 10 Micron Aerodynamic Diameter Particles in the Radial Inlet Sampling Head of the Eberline Alpha-6 Continuous Air Monitor," Mark D. Hoover; Lovelace Respiratory Research Institute; June 2000.

17. "Preliminary Analysis of the Influence of Filter Washing on the Detection of Plutonium on Millipore Fluoropore Filters from the Waste Isolation Pilot Plant," Mark D. Hoover; Lovelace Respiratory Research Institute; July 2000.

[C] Individual Equipment Specifications

The WIPP Specification Register lists all the equipment specifications for the RM00 system.

APPENDIX A – REFERENCES

[D] System Design Development Testing

1. RM02-DT-01, Fixed Air Sampler Flow Regulation and Accuracy Verification Test

2. EM/RM01-DT-01, Gold Alpha Detector Testing

[E] System Testing

1. EDT No. E93-249, ARPS Sampler Background Shielding and Subtration Verification Test.

APPENDIX B – ABBREVIATIONS AND ACRONYMS

ITEM	DEFINITION
ALARA	As Low as Reasonably Achievable
ANSI	American National Standards Institute
ARM	Area Radiation Monitor
ARMS	Area Radiation Monitor System
CAM	continuous air monitor
cfm	cubic feet per minute
CFR	*Code of Federal Regulations*
CH	contact-handled (waste)
CMR	Central Monitoring Room
CMS	Central Monitoring System
DAC	Derived Air Concentration - Quantity obtained by dividing the allowable limit of a single radionuclide a person may ingest over a years period, by the volume of air breathed by an average worker during a working year.
DOE	U.S. Department of Energy
DSA	Documented Safety Analysis
EMS	(Exhaust Air) Effluent Monitoring System
FAS	fixed air sampler
FCP	Flow Control Panel
FIC	flow indicating controller
GPDD	General Plant Design Description
HEPA	high efficiency particulate air (filter)
Hz	Hertz
KeV	kilo-electron volts
LCD	liquid crystal display
LCO	Limiting Condition for Operation
LDU	local display unit
ma	milliampere (one thousandth of an ampere)
MeV	million electron volts
MEI	maximally exposed individual
mm	millimeter
MREM	millirem (Milli Roentgen Equivalent in Man)
mR/hr	milliroentgen per hour

APPENDIX B – ABBREVIATIONS AND ACRONYMS

ITEM	DEFINITION
NEMA	National Electrical Manufacturers Association
NESHAP	National Emission Standards for Hazardous Air Pollutants
NIST	National Institute of Standards and Technology
ppm	parts per million
PRM	Portable Radiation Monitoring
psi	pounds per square inch
PSV	pressure safety valve
PVS	Plant Vacuum System
REMS	Radiation Effluent Monitoring System
RH	remote-handled (waste)
RIC	Radiation Indication Controller
RIT	radiation indicating transmitter
RMS	Radiation Monitoring System
scfm	standard cubic feet per minute
SDD	System Design Description
SPS	standby power supply (backup power unit)
TLD	thermoluminescent dosimeter
UDP	User Datagram Protocol
UPS	uninterruptible power supply
VAC	volts, alternating current
WHB	Waste Handling Building
WIPP	Waste Isolation Pilot Plant

APPENDIX C – EQUIPMENT LIST

Refer to the Equipment Register maintained in the Engineering File Room.

APPENDIX D – ENGINEERING DRAWINGS

A. 41-R-007-W	Radiation Monitoring System Instrumentation, Control, Location and Interface Drawing.
B. Drawing Register	Lists all drawings by system designator and indicates the current status.

APPENDIX E – PRIMARY AND SECONDARY INTERFACE LIST

Information is listed in Sections 2.9 and 3.7 of Chapter G.

APPENDIX F-1 – CAM INFORMATION

CAM#	Status	Monitors	Location	Source	Supply	Remarks	Networked
060	Active	Alpha/Beta/ Gamma	RH Bay Prep Station	Plant Vac	PV00	UPS	SCInet
061	Active	Alpha/Beta	Service Room	Plant Vac	PV00	UPS	SCInet
062	Active	Alpha/Beta/ Gamma	Facility Cask Loading Room	Plant Vac	PV00	UPS	SCInet
063	Active	Alpha/Beta	West Filter Gallery	Plant Vac	PV00	UPS	SCInet
066	Active	Alpha/Beta	Cask Unloading Room	Plant Vac	PV00	UPS	SCInet

CAM #	Status	Monitors	Location	Air source	Power Supply	Remarks
119	Inactive	Alpha	U/G	Vac Pump	Inverter	U/G active room
129	Inactive	Alpha	U/G	Vac Pump	Inverter	U/G
130	Inactive	Beta	U/G	Vac Pump	Inverter	U/G
145A	Inactive #	Alpha	U/G	Vac Pump	Inverter	U/G active room
145B	Inactive	Beta	U/G	Vac Pump	Inverter	U/G active room
146A	Inactive #	Alpha	U/G	Vac Pump	Inverter	U/G active room
149	Active	Alpha/Beta	U/G	Vac Pump	Inverter	U/G active panel
150	Active	Alpha/Beta	U/G	Vac Pump	Inverter	U/G active panel
151	Inactive	Alpha/Beta	U/G	Vac Pump	Inverter	U/G active panel
152	Inactive	Alpha/Beta	U/G	Vac Pump	Inverter	U/G active panel
153	Removed	Alpha		Vac Pump	Inverter	Formerly at Sta. A1
154	Removed	Beta		Vac Pump	Inverter	Formerly at Sta. A1
155	Inactive	Alpha	Station C	Vac Pump	Inverter	
156	Inactive	Beta	Station C	Vac Pump	Inverter	
157	Removed	Alpha		Vac Pump	Inverter	Formerly at Sta. A2
158	Removed	Beta		Vac Pump	Inverter	Formerly at Sta. A2

These units have remote communications capability via the remote RS-232 Connector J302 on the Alpha-6.

APPENDIX F-2 – FAS INFORMATION

FAS No.	FAS Skid or Instrument No	Location	FAS Type
FAS 001	411-S-212	WHB 1st Level Down-RH	*
FAS 002	411-S-213	WHB 2nd Level Down-RH	*
FAS 003	411-S-214	WHB FL1 RH Fltr Gallery	*
FAS 004	411-S-215	WHB FL1 RH FLTR Gallery	*
FAS 005	411-S-216	WHB FL1 Facility Cask Loading Room	*
FAS 006	411-S-217	WHB FL1 RH Receiving	*
FAS 007	411-S-218	WHB FL2 RH OPERTG Gallery	*
FAS 008	411-S-219	WHB FL3 RH HOT Cell Platform	*
FAS 009	411-S-220	WHB F1 RH Filter Gallery	*
FAS 010	411-S-221	WHB FL3 RH HOT Cell Platform	*
FAS 011	411-S-222	WHB F1 RH Filter Gallery	*
FAS 012	411-S-223	WHB FL2 RH OPRTNG GLRY	*
FAS 013	411-S-224	WHB F1 RH Filter Gallery	*
FAS 014	411-S-225	WHB FL3 RH HOT CELL PLTFM	*
FAS 015	411-S-226	WHB FL3 RH HOT CELL PLTFM	*
FAS 016	411-S-227	WHB FL3 RH CRN Maint. Access Corr	*
FAS 017	411-S-228	WHB FL4 RH DEFL SHV RM	*
FAS 018	411-S-229	WHB FL5 RH WSTE HOIST RM	*
FAS 019	411-S-230	WHB FL1 CH W. AREA RM	*
FAS 020	411-S-231	WHB FL1 CH W. AIRLOCK	*
FAS 021	411-S-232	WHB FL1 CH W, Dock	*
FAS 022	411-S-233	WHB FL1 CH MDL AIRLOCK	*
FAS 023	411-S-234	WHB FL1 CH E. Dock	*
FAS 024	411-S-235	WHB FL1 CH E. AIRLOCK	*
FAS 025	411-S-236	WHB FL1 CH CONVEY CAR LDG	*
FAS 026	411-S-237	WHB FL1 RH/CH SHAFT ENTRY	*
FAS 027	411-S-238	WHB FL1 CH EQ XFR AIRLOCK	*
FAS 028	411-S-239	WHB FL1 AIRLOCK FR SUP BLDG	*
FAS 029	411-S-240	WHB FL1 CH SITE GEN WST RM	*
FAS 030	411-S-241	WHB FL1 CH CHANGE RM	*
FAS 031	411-S-242	WHB FL1 CH CHNG RM AIRLOCK	*
FAS 032	411-S-243	WHB FL1 CH WH Tool Room	*
FAS 033	411-S-244	WHB FL1 CH OVRPK REPAIR RM	*
FAS 034	411-S-245	WHB FL1 CH AREA AIRLOCK	*
FAS 035	411-S-246	WHB FL2 CH MECH EQ RM	*
FAS 036	411-S-247	WHB FL2 CH MECH EQ VNT RM	*
FAS 037	411-S-248	WHB FL2 CH MECH EQ RM	*
FAS 038	411-S-249	WHB FL2 CH MECH EQ RM	*
FAS 039	411-S-250	WHB FL2 at Elevator	*
FAS 042	451-S-253	SUP BLDG SAMPLE PREP LAB	*
FAS 044	451-S-255	SUP BLDG MAIN CORRIDOR	*
FAS 045	451-S-256	SUP BLDG SHLD CAL RM	*
FAS 049	411-S-143	WHB FL1 CH OVERPK RM	***
FAS 050	411-S-144	BLDG 412 TMF	***
FAS 108	534-S-137	U/G N170/S90	***
FAS 109	534-S-119	U/G	***
FAS 110	534-S-120	U/G E140/BETWEEN S90 & S400	***
FAS 111	534-S-121	U/G E225/S400	***
FAS 114	534-S-124	U/G W170/S700	***

APPENDIX F-2 – FAS INFORMATION

FAS No.	FAS Skid or Instrument No	Location	FAS Type
FAS 115	534-S-125	U/G E300/S1000	***
FAS 116	534-S-126	U/G E300/S1300	***
FAS 117	534-S-142	U/G E140/S1300	***
FAS 118	534-S-127	U/G W30/S1300	***
FAS 119	534-S-128	U/G E300/S1600	***
FAS 121	534-S-130	U/G S2520	***
FAS 122	534-S-106	EXHAUST SIDE OF DRIFT	****
FAS 146B	534-S-146	EXHAUST SIDE OF DRIFT	****
FAS 151	534-S-140	EXHAUST FILTER BUILDING	***
FAS 153	413-S-136	EXHAUST FILTER BUILDING	***
FAS 255	411-FAS-007-255	HOT CELL EXTERIOR WEST WALL	***
FAS 256	411-S-256	WHB FL1	*

Note: RH Support Systems are FAS 001 to FAS 015 and are inactive

* FAS Unit connected to the Plant Vacuum System
** FAS Unit with Vacuum Pump
*** FAS Unit with Vacuum Pump and Backup Power
**** FAS Unit with Vacuum Pump, Backup Power and Electronic Flow Controller

APPENDIX F-3 – ARM INFORMATION

ARM NO.	LOCATION
041C	Cask Unloading Room
060 (CAM Option)	RH Cask Preparation Station
062 (CAM Option)	RH Facility Cask Loading Room

APPENDIX G – GAUGE/INSTRUMENT REQUIREMENTS

Instrument Number/Type/Name	Range	Accuracy	Definition	Setpoints
RM01 CAMs				
Flow Control	0 to 2 CFM	5% of F.S.	Note 1	
Diff Press	0 to 15 psi	±20% of FS	Note 3	
Local Disp Unit	Various	+Various	Note 4	
Local Process Unit	Various	±1% of FS	Note 5	
CMS Readout	Various	±1% of FS	Note 3	
Monitoring alpha	256 Channels	±5 channels	Note 7	
Monitoring Alpha & Beta	1 to 1 million	±10%	Note 8	Table RM I-1
RM05 CAMs				
Flow Control	1 to 2 cfm	±10% of Reading	Note 10	
Diff Press	0 t 15 psi	±20% of FS	Note .	
CMS Readout	Various	±10% of Reading	Note 6	
Monitoring Alpha & Beta	256 Channels	±5 channels	Note 8	
Monitoring gamma (external)	0.01 to 1000 mR/hr	±10% of known field	Note 8	Table RM VII-1
RM02 FASs				
Flow Ind.	Flow Ind. .2 to 2 scfm	±10% of FS	Note 10	N/A
Diff Press	0 to -30 mercury	±1.5% of FS		N/A
Flow Regulation	1 to 2 scfm	±10% of preset flow rate	Note 10	N/A
Vacuum Pressure	0 to -30" mercury	±1.5% of FS		N/A
Vacuum Press Regulation	Max. to 1" mercury	±1" mercury		N/A
RM03 ARMs				
Local Display Unit	0.01 R/hr to 100000 R/hr	±10% of field	Note 8	
CMS Readout	Various	±10% of Reading	Note 6	
PV00 Plant Vac. Sys	Various	Commercial	Note 11	Table RM VI-1

APPENDIX G – GAUGE/INSTRUMENT REQUIREMENTS

Note 1 Flow Control indication on flow controller must be with 5% of full scale of actual flow.

Note 2 Differential pressure signal output must be within .11 psi of actual differential pressure.

Note 3 Indicated differential pressure on LDU meter must be within 3 psi of the input differential pressure signal.

Note 4 Indicated readouts on the LDU meter for linear scales shall agree with the input to the RIC within 2.54% of full-scale reading. Indicated readouts on six decade log scales on the LDU meter shall agree with the input to the RIC in accordance with the following table.

Top Reading in the Decade of Interest	**Tolerance**
.01	+.0034, - .0025
.1	+.0341, - .0254
1	+.341, - .254
10	+3.41 - 2.54
100	+34.1 - 25.4
1000	+341 - 254
10,000	+3410 - 2540
100,000	+34100 - 25400

Note 5 Indicated output from the LPU must be within 1% of the input to the LPU.

Note 6 Indication at the CMR must be within .1% of the input to the CMR from the LPU.

Note 7 Indication of the correct channel peak location must agree with the channel for the isotope being measured within 5.

Note 8 Radiation instrument output must be within 10% of the known radiation at the calibration points as defined by ANSI N323.

Note 10 Indicated flow compared to actual flow agrees within 10% of actual flow.

Note 11 Standard off-the-shelf instrument accuracies meeting normal industry standards usually within ±20%.