Working Copy

U.S. DEPARTMENT OF ENERGY

WASTE ISOLATION PILOT PLANT

PACKAGING AND TRANSPORTATION SYSTEM (PT00)

SYSTEM DESIGN DESCRIPTION (SDD)

SDD PT00

Prepared by

Washington TRU Solutions
Carlsbad, New Mexico

For

U.S. Department of Energy

Cognizant Engineer Jerry Golden / 12/04/06
(Approved for Use) Date

Cognizant Manager Todd Sellmer / 12/06/06
(Approved for Use) Date

Working Copy

TABLE OF CONTENTS

LIST OF FIGURES 3
CHANGE HISTORY 4
SUMMARY 5
1.0 PRIMARY FUNCTIONS 6
2.0 DESIGN REQUIREMENTS 6
2.1 General Requirements 6
2.2 Contact-Handled TRU Waste Packaging (PT01) Requirements 6
2.3 Remote-Handled TRU Waste Packaging (PT02) Requirements 7
2.4 Payload Container (PT03) Requirements 7
2.5 Transport Trailer (PT04) Requirements 7
2.6 Operational Requirements 7
2.7 Structural Requirements 9
2.8 General Arrangement and Essential Features 9
2.9 Maintenance 9
2.10 In-Service Inspections 10
2.11 Instrumentation and Control 10
2.12 Interfacing Systems 10
2.13 Quality Assurance 11
2.14 Codes and Standards 11
2.15 Reliability Assurance 12
3.0 DESIGN DESCRIPTION 12
3.1 Summary 12
3.2 Detailed System Description 13
3.3 System Performance Characteristics 19
3.4 System Arrangement 19
3.5 Component Design Descriptions 19
3.6 Instrumentation and Control 26
3.7 System Interfaces 26
4.0 OPERATION 45
4.1 Contact-Handled TRU Waste Packaging (PT01) 45
4.2 Remote-Handled TRU Waste Packaging (PT02) 45
4.3 Payload Container (PT03) 47
4.4 Transport Trailer (PT04) 47

Working Copy

LIST OF FIGURES

FIGURE 3-1 TRUPACT-II General Arrangement 27
FIGURE 3-2 Lock Ring Components 28
FIGURE 3-3 HalfPACT General Arrangement 29
FIGURE 3-4 Exploded View of the 72-B Packaging Components 30
FIGURE 3-5 72-B Lid Closure Arrangement 31
FIGURE 3-6 ICV Seal Test Port Leak Check Tool 32
FIGURE 3-7 ICV Seal Test Port 33
FIGURE 3-8 OCV Seal Test and Vent Port 34
FIGURE 3-9 ICV Vent Port 35
FIGURE 3-10 OCV Vent Port Tool 36
FIGURE 3-11 72-B OC/IV Test Port Tool 37
FIGURE 3-12 Standard Waste Box 38
FIGURE 3-13 Ten Drum Overpack 39
FIGURE 3-14 Pipe Overpack 40
FIGURE 3-15 RH Canister 41
FIGURE 3-16 CH Trailer 42
FIGURE 3-17 RH 72-B Trailer 43
FIGURE 3-18 RH 72-B Cask Uprighting Trailer 44

Working Copy

CHANGE HISTORY

REV. NO.	REV. DATE	PAGES/SECTIONS AFFECTED	APPROVED BY
0	9/93	Sections 1.0, 2.0, 3.0, 4.0, 5.0, 6.0, 7.0, & App.	ECP 1-GP93-044 ECO NO. 6862
1	5/2001	All Sections	ECP 1-PT00-011 ECO No. 10,127
2	10/2001	Sections 3.0, Figures 3-1 and 3-3	ECO 10218
3	11/2002	Figure 3-12	ECO 10530
4	01/2006	Section 2.0	ECO 11320
5	12/2006	All Sections	ECO 11561, Addendum 1

SUMMARY

System Design Description SDD-PT00 includes four subsystems that cover specific aspects of Contact-Handled TRansUranic (CH-TRU) and Remote-Handled TRansUranic (RH-TRU) waste packaging and transportation. The Packaging and Transportation subsystems are:

PT01 - Contact-Handled TRU Waste Packaging

PT02 - Remote-Handled TRU Waste Packaging

PT03 - Payload Container

PT04 - Transport Trailer

The CH-TRU and RH-TRU Waste Packaging subsystems provide U.S. Nuclear Regulatory Commission (NRC)-certified U.S. Department of Transportation (DOT) Type B packaging to transport contact-handled and remote-handled TRU waste between Department of Energy (DOE) generator/storage sites and to the Waste Isolation Pilot Plant (WIPP). Packaging include the TRUPACT-II (CH-TRU), HalfPACT (CH-TRU), 10-160B (RH-TRU), and 72-B Cask (RH-TRU). The subsystem also provides tools to open packages for the removal of waste containers and reinstall the lids and the tools for routine maintenance and inspection (including leak checking) of packaging.

The Payload Container subsystem provides DOT Type A and NRC-certified packaging and other related containers for CH-TRU and RH-TRU waste. Payload containers are transported in the Type B packaging described above.

The Transport Trailer subsystem provides specially designed trailers for transporting up to three fully loaded TRUPACT-II packages or, HalfPACT packages, one 10-160B or, one 72-B Cask between DOE generator/storage sites and to the WIPP. TRUPACT-II or HalfPACT trailers, 10-160B, and 72-B Cask trailers are designed to meet the requirements for trailers employed in the highway transport of weight concentrated radioactive loads.

1.0 PRIMARY FUNCTIONS

The Packaging and Transportation System provides the equipment needed to transport CH-TRU and RH-TRU waste to the WIPP for disposal and between various DOE sites within the 48 contiguous states. The specific functions of the system are:

1.1 Provide single and double contained, NRC-certified DOT Type B packaging.

1.2 Provide the tools needed to operate and leak test DOT Type B packaging.

1.3 Provide DOT Type A and NRC-certified packaging and other related payload containers.

1.4 Provide trailers designed to meet DOT requirements for trailers employed in the highway transport of weight concentrated radioactive loads for Type B packaging. Selected fleet trailers also comply with ANSI N14.30.

2.0 DESIGN REQUIREMENTS

The functional classifications are defined in the Documented Safety Analysis (DSA) and the General Plant Design Description (GPDD).

2.1 General Requirements

2.1.1 Wherever possible, commercially available equipment, components, and tools are utilized. The equipment is purchased to an equipment specification and modified as necessary to meet the specific needs of the WIPP program.

2.2 Contact-Handled TRU Waste Packaging (PT01) Requirements

2.2.1 Packaging systems will be NRC-certified as meeting the requirements set forth in 10 CFR Part 71, "Packaging and Transportation of Radioactive Material" with the issuance of a Certificate of Compliance for Radioactive Materials Packages (C of C).

2.2.2 Packaging systems will be designed to be transported without requiring special state or Federal permits when practical.

2.2.3 The materials and dimensions of the tools must be compatible with the equipment with which they are used.

2.3 Remote-Handled TRU Waste Packaging (PT02) Requirements

2.3.1 Packaging systems will be NRC-certified as meeting the requirements set forth in 10 CFR Part 71 with the issuance of a C of C. Note that for the 10-160B Cask, Duratek is the design authority and the license holder. The Duratek role and the WTS role for 10-160B Casks are defined in a Memorandum of Understanding (MOU) between Duratek and WTS.

2.3.2 Packaging systems will be designed to be transported without requiring special state or Federal permits when practical. The 10-160B cask and trailer require overweight permits.

2.3.3 The materials and dimensions of the tools must be compatible with the equipment with which they are used.

2.4 Payload Container (PT03) Requirements

2.4.1 Payload containers will either be DOT Type A or NRC-certified packaging.

2.5 Transport Trailer (PT04) Requirements

2.5.1 Trailers will meet the requirements of ANSI N14.30, *Nuclear Materials - Semi-Trailers Employed in the Highway Transport of Weight-Concentrated Radioactive Loads*, and/or DOT requirements for over-the-road trailers.

2.5.2 Trailers designed to transport WIPP owned Type B Packages without requiring special state or Federal permits. The 10-160B trailer is the exception.

2.5.3 Trailers are provided to transport the TRUPACT-II/HalfPACT Mobile Loading Units (MLU) and the RH-TRU 72-B Mobile Loading Units.

2.6 Operational Requirements

2.6.1 Only NRC-certified DOT packaging will be used to transport TRU waste to WIPP. Shipping packages will arrive by over-the-road trailers. Packaging will include:

- TRUPACT-II (for CH-TRU waste)
- HalfPACT (for CH-TRU waste)
- 10-160B (for RH-TRU waste)
- 72-B Cask (for RH-TRU waste)

2.6.2 Only DOT Type A or NRC-certified packaging will be used as payload containers. Packaging will include:

- 55-gallon Drum
- Standard Waste Box (SWB)
- Pipe Overpacks
- Ten Drum Overpack (TDOP)
- 85-gallon Drum
- RH-TRU Welded Lid Canisters
- RH-TRU Removable Lid Canisters
- Others as identified in SARP revisions

2.6.3 Packaging operations, including the use of packaging tools, are accomplished per the applicable C of C and Operation & Maintenance (O&M) manual.

2.6.4 All transportation operations will be performed in accordance with approved operating procedures and in an established sequence, which assures the safety and protection of operating personnel, the public, and the environment.

2.6.5 Tools will be provided to maintain packaging in a serviceable condition. Only tools approved for use will be used for tasks involving packaging.

2.6.6 Containment O-ring seals on all packaging will be tested for sealing efficiency as part of the reassembly operation for any packaging that will transport TRU waste.

2.6.7 Shipping configurations for a single transport trailer are:

- Up to three (3) loaded TRUPACT-II packages
- Up to three (3) loaded HalfPACT packages
- One (1) loaded RH-TRU 72-B Cask
- One (1) loaded 10-160B Cask

2.6.8 TRUPACT-II and HalfPACT operations include the loading/unloading packages, installation/removal of the Outer Containment Assembly (OCA) upper assembly and Inner Containment Vessel (ICV) lid, loading/unloading of payloads, and preparation of empty packaging for transport. 72-B Cask operations include the loading/unloading packages, installation/removal of Outer Containment (OC) lid, installation/removal of Inner Vessel (IV) lid, loading/unloading of payloads, and preparation of empty packaging for transport.

2.6.9 Transport trailers will be operated in accordance with the applicable O&M manual.

Working Copy

2.7 Structural Requirements

2.7.1 Packaging will meet the structural requirements of 10 CFR Part 71 and 49 CFR Part 173, "Shippers - General Requirements for Shipments and Packaging."

2.7.2 Any equipment subject to possible contamination will be fabricated from stainless steel where possible, and be free of cracks, crevasses, and internal corners that could inhibit proper decontamination.

2.7.3 Structural carbon steel components will be protected from atmospheric corrosion by paint or other suitable coating.

2.8 General Arrangement and Essential Features

2.8.1 The payload within each TRUPACT-II will be within 55-gallon drums, SWBs, pipe overpack, a TDOP, or others as identified in SARP revisions. A single TRUPACT-II can transport 14, 55-gallon drums, two SWBs, 14 pipe overpacks, or one TDOP. A SWB is capable of containing up to four 55-gallon drums, one bin, or other appropriately prepared waste. A TDOP can contain up to ten 55-gallon drums, one SWB, or other appropriately prepared waste.

2.8.2 The payload within each HalfPACT will be within 55-gallon drums, SWBs, pipe overpacks, or 85-gallon drum overpacks or others as identified in SARP revisions. A single HalfPACT can transport seven 55-gallon drums, one SWB, seven (7) pipe overpacks, or four 85-gallon drum overpacks. The lightweight design of the HalfPACT packaging allows the efficient transport of heavier-than-average payloads, thereby reducing the total number of radioactive shipments.

2.8.3 The payload within each 72-B Cask will be within one RH canister.

2.8.4 The payload within each 10-160B Cask will be within 55-gallon drums.

2.9 Maintenance

2.9.1 Tools will be maintained in accordance with the manufacturer’s recommendations as applicable.

2.9.2 Packaging will be maintained in accordance with the applicable C of C and O&M manual.

2.9.3 Transport trailers will be maintained in accordance with the applicable O&M manual.

2.9.4 Routine maintenance of packaging will include, but not be limited to: O-ring seal replacement and liquid penetrant and corrosion inspections. Following seal replacement or sealing surface repair, a maintenance verification leak test is performed to verify containment integrity of the packaging. Annual visual inspections, dimensional inspections, ICV interior surfaces inspections, and five year structural pressure tests are performed in accordance with applicable O&M manual.

2.9.5 Routine maintenance of transport trailers will include, but not be limited to: 49 CFR Part 396, "Inspection, Repair, and Maintenance" criteria, trailer inspections and component inspections, adjustments, cleaning, and lubrication.

2.9.6 Due to the design of trailer, qualified service representatives must perform certain maintenance activities. These activities are related to the main frame of the chassis and other components, including the tiedown assemblies.

2.10 In-Service Inspections

2.10.1 Prior to shipment, an assembly verification leak test is performed to determine leaktightness of the package.

2.10.2 Minor scrapes and damage to seals will be noted in the documentation that accompanies the empty packaging to the generator site. Seals that are obviously unusable (severe damage, separated, etc.) will be replaced, but the replacements may not be leak tested (to avoid failure indications at the generator/storage site due to saturating the seal with helium).

2.10.3 Periodic inspections of the transport trailer will include, but not be limited to: pre- and post-trip inspections of the chassis and suspension, tiedowns, axles, brakes, tires, wheels, and landing gears.

2.11 Instrumentation and Control

None

2.12 Interfacing Systems

2.12.1 The primary system interface with the Packaging and Transportation System (PT00) is WH00, Waste Handling System.

2.13 Quality Assurance

2.13.1 To assure that the required quality is achieved for all aspects and activities of the WIPP, a comprehensive Quality Assurance (QA) program will be implemented and controlled in conformance with 10 CFR §830.120, "Quality Assurance Requirements", and ASME NQA-1, "Standard Quality Assurance Program for Nuclear Facilities", as set forth in the U.S. Department of Energy Carlsbad Field Office (DOE-CBFO) Quality Assurance Program Description CAO-94-1012 (QAPD).

For work that is performed on the 10-106B Cask by Duratek, as defined by the MOU, the Duratek 10 CFR 71, Subpart H Quality Assurance Program will apply.

2.13.2 Design specifications, equipment specifications, technical specifications, and drawings for the system, its components and equipment, and services related thereto will contain QA program requirements appropriate to the item or scope of work being defined or specified. These documents will also define QA practices such as inspections, examinations, and tests appropriate to the specified item or service.

2.13.3 The QA program for procurement, design, fabrication, assembly, testing, maintenance, repair, modification, and use of packaging will be equivalent to 10 CFR 71, Subpart H, "Quality Assurance", as set forth in DOE Order 460.1-1, Packaging and Transportation Safety".

2.14 Codes and Standards

Listed below are the codes, standards, regulatory requirements, DOE Orders, etc., to be applied to the system design, construction, and operation of the Packaging and Transportation System.

- 10 CFR §830.120, "Quality Assurance"
- 10 CFR Part 71, "Packaging and Transportation of Radioactive Materials"
- 49 CFR Part 173, "Shippers General Requirements for Shipments and Packaging"
- 49 CFR Part 178, "Specifications for Packagings"
- 49 CFR Part 392, "Driving of Commercial Motor Vehicles"
- 49 CFR Part 396, "Inspection, Repair, and Maintenance"

- 49 CFR Part 571, "Federal Motor Vehicle Safety Standards"
- ANSI N14.30, *Nuclear Materials - Semi-Trailers Employed in Highway Transport of Weight-Concentrated Radioactive Loads*
- Transport of Weight-Concentrated Radioactive Loads - Design, Fabrication, and Maintenance
- ASME NQA-1, *Standard Quality Assurance Program for Nuclear Facilities*
- DOE Order 460.1-1, *Packaging and Transportation Safety*
- NRC Certificate of Compliance (C of C) No. 9204, 10-160B
- NRC Certificate of Compliance (C of C) No. 9212, RH-TRU 72-B
- NRC Certificate of Compliance (C of C) No. 9218, TRUPACT-II
- NRC Certificate of Compliance (C of C) No. 9279, HalfPACT
- Safety Analysis Report for the Model No. CNS 10-160B Package (SARP), NRC Docket Number 71-9204
- Safety Analysis Report for the RH-TRU 72-B Waste Shipping Package (SARP), NRC Docket Number 71-9212
- Safety Analysis Report for the TRUPACT-II Waste Shipping Package (SARP), NRC Docket Number 71-9218
- Safety Analysis Report for the HalfPACT Waste Shipping Package (SARP), NRC Docket Number 71-9279

2.15 Reliability Assurance

Not Applicable

3.0 DESIGN DESCRIPTION

3.1 Summary

TRU waste packaging are used to carry CH-TRU and RH-TRU waste between DOE generator/storage sites and to the WIPP. Specially designed trailers transport:

- Up to three (3) fully loaded TRUPACT-II packages
- Up to three (3) fully loaded HalfPACT packages

- One (1) loaded RH-TRU 72-B Cask
- One loaded 10-160B Cask

Special tools are provided to operate and leak test packaging.

3.2 Detailed System Description

3.2.1 TRUPACT-II

The TRUPACT-II is a stainless steel and polyurethane foam insulated right circular cylinder shipping container. It is designed to provide double containment for shipment of CH-TRU waste. Figure 3-1 shows the general arrangement of the TRUPACT-II.

The Outer Containment Assembly (OCA) consists of a lid and body, composed of 1/4-in. thick inner stainless steel shell that comprises the outer containment vessel (OCV) boundary, approximately 10-in. of thermal and impact absorbing polyurethane foam, and an external stainless steel shell. The lid internal and external top surfaces are domed. The body internal surface is domed and the external surface bottom is flat. Three lifting interfaces are supplied on the lid for handling the lid. Two forklift slots in the body base are used for handling the entire loaded OCA. When the lid is installed on the body the overall height is approximately 122-in. and overall diameter is approximately 94-in. A tapered sealing flange on the lid mates with a similar sealing flange on the body. The body sealing flange contains two main O-rings. Figure 3-2 shows containment components of the OCA. A removable brass plug in a seal test port allows testing of the upper main O-ring seals during loading operations. The lid is secured to the body with a rotating locking ring located on the lid sealing flange. Six fasteners secure the lock ring from rotating during shipment. A single vent port comprises the only containment penetration into the OCV cavity. A removable brass plug in the vent port allows access to the cavity during loading and unloading operations.

The Inner Containment Vessel (ICV) consists of a stainless steel shell lid and body. The outside dimensions of the ICV are approximately 73-in. diameter and 98-in. height. Both the lid and body ends are domed to mate with the interior cavity of the OCV. Three lifting sockets in the lid provide the lifting interface for the lid or an empty (contents not installed) lid/body assembly. Aluminum honeycomb spacers inside the lid and body domes provide impact protection to the domes and a flat surface on which the packaging contents are installed either directly or on a pallet that will accommodate up to 7 drums. A tapered sealing flange on the lid mates with a similar sealing flange on the body. The body sealing flange contains two main O-ring seals. Both a silicone-debris seal and an O-ring wiper seal are contained on the lid sealing flange to preclude debris ingress into the main O-ring seal areas.

A removable brass plug in a seal test port allows testing of the upper main O-ring seal during loading operations. The lid is secured to the body by a rotating locking ring located on the lid sealing flange. Three fasteners secure the lock ring from rotating during shipment. A single vent port comprises the only containment penetration into the ICV cavity. A removable inner brass plug in the vent port allows access to the ICV cavity. A removable outer brass plug in the vent port allows for helium purging of the ICV upper main O-ring seal and the volume between the inner and outer plug for subsequent leakage-testing.

The cavity available for the contents is a cylinder of approximately 73-in. diameter and 75-in. height. The package weighs not more than 19,250 lb and has a maximum allowable payload weight of 7,265 lb.

Tools are provided to open packages for the removal of waste containers and reinstall the lids. Tools are also provided for routine maintenance and inspection (including leak checking) of packaging to maintain them according to the applicable C of C. Tests are performed to confirm integrity of the containment seals before the package is released for transportation.

A detailed description of the TRUPACT-II and associated specifications is located in the TRUPACT-II SARP. Drawings are referenced in the C of C.

3.2.2 HalfPACT

The HalfPACT is a stainless steel and polyurethane foam insulated right circular cylinder shipping container. It is designed to provide double containment for shipment of CH-TRU waste. Figure 3-3 shows the general arrangement of the HalfPACT.

The Outer Containment Assembly (OCA) consists of a lid and body, composed of 1/4-in. thick inner stainless steel shell that comprises the outer containment vessel (OCV) boundary, approximately 10-in. of thermal and impact absorbing polyurethane foam, and an external stainless steel shell. The lid internal and external top surfaces are domed. The body internal surface is domed and the external surface bottom is flat. Three lifting interfaces are supplied on the lid for handling the lid. Two forklift slots in the body base are used for handling the entire loaded OCA. When the lid is installed on the body the overall height is approximately 92-in. and overall diameter is approximately 94-in. A tapered sealing flange on the lid mates with a similar sealing flange on the body. The body sealing flange contains two main O-rings. The OCA containment components of the HalfPACT are like the TRUPACT-II shown in Figure 3-2. A removable brass plug in a seal test port allows testing of the upper main O-ring seals during loading operations. The lid is secured to the body with a rotating locking ring located on the lid sealing flange. Six fasteners secure the lock ring from rotating

during shipment. A single vent port comprises the only containment penetration into the OCV cavity. A removable brass plug in the vent port allows access to the cavity during loading and unloading operations.

The Inner Containment Vessel (ICV) consists of a stainless steel shell lid and body. The outside dimensions of the ICV are approximately 73-in. diameter and 69-in. height. Both the lid and body ends are domed to mate with the interior cavity of the OCV. Three lifting sockets in the lid provide the lifting interface for the lid or an empty (contents not installed) lid/body assembly. Aluminum honeycomb spacers inside the lid and body domes provide impact protection to the domes and a flat surface on which the packaging contents are installed either directly or on a pallet that will accommodate up to 7drums. A tapered sealing flange on the lid mates with a similar sealing flange on the body. The body sealing flange contains two main O-ring seals. Both a silicone-debris seal and an O-ring wiper seal are contained on the lid sealing flange to preclude debris ingress into the main O-ring seal areas. A removable brass plug in a seal test port allows testing of the upper main O-ring seal during loading operations. The lid is secured to the body by a rotating locking ring located on the lid sealing flange. Three fasteners secure the lock ring from rotating during shipment. A single vent port comprises the only containment penetration into the ICV cavity. A removable inner brass plug in the vent port allows access to the ICV cavity. A removable outer brass plug in the vent port allows for helium purging of the ICV upper main O-ring seal and the volume between the inner and outer plug for subsequent leakage-testing.

The cavity available for the contents is a cylinder of approximately 73-in. diameter and 45-in. height. The package weighs not more than 18,000 lb when loaded with the maximum allowable contents of 7,600 lb.

Tools are provided to open packages for the removal of waste containers and reinstall the lids. Tools are also provided for routine maintenance and inspection (including leak checking) of packaging to maintain them according to the applicable C of C. Tests are performed to confirm integrity of the confinement seals before the package is released for transportation.

A detailed description of the HalfPACT, associated specifications, and drawings is located in the HalfPACT SARP.

3.2.3 RH-TRU 72-B Cask

The 72-B Cask is a stainless steel, lead-shielded cask designed to provide double containment for shipment of transuranic waste materials. The packaging consists of a cylindrical stainless steel and lead cask body, a separate inner stainless steel vessel, and foam-filled impact limiters at each end of the cask body. Figure 3-4 shows the general arrangement of the 72-B Cask.

The cask body (outer cask body) consists of a 1 ½-in. thick, 41 ⅛-in. outer diameter stainless steel outer shell, and a 1-in. thick, 32 ⅜-in. inside diameter stainless steel inner shell, with 1 ⅞-in. of lead shielding between the two shells. The cask bottom is 5-in. thick stainless steel plate. The cask is closed by a 6-in. thick stainless steel lid, and 18, 1 ¼-in. diameter bolts. The main closure lid has a double bore-type O-ring seal. The containment seal is the inner butyl O-ring seal, which is leak testable. The cask lid has a single vent/sampling port that is sealed with leak testable butyl O-ring seals. Figure 3-5 shows the lid closure arrangement of the 72-B Cask.

The separate inner vessel consists of a ⅜-in., 32-in. outside diameter stainless steel shell, and a 1 ½-in. thick stainless steel bottom plate. The inner vessel is closed by a 6 ½-in. thick stainless steel lid, and eight, ⅞-in. diameter bolts. The inner vessel closure lid has three bore-type O-ring seals. The containment seal is the middle butyl O-ring seal, which is leak testable. The inner vessel lid has a helium backfill port and a combination vent/sampling port that are sealed with leak-testable butyl O-ring seals.

A polyurethane foam-filled stainless steel impact limiter is attached to each end of the cask body using six, 1 ¼-in. diameter bolts. The radioactive contents are packaged within a waste canister that is placed in the inner vessel. The canister uses a 26-in. outside diameter 1/4-in. thin-wall cylinder fabricated of carbon steel as the outer shell. The canister is part of the packaging contents and, as such, is not required to meet the containment requirements of 10 CFR 71. The package weighs not more than 45,000 lb when loaded with the maximum allowable contents of 8,000 lb.

Tools are provided to open packages for the removal of waste containers and reinstall the lids. Tools are also provided for routine maintenance and inspection (including leak checking) of packaging to maintain them according to the applicable C of C. Tests are performed to confirm integrity of the confinement seals before the package is released for transportation.

A detailed description of the 72-B Cask, associated specifications, and drawings is located in the 72-B Cask SARP.

Working Copy

3.2.4 10-160B Cask

The 10-160B Cask is a carbon steel, lead lined shipping cask designed to provide single containment for shipment of a variety of payloads that include transuranic waste materials. The packaging consists of a cylindrical carbon steel and lead cask body with carbon steel primary and secondary lids. Foam filled impact limiters are attached to the top and the bottom of the cask body.

The cask outer body consist of a 2-in. thick outer shell that is about 78-in. outer diameter. The inner shell is 1-⅛ in. thick and has a 68-in. inside diameter. There is lead shielding 1-⅞ in. thick between the outer body and the inner shell. The cask base is 5-½ in. thick carbon steel. The cask is closed by a 5-½ in. thick primary lid with a 5-½ in. thick secondary lid and 1-¾ in. bolts. A 12 gage stainless steel liner is welded to the cask cavity and lid surfaces to protect accessible areas from contamination,

The primary and secondary lids have face type double O-ring seals. All four O-rings for the face type lid seals are made of silicon and have a cross sectional diameter of 0.285-in. The primary lid is sealed with 24 bolts and the secondary lid is sealed with 12 bolts.

The spaces between each set of two face type lid O-ring seals (primary and secondary lids) are provided with a seal test port for leak testing primary and secondary lid seals. Plugs for the seal test ports are self sealing. The secondary lid has vent port. Each port is sealed with a silicon rubber gasket.

The WIPP 10-160B Cask is not equipped with the optional drain and vent port plugs with O-rings. Duratek drawings also have provisions for an optional insert for shielding.

Impact limiters have stainless steel shells filled with polyurethane foam. The Upper Impact Limiter attaches to the Lower Impact Limiter, above and below the cask, with 8 ratchet binders. The ratchet binders have a 1-in. diameter threaded shank and are rated at 45,000 lb.

Radioactive contents are packaged inside 55-gallon drums in the cask. A basket (or pallet) is used to insert and remove the payload of ten 55-gallon drums. Maximum weight of the contents, including the basket and drums, is 14,500 lb.

Maximum gross weight of a loaded 10-160B Cask, with contents is 72,000 lb, trailer weight is 15,500 lb and tractor weight is typically 19,000 lb for 106,500 lb system maximum weight. This exceeds the 80,000 lb legal weight limit. It is exceeded, regardless of whether the cask is full or empty, so overweight permits are required. The cask weighs 57,500 lb empty, for a 92,000 lb unloaded system total weight.

Special tools are provided for venting, for removing the payload and for leak testing. Commercially available tools are used to open, remove, reinstall and to replace the lid. Tools are also provided for routine maintenance and inspection (including leak testing) of the packaging to maintain it according to the C of C. Tests are performed to confirm the integrity of the confinement seals before the package is released for transportation.

A detailed description of the 10-160B Cask, associated specifications and drawings are located in the 10-160B Cask SARP.

3.2.5 Payload Containers

Payload container specifications and assembly drawings are located in the applicable SARP. Empty 55-gallon drums used as dunnage to complete a payload (14 drums for TRUPACT-II or seven 7 drums for HalfPACT) must also meet the specifications identified in the applicable SARP. Component descriptions are located in Section 3.5.

3.2.6 TRUPACT-II/HalfPACT Transport Trailer

The TRUPACT-II/HalfPACT trailer was designed to meet DOT and ANSI N14.30 requirements for trailers employed in the highway transport of weight concentrated radioactive loads. The trailer is equipped with a full-size spare tire and wheel, spare tire holder, and tire changing tools that are mounted over the gooseneck. Figure 3-16 shows the TRUPACT-II/HalfPACT trailer.

3.2.7 RH-TRU 72-B Cask and 10-160B Transport Trailer

The RH 72-B Cask Static (non-rotating) trailer was designed to meet DOT and ANSI N14.30 requirements for trailers employed in the highway transport of weight concentrated radioactive loads. The trailer is equipped with a full-size spare tire and wheel, and spare tire holder mounted at the rear of the trailer. Figure 3-17 shows the 72-B Cask transport trailer.

The RH-TRU 72-B Cask Uprighting trailer was designed to meet DOT and ANSI N14.30 requirements for trailers employed in the highway transport of weight concentrated radioactive loads. The trailer is equipped with a specially designed rotating mechanism designed to rotate the RH-TRU 72-B cask to the vertical position while on the trailer. The trailer is equipped with a full-size spare tire and wheel, and spare tire holder mounted at the rear of the trailer. Figure 3-18 shows the RH-TRU 72-B Cask uprighting trailer.

The 10-160B Cask trailer was designed to meet DOT and ANSI N14.30 requirements for trailers employed in the highway transport of weight concentrated radioactive loads. The trailer is equipped with a full-size spare tire, wheel and toolbox.

3.2.8 TRUPACT-II/HalfPACT Mobile Loading Unit (MLU) Transport Trailer

The MLU is a flatbed gooseneck trailer that is 8.5 ft wide, 40 ft long, equipped with ISO tiedowns and is designed to be pulled by a conventional fifth wheel tractor. The trailer mobilizes equipment provided from WH00 necessary to load or unload a TRUPACT-II or HalfPACT.

3.3 System Performance Characteristics

TRU waste packaging performance characteristics are identified in the applicable SARP.

3.4 System Arrangement

A detailed description of TRU waste packaging, including drawings, is located in the applicable SARP. The transport trailer descriptions are located in the applicable O&M manual and related drawings.

3.5 Component Design Descriptions

3.5.1 TRUPACT-II/HalfPACT Tools

Leak check tools are provided for use in performing integrity leak check of the TRUPACT-IIs ICV and OCV upper main O-ring seals and vent port plugs and their O-ring seals. These tools are listed below with a description of their specific application.

3.5.1.1 ICV Seal Test Port Leak Check Tool

The ICV seal test port leak check tool is used in conjunction with test equipment to check the ICV upper main O-ring seal integrity. Figure 3-6 shows the ICV Seal Test Port Leak Check Tool. The tool is inserted into the ICV seal test port (after removal of the ICV seal test port plug) to access the area between the ICV main upper and lower O-ring seals. Figure 3-7 shows ICV Seal Test Port. The tool has a quick connection fitting for attachment to the test system.

Working Copy

3.5.1.2 OCV Seal Test Port Leak Check Tool

The OCV tool is physically the same as the ICV seal test port leak check tool except it is longer. The tool is used with test equipment to check the integrity of the OCV upper main O-ring seal. The OCV tool is inserted into the OCV seal test port (after removing the OCV seal test port access cover, thermal plug, and seal test port plug) to access the area between the OCV main upper and lower O-ring seals. Figure 3-8 shows the OCV Seal Test Port and Vent Port.

3.5.1.3 ICV Seal Test Port Plug Installation/Removal Tools

The ICV seal test port plug installation and removal tools are used to install and remove the ICV seal test port plug from the ICV seal test port. The tool has a 6-in. long snap-on driver extension for the ICV. Removal of this plug enables the ICV main O-ring seal area to be accessed for testing.

3.5.1.4 OCV Seal Test Port Plug Installation/Removal Tools

The OCV seal test port plug installation and removal tools are used to install and remove the OCV seal test port plug from the OCV seal test port. These tools are similar to the ICV seal test port plug installation and removal tool except the OCV tool uses a 14-in. long snap-on driver extension. Removal of this plug enables the OCV main O-ring seal area to be accessed for helium leak testing.

3.5.1.5 ICV Vent Port Leak Detection Tools

The ICV vent port leak detection tools are used with testing equipment to test the containment integrity of the ICV outer vent port plug O-ring seal. After the ICV inner and outer vent plugs are installed, the ICV vent port leak detection tool is inserted in the ICV vent port. The tool includes a quick connection fitting so that it can be attached to the testing equipment.

3.5.1.6 OCV Vent Port Leak Detection Tools

The OCV vent port leak detection tools are used to test the containment integrity of the OCV vent port plug with test equipment. After the OCV vent port plug is installed, the OCV vent port leak detection tool is inserted and seated into the OCV vent port plug cover position. A quick connection fitting is provided on the OCV tool for attachment to the test equipment.

3.5.1.7 TRUPACT-II/HalfPACT OCV & ICV Tools

Specific purpose tools are provided for opening and closing the TRUPACT-II/HalfPACT OCV and ICV as well as to perform testing of the TRUPACT-II/HalfPACT O-ring seals. The remaining operational type tools are described below. Although the seal test and vent ports of the OCV and ICV are similar, the tools are not identical.

3.5.1.8 OCV/ICV Outer Vent Plug Removal and Installation Tool

The OCV/ICV outer vent plug removal and installation tool can be inserted into the OCV vent access port to remove the OCV vent plug cover. The same tool can also be used to remove or install the ICV outer vent plug. This is done by removing the pin and socket (used only for the OCV) from the tool and using the tool extension end adapter to remove the ICV outer vent plug. Figure 3-9 shows the ICV Vent Port.

3.5.1.9 OCV Vent Plug Removal/Pressure Relief Tool

The OCV vent plug removal/pressure relief tool can be used to:

- Remove or install the OCV vent port plug
- Vent the cavity between the OCV and ICV (with the facility vacuum system) evacuate or vent the OCV in order to pull the OCV lid down far enough to permit the locking ring to be rotated.
- Perform pressure testing.

Figure 3-10 shows the OCV Vent Plug Removal/Pressure Relief Tool.

The OCV vent plug removal/pressure relief tool can be inserted into the OCV vent access port to remove the OCV vent port plug. The OCV vent plug removal/pressure relief tool includes a pressure relief plug for venting and a quick-connect fitting that can be used for gas sampling, pulling a vacuum, and venting.

3.5.1.10 ICV/OCV Locking Ring Tools

The locking ring tools are T-shaped. The only difference between the ICV and OCV locking ring tools is the radius of the 1/4-in. T-plate and the spacing between the head of the locking fasteners and the T-plate.

The A-frame locking ring tool is used in conjunction with the appropriate T-shaped tool on either the ICV or OCV locking rings. The OCV locking ring tool is placed in the OCV locking ring receptacles (three tools are used each

with the A-frame tool) to manually rotate the locking ring to the unlock or locked position. The ICV locking ring tools are used similarly to rotate the ICV locking ring to the unlock or locked position.

3.5.2 RH-TRU 72-B Cask Tools

3.5.2.1 OC/IV Test Port Tool

The OC and IV test port tool is designed to manipulate the OC or IV gas sampling and seal test port closure bolts for assembly and maintenance verification leak testing. Figure 3-11 shows the OC and IV Test Port Tool.

3.5.3 RH-TRU 10-160B Cask Tools

3.5.3.1 Test Port Tool

The test port tool and the vent port tools are supplied under the WH03 System.

3.5.4 Payload Containers

3.5.4.1 55-gallon Drum

The 55-gallon steel drum has a lid and bolt ring. A gasket, of tubular or foam styrenebutadiene, is required for drum lid closure. An optional, rigid, polyethylene liner and lid may be used inside the drum. The drum has three rolled or swedged type rolling hoops. Each drum is fitted with a carbon composite filter to provide protection from particulate leakage during shipment or build-up of internal pressure.

3.5.4.2 Standard Waste Box (SWB)

The SWB is a DOT 7 Type A steel fabricated box with a welded bottom and a bolted lid closure (Figure 3-12). Maximum gross weight of a loaded SWB is 4,000 lb, and empty weight is approximately 640 lb. The usable internal volume (less the lid) is approximately 66 ft^3; total internal volume is 68 ft^3.

The SWB is made of 10-gage steel (0.134-in.) and is 54.5-in. wide and 71-in. long. Both ends are convex with a 34.5-in. radius. The overall height of the box with the lid in place is approximately 37-in. Two bumpers made from 1-in. square tubular steel are welded to the curved ends of the box, one is 4-in. from the bottom and the other is 7-in. from the top. The box has a flange formed of tubular steel and 42 threaded rivet inserts. The SWB has three lifting clips welded to each of the straight edges of the body flange for use in lifting. The lid is fabricated from 10 gage steel plate, and has a 0.50 in. thick, 1.75 in. wide steel flange welded around the perimeter. A tapped hole is

provided in the center of the lid to accommodate an eyebolt which is used to remove the lid. A 0.5-in. thick EPDM rubber gasket is used to seal the lid to the box.

Four threaded couplings (two on each side) are installed in the flange for inserting carbon composite filters to provide protection from particulate leakage during shipment or build-up of internal pressure.

3.5.4.3 Ten-drum Overpack (TDOP)

The TDOP is a DOT 7 Type A container designed to be used in conjunction with the TRUPACT-II or as a stand-alone packaging. The unit accommodates drums, loose homogeneous materials or, or one (1) SWB. The unit is designed for a gross shipping weight of 6,700 lb with a content net weight of approximately 5,000 lb. Figure 3-13 shows the TDOP.

The TDOP is comprised of a cylindrical main body with a flat profile, bolt-on, continuous gasket lid. It is made of 3/16 in. steel, and measures 73-in. in height and 71-⅛ in. in diameter. Internal pressure relief is through the use of up to ten (10) carbon composite filters installed in the upper perimeter of the body by means of internal pipe couplings. A tapped hole is provided in the center of the lid to accommodate an eyebolt, which is used to remove the lid.

The TDOP has three (3) lift clips located on the top perimeter 120 degrees apart. These lift clips can be used to lift the unit with a sling or they will mate with the lift clips of the TDOP lift fixture adapter used in conjunction with the ACGLF.

3.5.4.4 Pipe Overpack

The pipe overpack consists of a pipe component positioned by fiberboard/plywood dunnage within a 55-gallon drum with a rigid liner and lid. Figure 3-14 shows the pipe overpack.

The pipe component is available in two sizes: 6-in. and 12-in. diameter with various designs to accommodate different shielding requirements. The pipe component body, lid and bolt flange are constructed of stainless steel with an overall length of 27-½ in. A butyl rubber or ethylene propylene O-ring is required for pipe component closure. Both the pipe component and 55-gallon drum are outfitted with a carbon composite filter to provide protection from particulate leakage during shipment or build-up of internal pressure.

3.5.4.5 85-gallon Drum

The term "85-gallon drum" is used to refer to 79-, 83-, and 85-gallon drums. The 85-gallon drum is a steel fabrication drum with a lid and bolt ring. A gasket, of tubular or foam styrenebutadiene, is required for drum lid closure. An optional, rigid, polyethylene liner and lid may be used inside the drum. The drum has three rolled or swedged type rolling hoops. Each drum is fitted with a carbon composite filter to provide protection from particulate leakage during shipment or build-up of internal pressure. "Tall" 85-gallon drums are for use with the HalfPACT only.

3.5.4.6 RH-TRU Welded Lid Waste Canisters

The Welded Lid canister is a DOT 7 Type A cylindrical container designed to confine and handle the payload of the RH-TRU 72-B Cask from initial preparation to final disposal. Figure 3-15 gives a description of a typical RH-TRU Waste Canister. All TRU waste will be loaded directly into the waste canister or into waste containers (e.g., 55-gallon drums or metal cans) overpacked in the canister. The canister is designed for a gross shipping weight of 5,980 lb when loaded with (3) 55-gallon drums, or 5, 250 lb when directly loaded. The canister tare weight is approximately 1,760 lb. The canister uses a 26-in. outside diameter 1/4-in. thin-wall cylinder as the outer shell. The body, lid and lift pintle are constructed of either carbon or stainless steel. Once the canister is loaded the lid is welded in place (fixed lid) to complete the package. Including the lift pintle at the top of the canister, the overall length is 121-in. A carbon composite filter(s) is incorporated either into the pintle or lid to provide protection from particulate leakage during shipment or build-up of internal pressure.

3.5.4.7 RH-TRU Removable Lid Waste Canisters

The Removable Lid canister is a DOT 7 Type A cylindrical container designed to confine and handle the payload of the RH-TRU 72-B Cask from initial preparation to final disposal. Figure 3-15 gives a description of a typical RH-TRU Waste Canister. All TRU waste will be loaded directly into the waste canister or into waste containers (e.g., 55-gallon drums or metal cans) overpacked in the canister. The canister uses a 26-in. outside diameter 1/4-in. thin-wall cylinder as the outer shell. The body, lid and lift pintle are constructed of either carbon or stainless steel. Once the canister is loaded the lid is pressed and locked in place (removable lid) to complete the package. Including the lift pintle at the top of the canister, the overall length is 121-in. A carbon composite filter(s) is incorporated either into the pintle or lid to provide protection from particulate leakage during shipment or build-up of internal pressure. The container is designed for a gross shipping weight of 4,240 lb. The canister tare weight is approximately 1,140 lb.

3.5.5 Transport Trailers

3.5.5.1 TRUPACT-II/HalfPACT Trailers

The trailer chassis is a specialized drop frame trailer design. The trailer chassis overall length and width dimensions are 42 ft, 2-in. and 8 ft, 6-in. respectively. The trailer drop is 26-⅛ in. and occurs 118-⅛ in. from the front of the trailer. The dual axle chassis has been designed to support up to three 17,500 lb containers (or two 19,250 lb and one 14,000 lb containers) under static and dynamic transportation loads for normal highway travel conditions. The chassis has a maximum trailer/container combination gross weight limit of 62,000 lb.

The chassis gooseneck is equipped with a standard 2-in. diameter drop forged, heat treated king pin set at 18-in. from the trailer front sill. The gooseneck is designed to accommodate an 84-in. minimum tractor swing clearance from king pin centerline to rearmost outer corner of tractor frame and rear drive wheel mud flap support.

No special equipment or tools are required to operate the basic trailer. However, a feeler gauge (Go/No-Go gauge), is required for the operation of the trailer tiedown assemblies. The gauge is utilized to verify the trailer tiedown assemblies are exerting the correct preload (controlled by the compression of the spring washers) on the packaging tiedown lugs. The Go/No-Go gauge checks the gap between the compression plate and compression block on Cam Handle Tiedowns, and between the compression plate and the top block on Screw Jack Tiedowns.

3.5.5.2 RH 72-B Trailers

The RH-TRU 72-B static (non-rotating) trailer chassis is a specialized drop frame trailer design. The trailer chassis overall length is 45 ft and width is 8 ft, 6-in. The trailer drop is 23-in. and occurs 148 3/4 in. from the front of the trailer. The chassis gooseneck is equipped with a standard 2-in. diameter king pin set at 18-in. from the trailer front sill. The dual axle chassis has been designed to support one RH-TRU 72-B at a maximum of 45,000 lb under static and dynamic transportation loads for normal highway travel conditions. The chassis weighs approximately 16,400 lb.

The 72-B RH Cask is secured to the trailer by means of two trunnion and two pivot bracket assemblies. The physical locations of the brackets are on the cask support structure.

No special tools are needed to operate the trailer. However, basic hand tools such as a 2-in. square drive torque wrench, 2-in. square drive ratchet, and a 5/8-in. 6-point socket for tightening the trunnion and pivot cap bolts are needed.

The RH 72-B Cask Uprighting Trailer is specially designed with a specially designed rotating mechanism to rotate the RH 72-B Cask into the vertical position while on the trailer. The chassis carries a single RH 72-B Package, which is secured to the trailer by two main trunnion blocks and two trunnion tiedown assemblies located on each side of the trailer. The dual axle chassis is designed to support the fully loaded package weight under static and dynamic transportation loads for normal highway travel. The chassis gooseneck has a standard 2-in. diameter kingpin set 16-in. from the trailer front sill.

The trailer weighs approximately 16,000 lb with a drop-frame design and a trunnion to carry a maximum load of 45,000 lb. The trailer is designed with an air ride load leveling suspension system, ABS brake system, two rear independent leveling jacks, and two front common jacks.

3.5.5.3 10-160B Trailer

The 10-160B Cask trailer is used to transport a single U.S. Department of Transportation (DOT) Type B 10-160B Cask. The cask is transported in the upright position and equipped with steel encased, rigid polyurethane foam impact limiters on the top and bottom. The trailer complies with all DOT safety, identification, and regulatory requirements. The trailer measures approximately 563 in. long by 102 in. in width. The trailer weighs approximately 15,500 lb and is designed to carry a fully loaded 10-160B weighing 72,000 lb. When the trailer is transported over the highway with the 10-160B cask, the 80,000 lb legal weight limit is exceeded, regardless of whether the cask is full or empty. Overweight permits will be required. The three axles are spaced 60 in. apart, and the drop-frame design allows the load bearing main beams to ride 10 in. from the ground. The trailer is designed with an air ride load leveling suspension system, ABS brake system, two rear independent leveling jacks, and two front common jacks. The trailer is used to transport the 10-160B Cask, either loaded or empty.

3.6 Instrumentation and Control

None

3.7 System Interfaces

See Section 2.12.

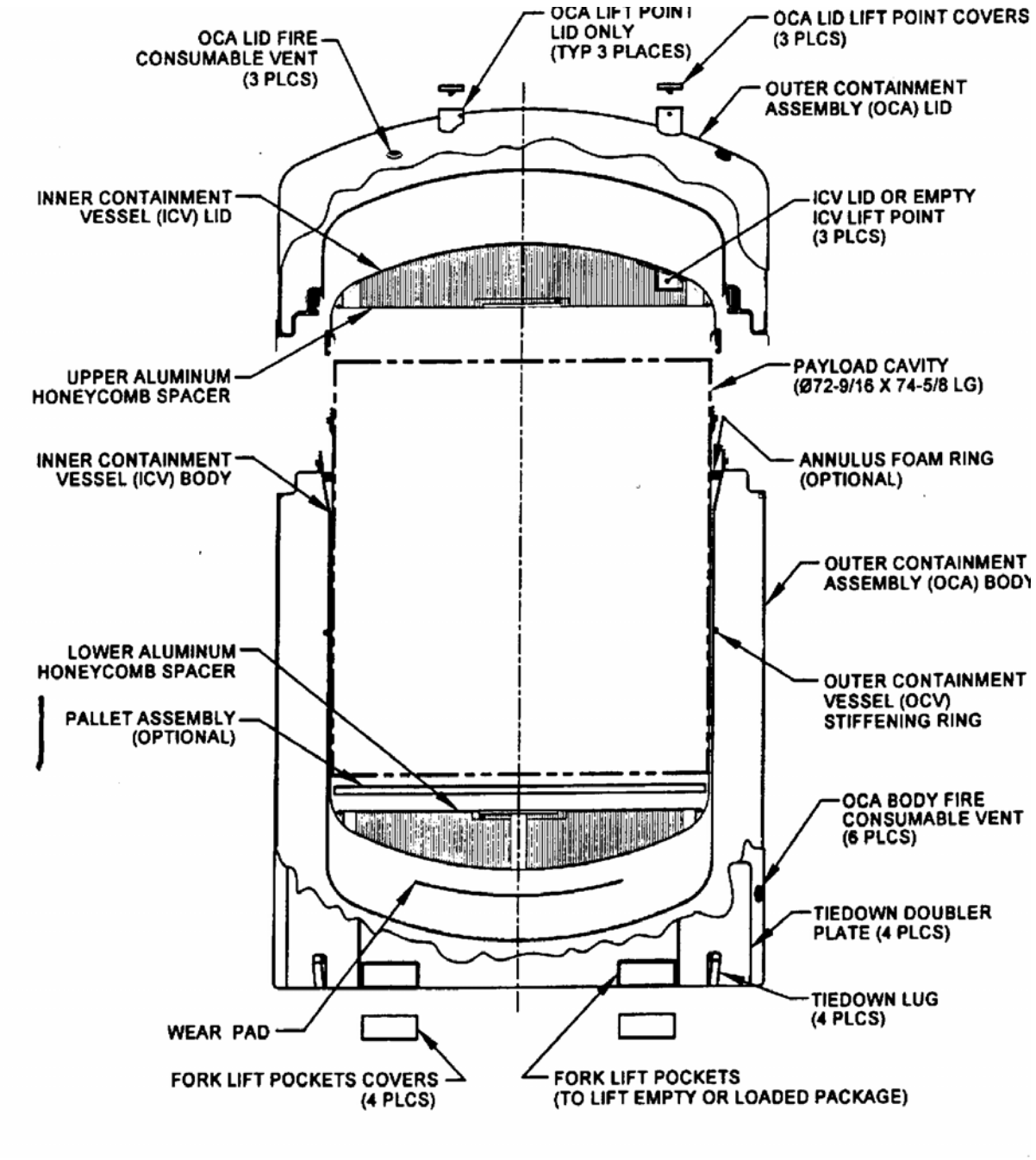

FIGURE 3-1 TRUPACT-II General Arrangement

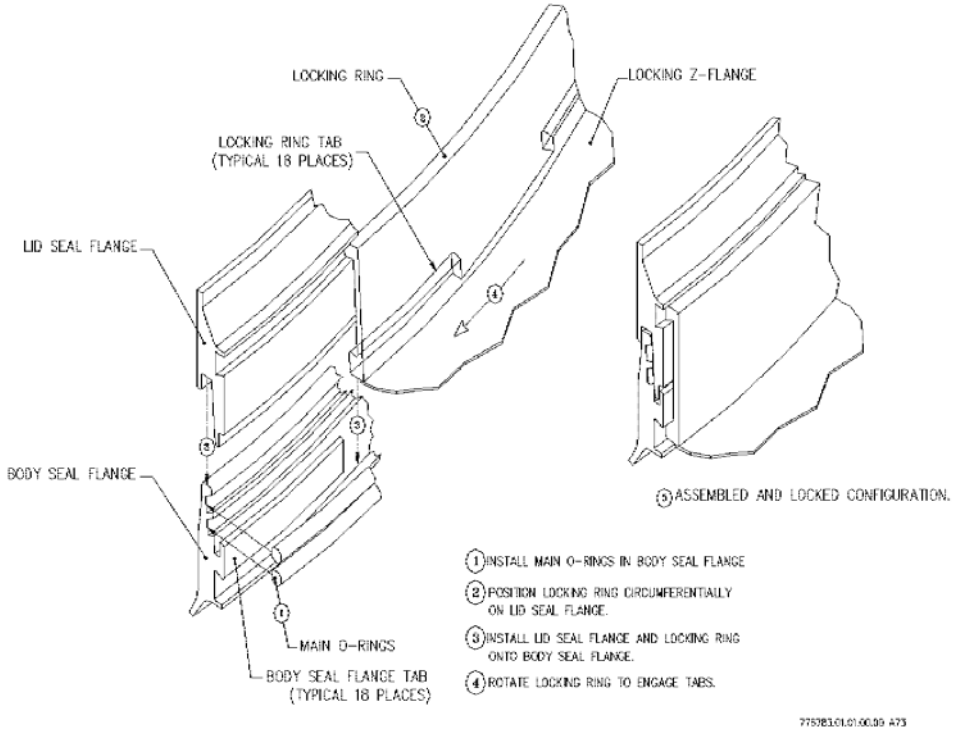

FIGURE 3-2 Lock Ring Components

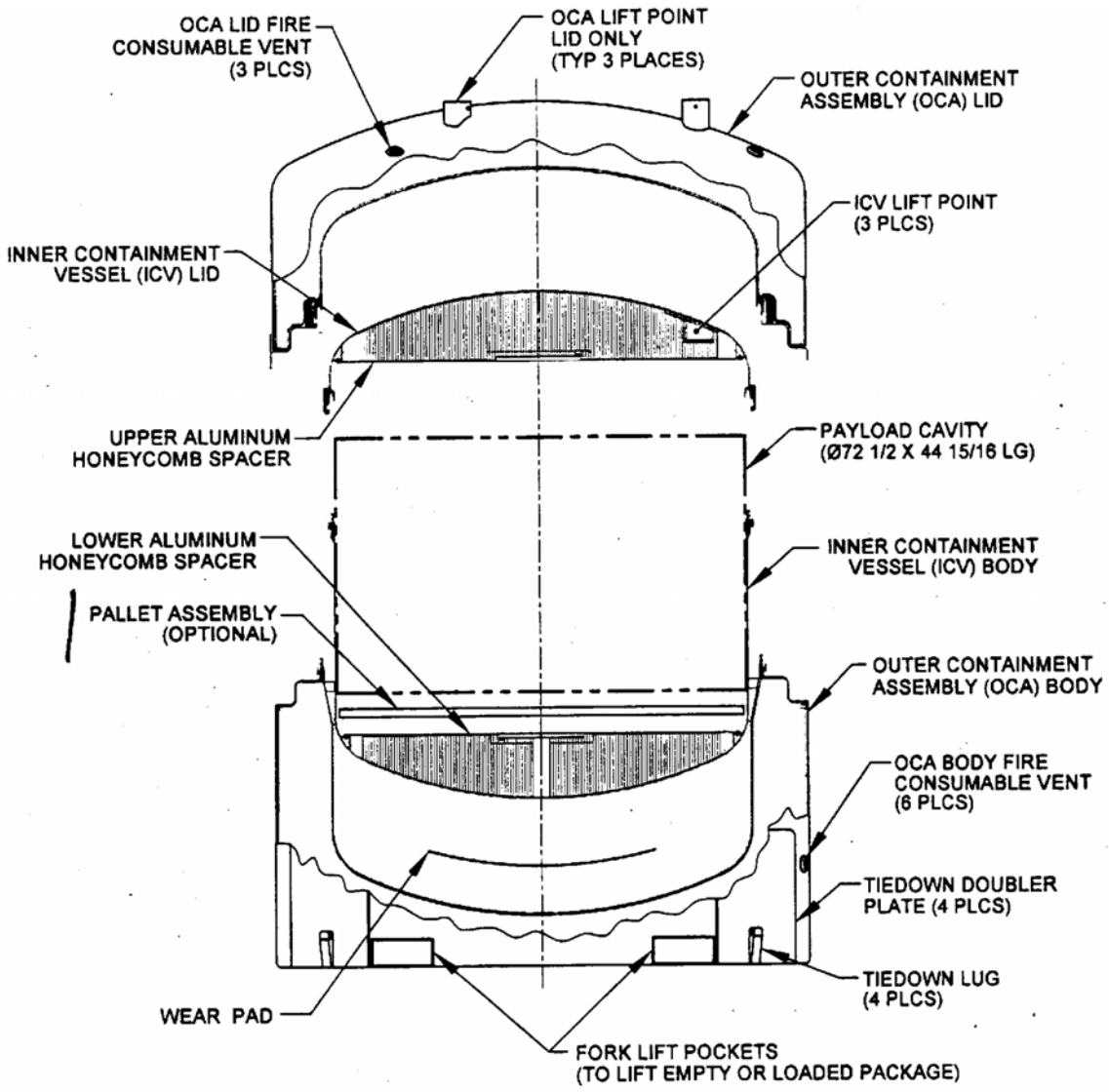

FIGURE 3-3 HalfPACT General Arrangement

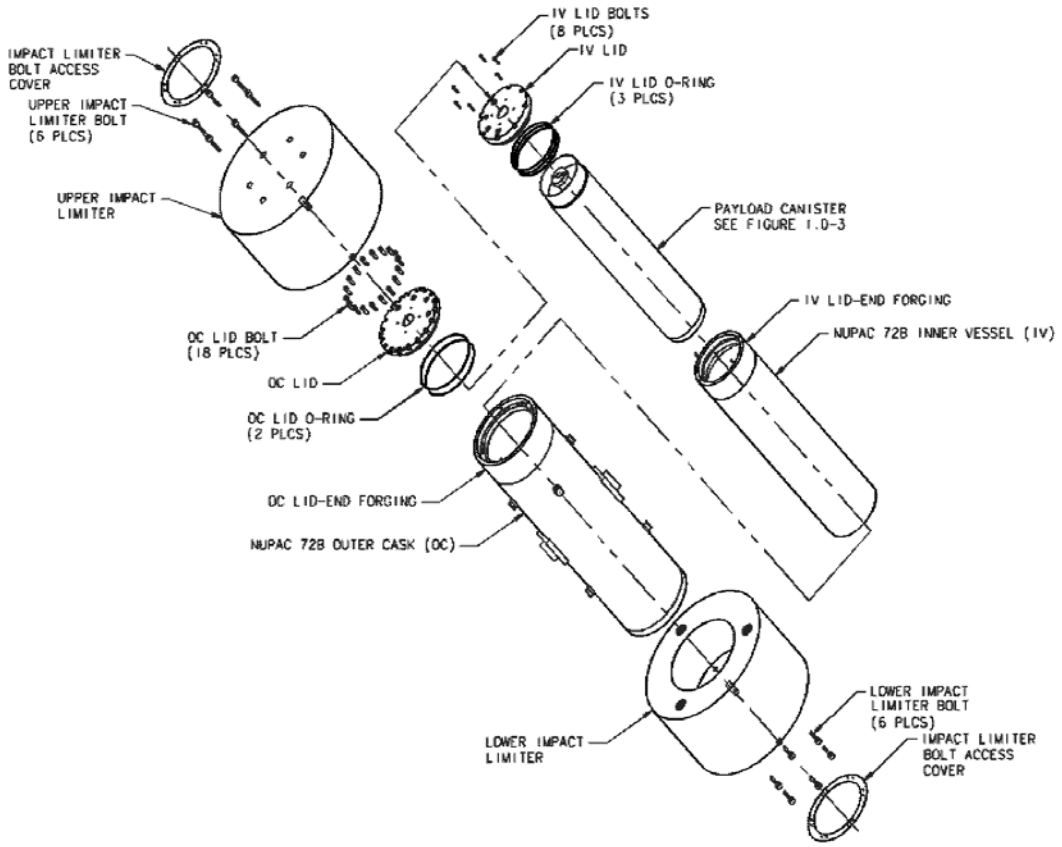

FIGURE 3-4 Exploded View of the 72-B Packaging Components

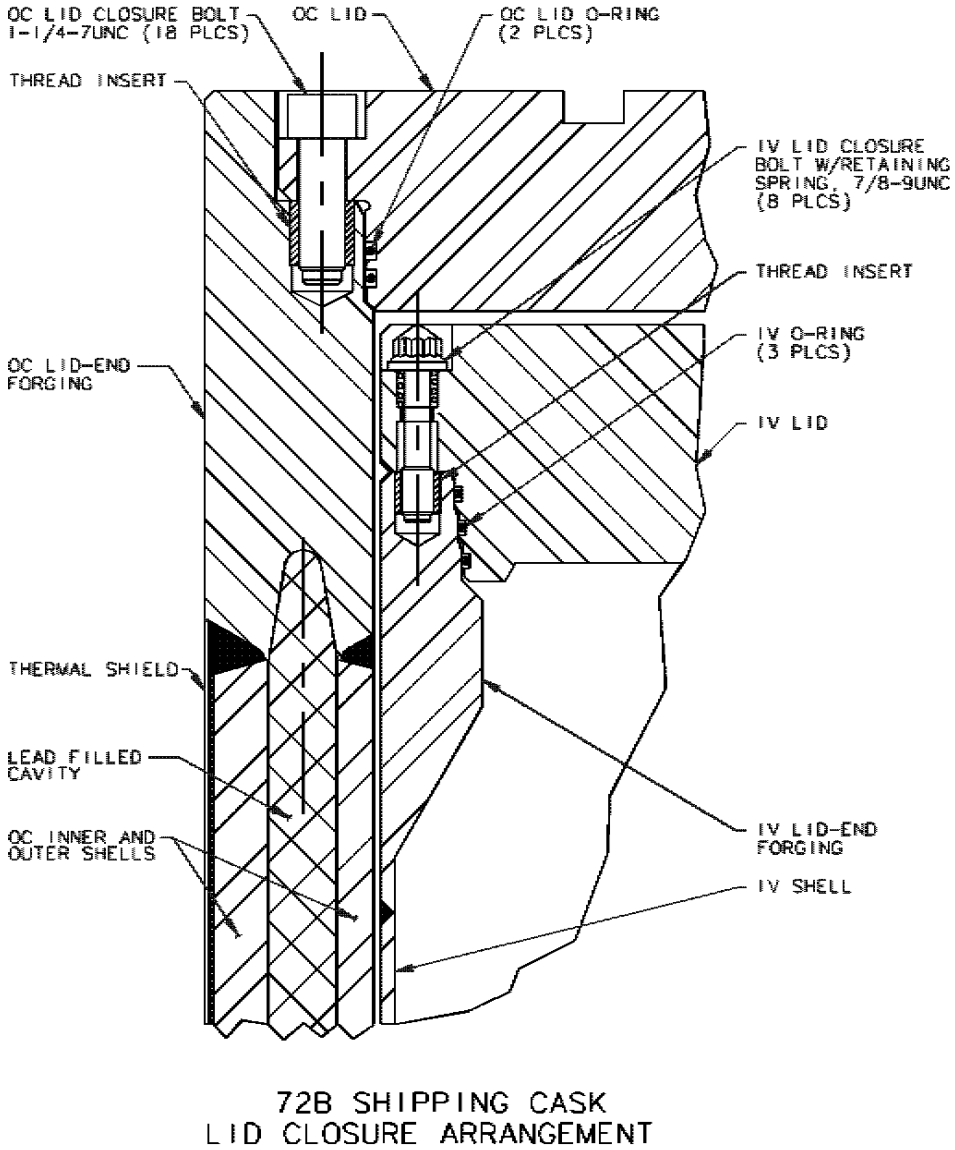

FIGURE 3-5 72-B Lid Closure Arrangement

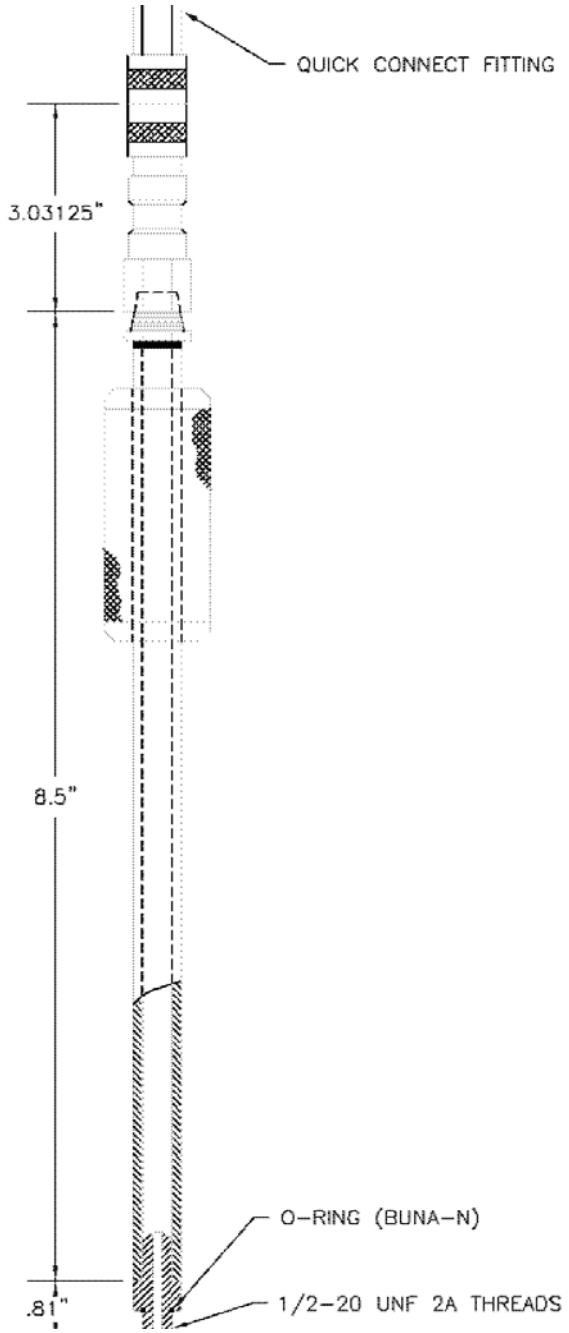

FIGURE 3-6 ICV Seal Test Port Leak Check Tool

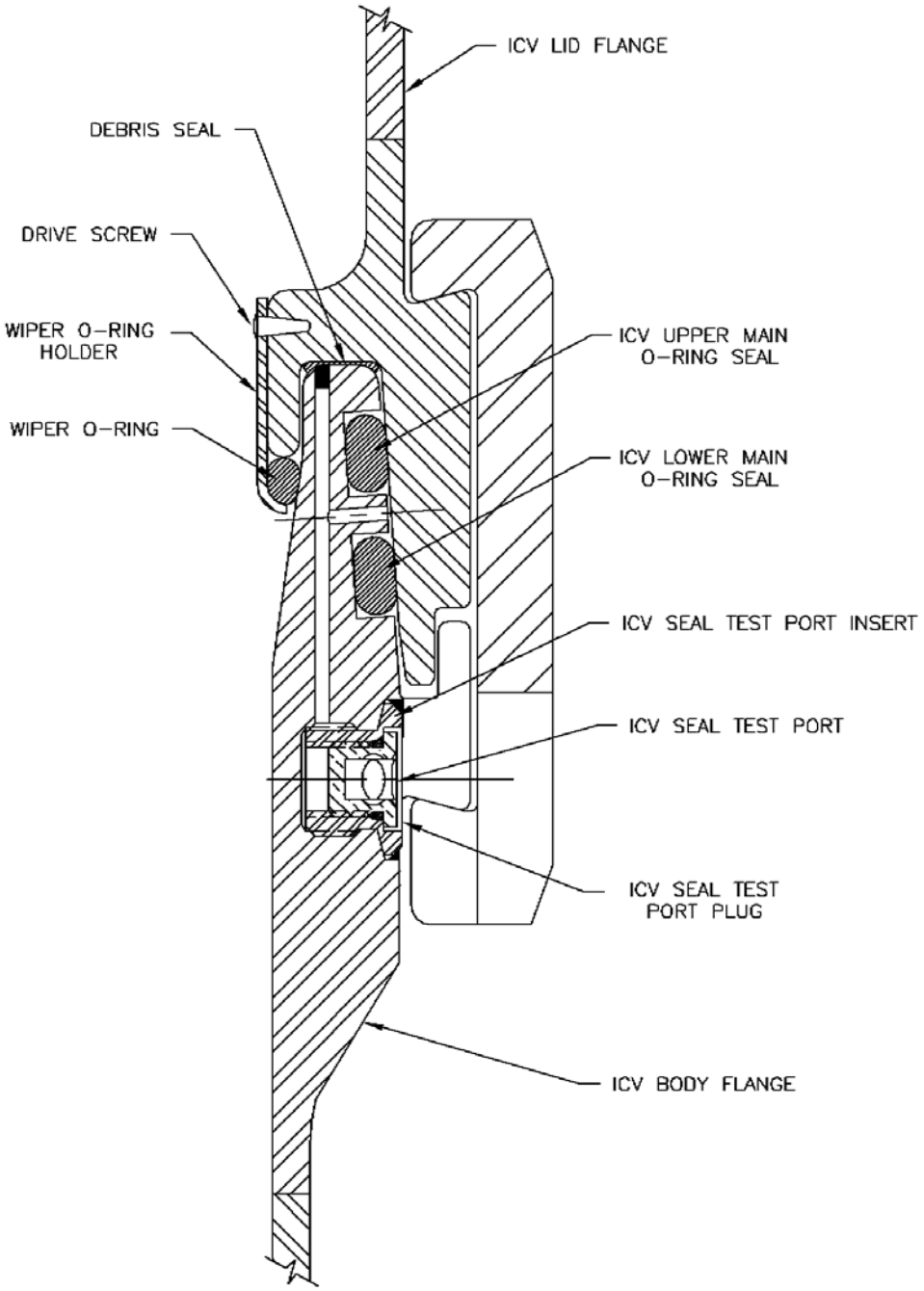

FIGURE 3-7 ICV Seal Test Port

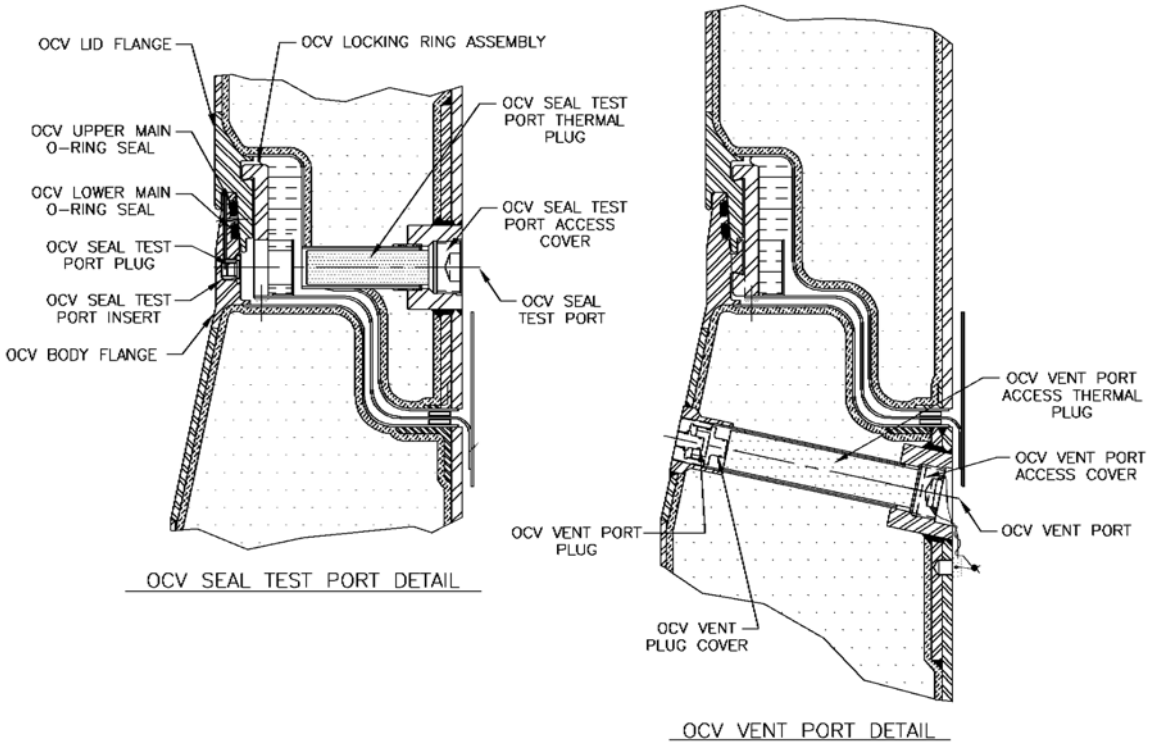

FIGURE 3-8 OCV Seal Test and Vent Port

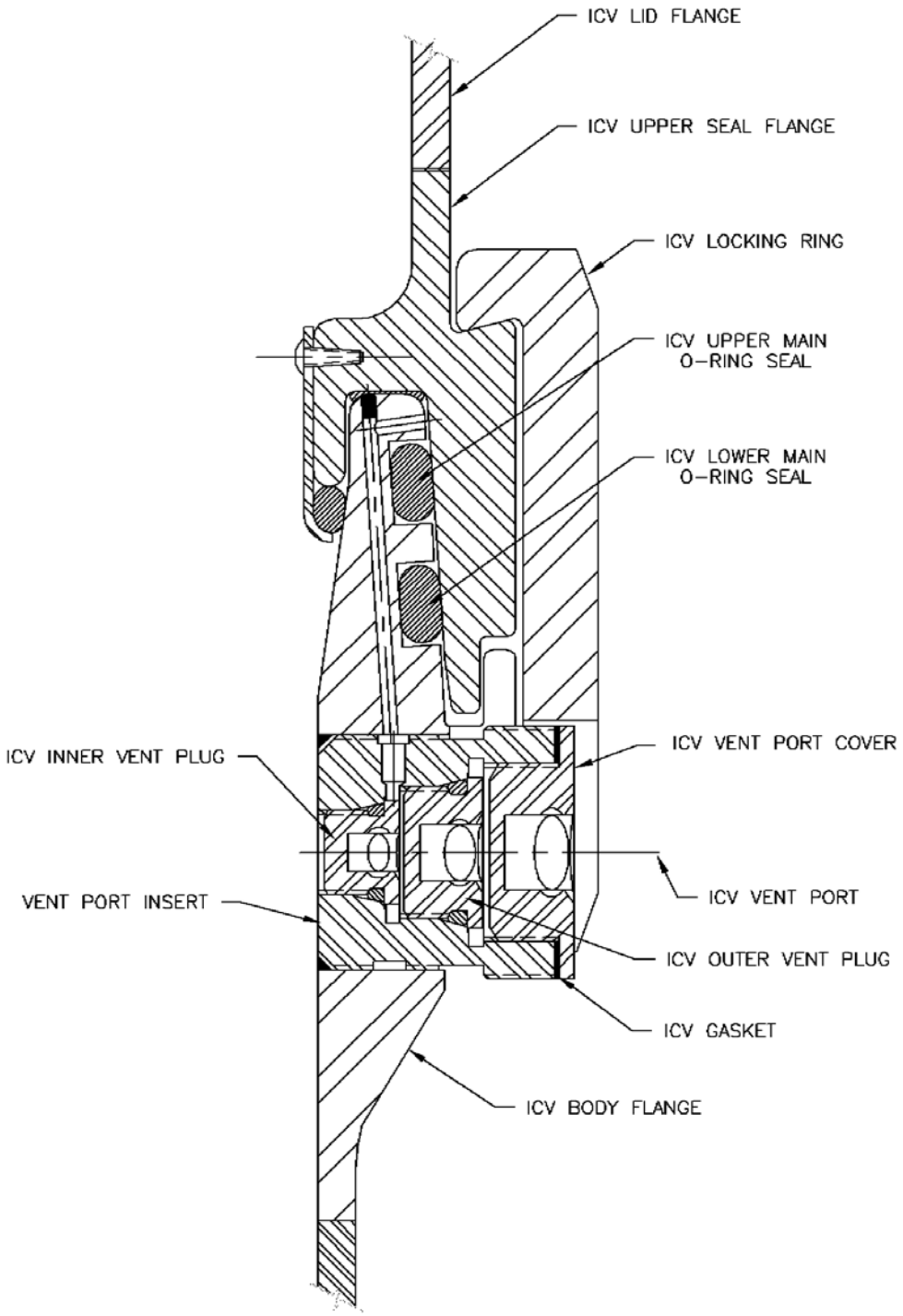

FIGURE 3-9 ICV Vent Port

Working Copy

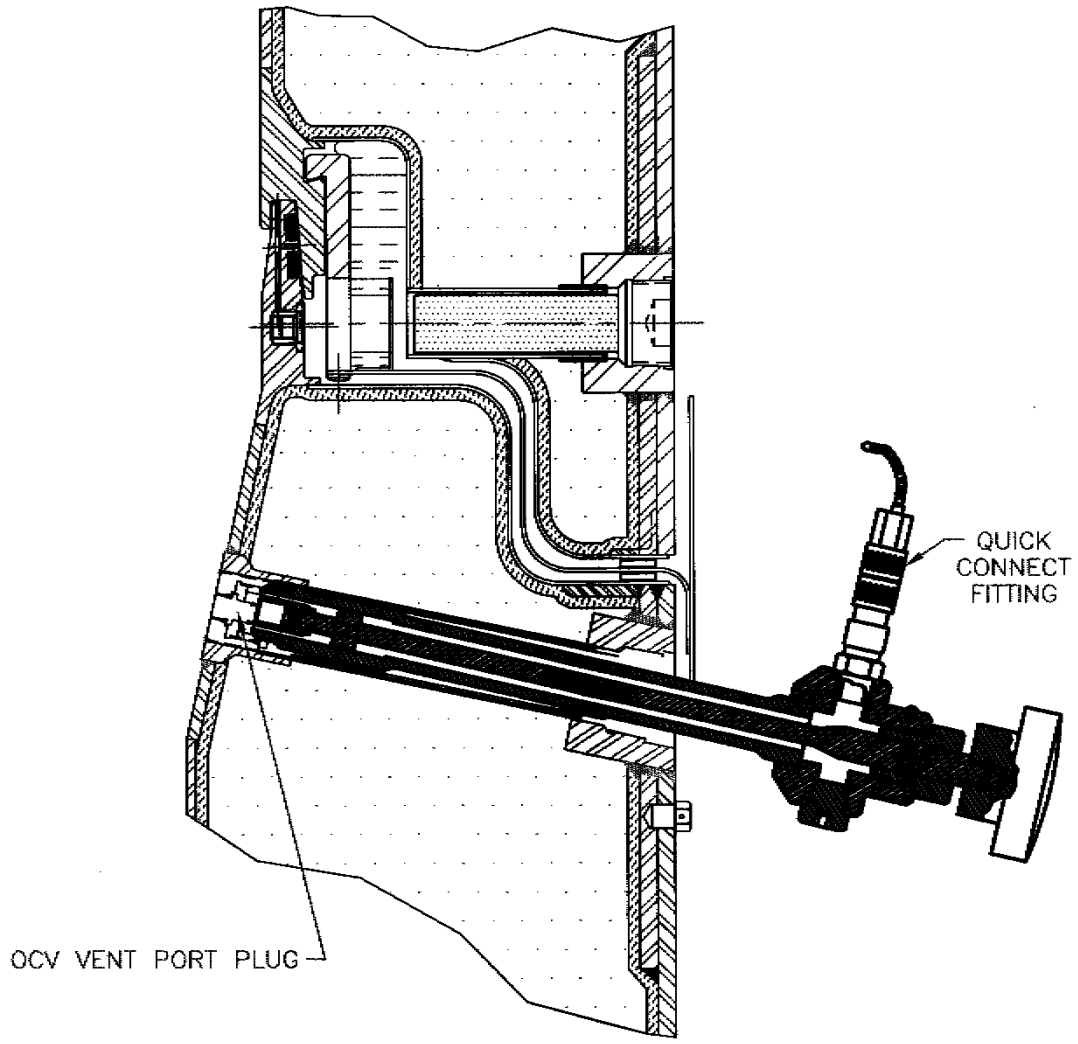

FIGURE 3-10 OCV Vent Port Tool

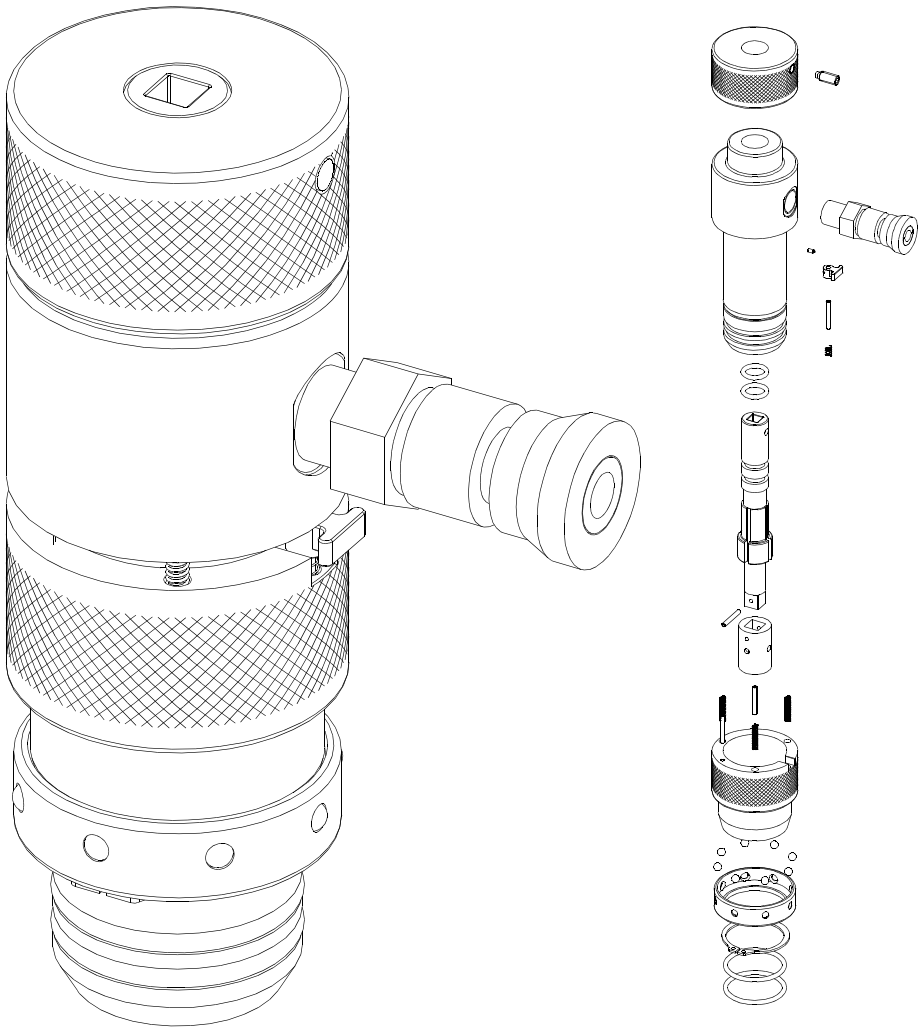

FIGURE 3-11 72-B OC/IV Test Port Tool

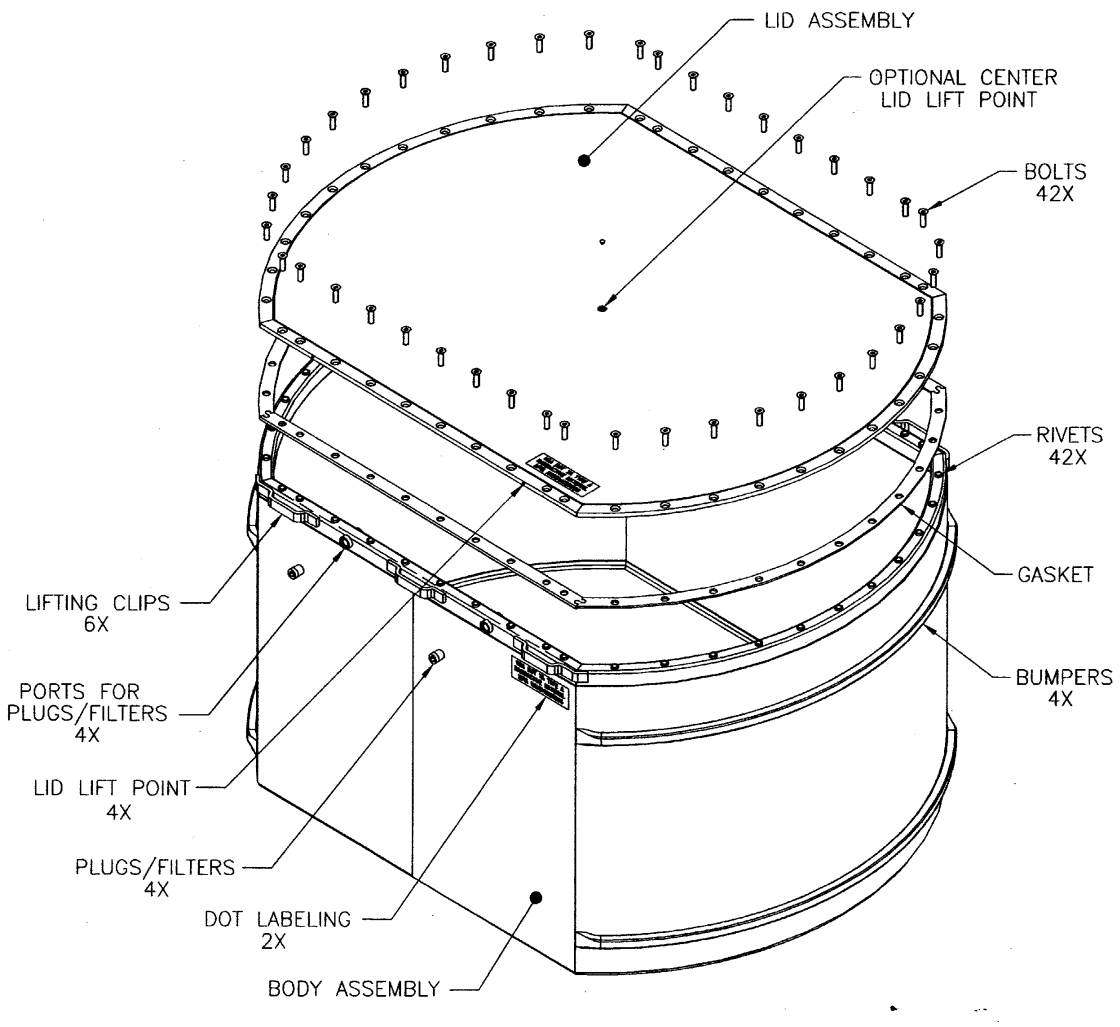

FIGURE 3-12 Standard Waste Box

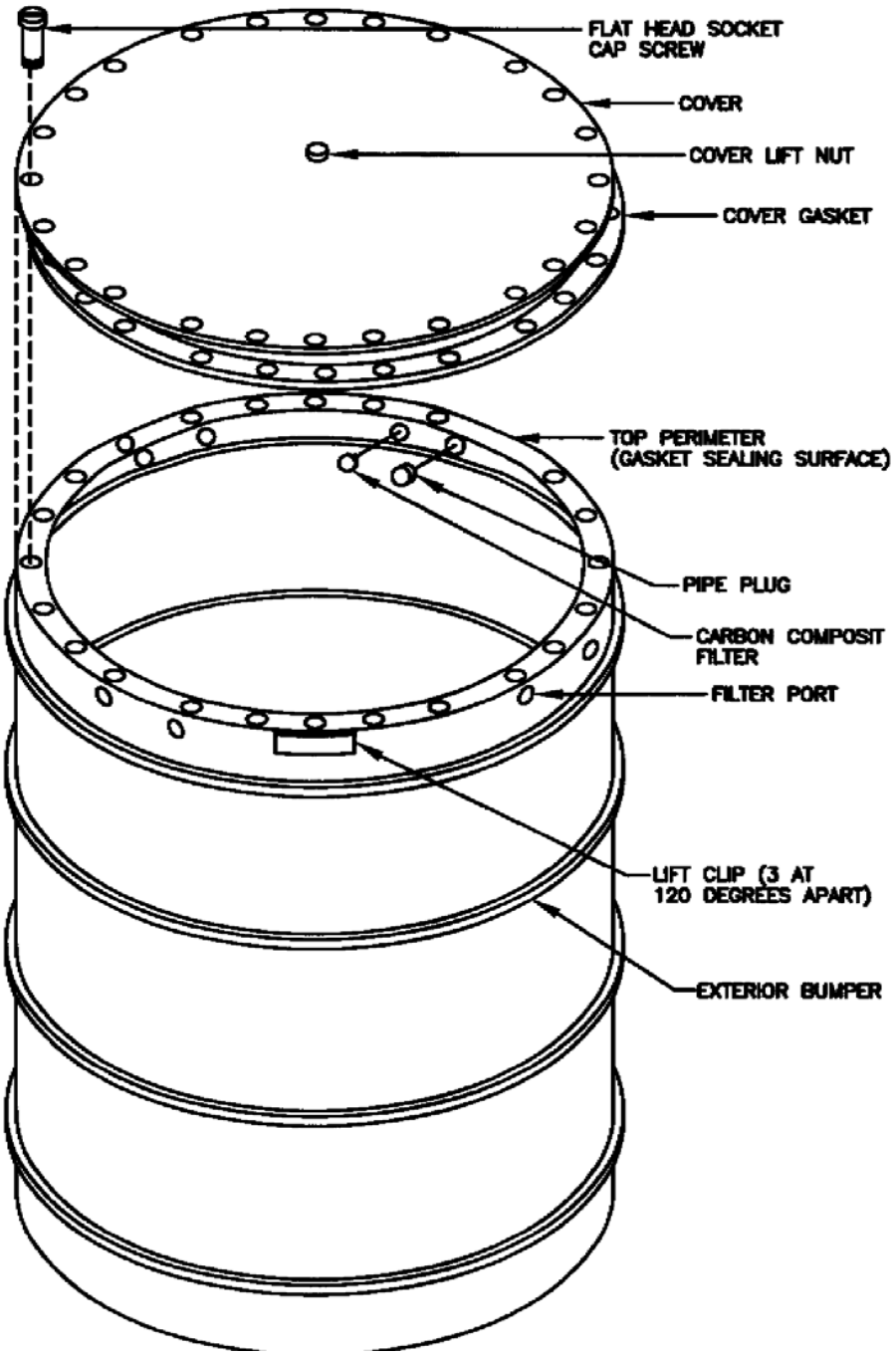

FIGURE 3-13 Ten Drum Overpack

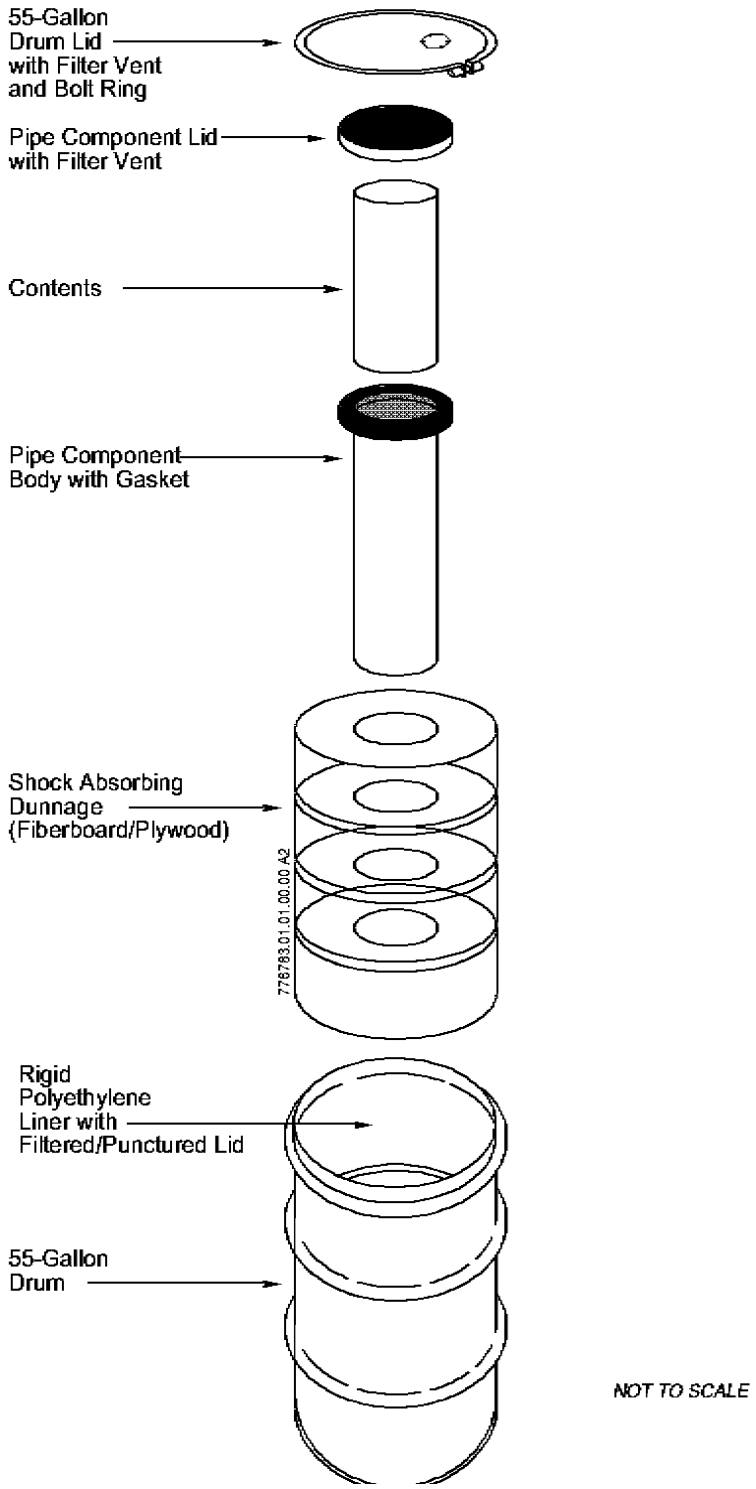

FIGURE 3-14 Pipe Overpack

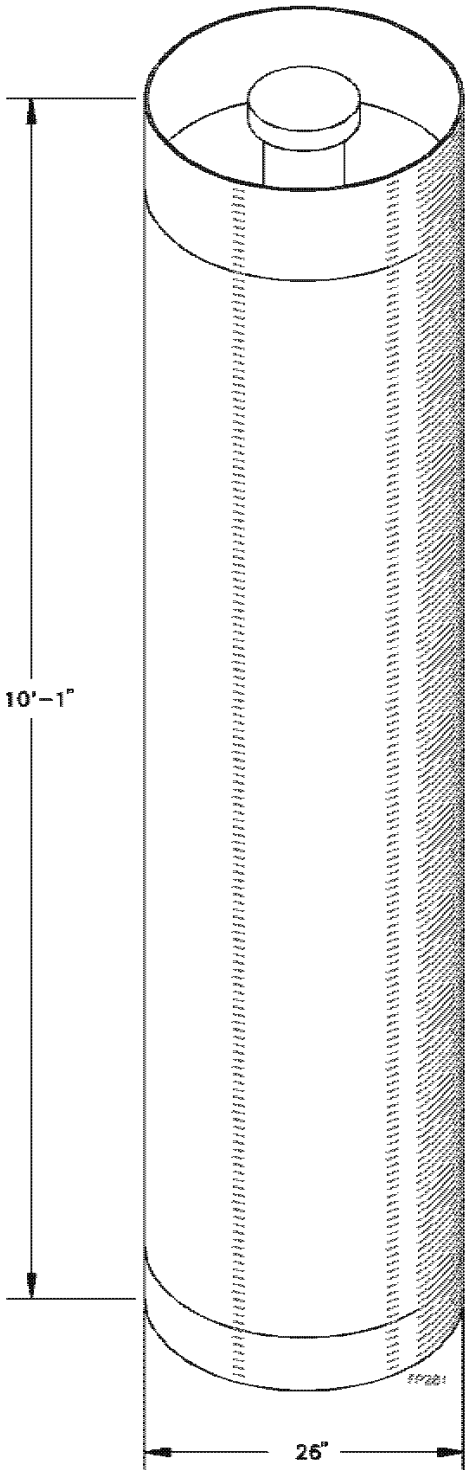

FIGURE 3-15 RH Canister

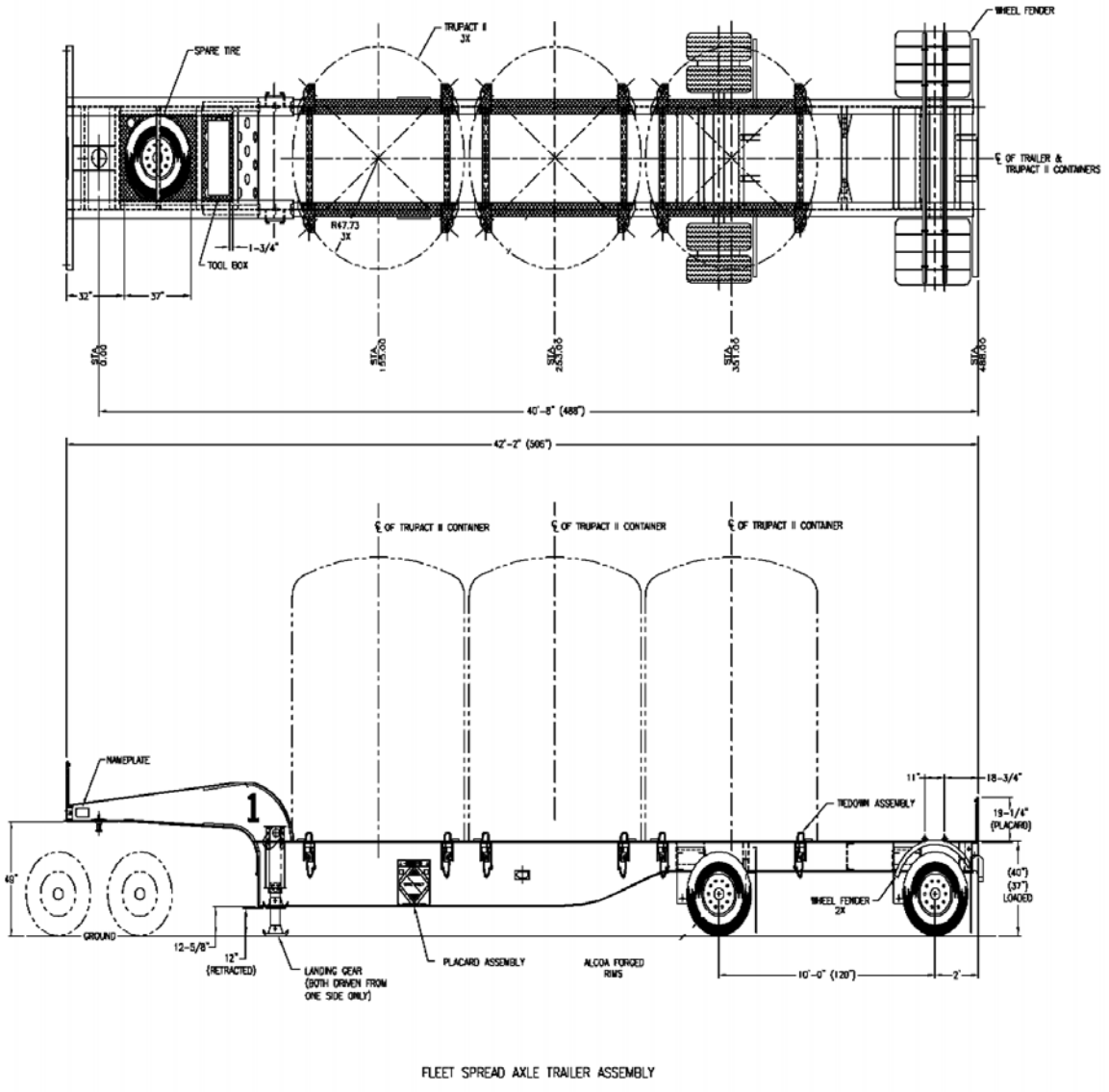

FIGURE 3-16 CH Trailer

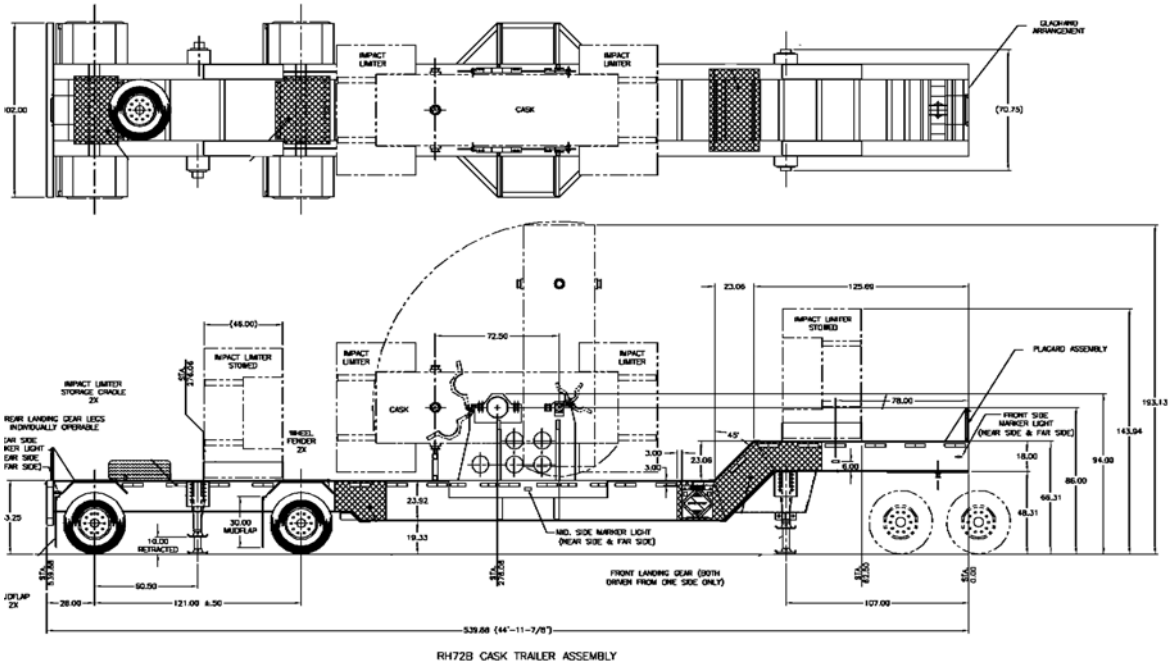

FIGURE 3-17 RH 72-B Trailer

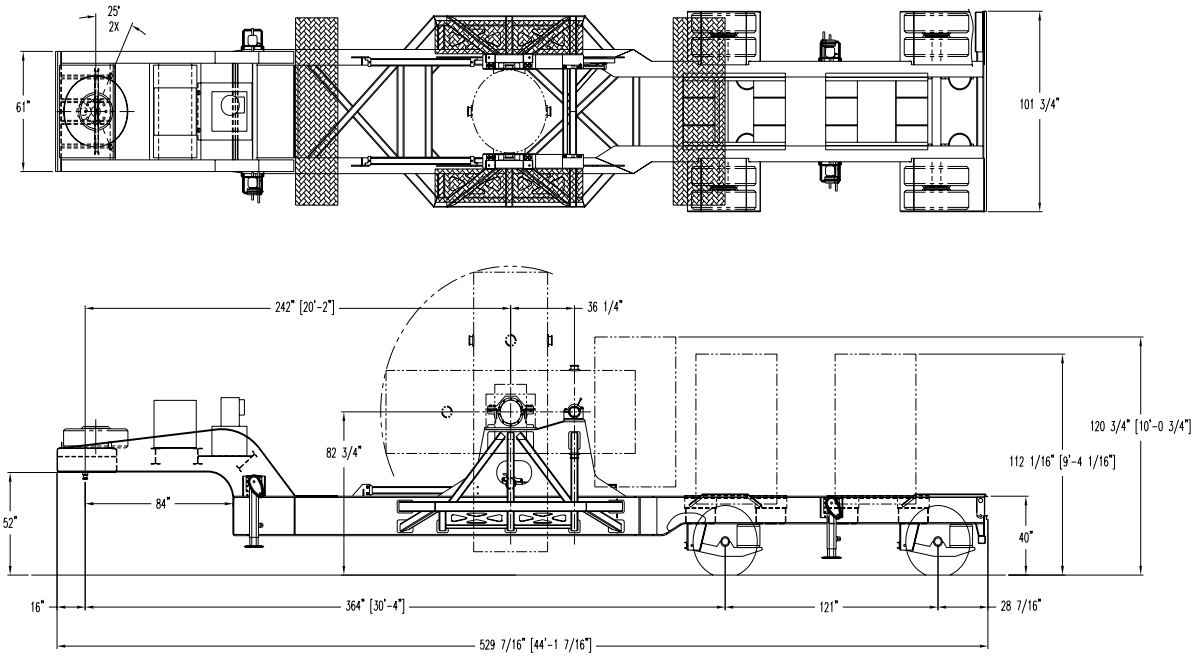

FIGURE 3-18 RH 72-B Cask Uprighting Trailer

4.0 OPERATION

4.1 Contact-Handled TRU Waste Packaging (PT01)

The TRUPACT-II and HalfPACT seal test ports for the OCV and ICV provide access to the volume between the two (2) main O-ring seals that exist between the lid and body (upper and lower, respectively) seal flanges. The seal test ports and vent ports are used to demonstrate the leaktightness of the seals and to verify proper assembly of the packaging prior to shipment. The vent ports are used during loading and unloading to facilitate lid installation and removal, and to allow blowdown of internal vacuum or pressure prior to opening a loaded package. The vent ports allow a helium atmosphere to be introduced for the purpose of conducting leakage rate tests for OCV/ICV main O-ring seals and OCV/ICV vent port plug seals.

To install a lid, the vent port is opened and lid placed on the body to initiate compression of the O-rings. However, in order that the locking ring can be freely rotated to the locked position, the O-ring seals must be more fully compressed. This is accomplished by using the vent port to pull a partial vacuum within the containment vessel cavity thus pulling the lid onto the body, allowing the locking ring to be rotated. At the receiving end of shipment, this same vent port is used to relieve any vacuum or pressure buildup that may have occurred during shipment.

Lifting features are included to lift either vessel or their component parts. The three (3) sets of lift pins, lift straps and associated doubler plates used in the OCA lid are sized to lift the lid of the OCA only. They are not intended to lift a loaded package or empty OCA. A loaded package or any portion thereof can be lifted via the pair of forklift pockets that exist at the base of the OCA. An overhead crane can also be used to lift the loaded package but will require accessing the forklift pockets.

Lifting the ICV is via the three (3) lift pockets that extend into the lid dished head. These lift pockets with their associated lift pins and the adjacent doubler plates are sized so that the lid itself or and empty ICV can be lifted by an overhead crane. A loaded ICV must be fully supported by the OCA body and lifted via the OCA forklift pockets.

4.2 Remote-Handled TRU Waste Packaging (PT02)

4.2.1 72-B

The OC lid has a seal test port and a combination vent/sampling port. The seal test port accesses the volume between the two (2) O-ring seals on the OC lid, thereby verifying assembly prior to shipping the loaded package. The IV lid has a seal test port, a combination vent/sampling port, and a helium backfill port. The seal test port accesses the volume between the upper and

middle (containment) O-ring seals on the IV lid, thereby verifying assembly prior to shipping the loaded package. The helium backfill port accesses the volume between the lower and middle (containment) O-ring seals on the IV lid, thereby allowing a helium atmosphere to be introduced below the containment O-ring seal for the purpose of conducting leakage rate tests. For both the IV and OC lids, the vent port is opened at the loading end of shipment for ease of lid installation, and is used as a sampling port at the receiving end of shipment to determine contamination levels and to equalize pressure. Air fills all void spaces within the packaging for normal conditions of transport.

The cask is designed so that it may be rotated, after removing the impact limiters, to a vertical orientation and secured in place for loading and unloading operations, while still on the trailer. In order to rotate the cask, the impact limiters must first be removed.

Both the OC and IV are fitted with four point eyebolt holes and a pintle receptacle, in which a pintle can be installed. The lids can be lifted with standard eyebolts and four point rigging. The lid can also be lifted using the pintle grapple that is used for handling the canister.

The IV lids also incorporate use of captured, spring-loaded closure bolts and stepped O-ring sealing surfaces to improve installation efficiency in remote environments. Captured closure bolts aid installation and removal in remote environments. Stepped sealing surfaces help minimize potential for lid binding and help reduce lid installation forces required.

To improve remote and non-remote lid installation operations, there are tapered lid alignment guide pins on the OC and IV to assist in lid rotational alignment for bolt installation.

4.2.2 10-160B

Both the Primary Lid and the Secondary Lids have seal test ports. For each lid, the respective seal test port accesses the volume between the two (2) O-ring face type seals on the lid. This provides a means to verify assembly prior to shipping the loaded package. The pre-shipment leakage rate test is by the pressure drop method for the Primary Lid or for the Secondary Lid.

Either lid is installed at the loading end of shipment or removed at the receiving end of shipment by de-tensioning and removing the bolts that secure the lid. Air fills all void spaces within the packaging for normal conditions of transport. Nitrogen can also be used to inert the payload area when required by the certificate of conformance.

The cask is designed so that it may be either be lifted off of the trailer or loaded/unloaded on the trailer.

Either the Secondary Lid by itself or the Primary Lid with the Secondary Lid are lifting by the three lift lugs on the Secondary Lid. This method is used to remove lids from the cask or for other lid handling.

The Primary Lid is secured to the cask body by 24 bolts. The Secondary Lid is secured to the Primary Lid by 12 bolts. Either lid provides shielding while the bolts are being installed. To reduce exposure when installing either lid, tapered lid alignment guide pins are provided.

4.3 Payload Container (PT03)

Each payload container will be operated in accordance with their applicable Specification or Operations Manual. All payload configurations must comply with the CH-TRAMPAC.

4.4 Transport Trailer (PT04)

Pre-operational checks will be performed prior to using the trailer. This includes a review of the previous inspection report plus the standard equipment checks such as brakes, lights and reflectors, suspension, landing gear, bearing lubrication levels, tires and wheels, and coupling devices. In addition, a visual inspection of structural members of the chassis, kingpin, and tiedown attachment points for signs of weld cracks, corroded metal, deflections, deformations, or other unusual conditions should be performed prior to use. Any signs of low oil level, excessive wear, damage, and/or malfunction will be corrected prior to placing the unit in service.

At the completion of each day, a post-trip inspection, consisting of the items above, will be performed.

There are two types of tiedowns used on the CH trailers, cam-operated and screwjack. The cam-operated tiedowns are adjustable length U-bolts that interface with, and clamp down on corresponding lugs on the packages. When the cam handle is in the "up" position, the U-bolt can be rotated outward and then engaged onto the tiedown lug of the packaging. Once the U-bolt is engaged on the tiedown lug of the packaging, the cam handle is rotated to the "down" position and locked in position with a spring pin, padlock, or other appropriate securing device. The adjusting nuts are tightened as required.

The screwjack tiedown utilizes two (2) ½-in. SAE grade 8 bolts passing through a stainless steel bracket which attaches over the tiedown lug of the packaging. The bolts pass through the top block of the screwjack assembly, and are threaded into the stationary bottom block of the screwjack assembly. The top and bottom blocks are connected by a series of moving links which allow the top block to move freely up or down on the bolts. The distance between the top and bottom blocks is controlled by the ACME bolt. Once the

tiedown is engaged on the tiedown lug of the packaging and the top block contacts the trailer tiedown plate, the ACME bolt is adjusted to move the top block away from the bottom block, which compresses the spring washers located in the top block to the proper tension. Once adjusted, the ACME bolt is locked into position with a locking plate.

The RH 72-B trailer tiedowns on both the static and rotating cask trailers clamp over the main RH-TRU 72-B Cask trunions (2) and are bolted with 4 bolts each. Two additional clamps are around the handling trunions, which are bolted with 2 bolts each. All bolts are torqued as required.

The 10-160B trailer tiedown assemblies are heavy duty ratchet binders, or turnbuckles with yoke type ends. The yoke on the trailer end of each tiedown straddles the trailer tiedown block, and is secured by the clevis pin. The yoke on the cask end of each tiedown is fastened to a shackle which is attached to, and remains with the cask. The tiedown pairs on both the fore and aft sides of the package are arranged such that they cross over each other. In addition to the tiedowns, the trailer is equipped with heavily reinforced steel plates extending vertically from the trailer deck to prevent lateral and longitudinal movement of the package.