Working Copy

SDD: CM00-PC00

Revision Number: 14

Revision Date: March 02, 2011

U.S. DEPARTMENT OF ENERGY

WASTE ISOLATION PILOT PLANT
PLANT MONITORING AND COMMUNICATIONS
SYSTEM DESIGN DESCRIPTION

SDD CM00-PC00

Prepared by

Washington TRU Solutions LLC
Carlsbad, New Mexico

For

U.S. Department of Energy

Cognizant Engineer: Clem Quintana (PC00) 02/24/11
Approved for Use Date

Cognizant Manager: Stan Patchet 03/01/11
Approved for Use Date

Working Copy

TABLE OF CONTENTS

TITLE PAGE . . . . . -I-

SUBSYSTEM APPROVAL . . . . . -ii-

CHANGE HISTORY . . . . . -iii-

SUMMARY S-1

System/Subsystem Part, Chapter

CM00-PC00 General Design and Performance Requirements . . . . . Chapter G

CM01 Central Monitoring System (CMS) . . . . . Part I, Chapter I

CM02 Central Monitoring Room (CMR) . . . . . Part I, Chapter II

CM03 WIPP Waste Information System . . . . . Part I, Chapter III

CM05 Waste Handling Barcode Reader System . . . . . Part I, Chapter IV

PC01 Dial Phones . . . . . Part II, Chapter I

PC02 Mine Pager Phones . . . . . Part II, Chapter II

PC03 Plant PA and Alarm Systems . . . . . Part II, Chapter III

PC04 Radio and Other . . . . . Part II, Chapter IV

PC05 Shared Computing Resources . . . . . Part II, Chapter V

PC06 Emergency Operations Center (EOC) . . . . . Part II, Chapter VI

Appendices . . . . . Part I & II, Appendices

Working Copy

Plant Monitoring and Communications (CM00)
System Design Description (SDD)

CHANGE HISTORY

REV. NO.	REV. DATE	PAGES/SECTIONS AFFECTED	APPROVED BY
0	9/91	Sections 1.0, 2.0, 3.0, & 3.3	ECP 1-CM91-60 ECO No. 5790
1	9/92	Revised Sections 1.0, 2.0, 3.3, & App Added Sections 3.0, 4.0, 5.0, 6.0, 7.0	ECP 1-CM91-60 ECO No. 6385
2	5/96	All Sections	ECP 1-CM93-030 ECO No. 6716 ECP 2-CM93-118 ECO No. 6893 ECP 2-CM94-131 ECO No. 7583 ECP 2-GC94-116 ECP 1-FP95-044 ECO No. 7983 ECO No. 8165
2	7/97	Page(s) Section(s) 3-41 3.3.1.3 3-42 3.3.1.5 3-99 3.7.2.2 3-57,58 3.5.1 2-13 2.3.3.2.5 3-45,46,47 3.3.4.1 through 3.3.7.10	ECP 1-RM96-021 ECO No. 8460 ECO No. 8492 ECP 1-PC97-035 ECO No. 8604
3	6/98	All Sections	ECP 1-FP96-028 ECO No. 8218 ECP 2-GC94-116 ECO No. 8620 ECO No. 8805 ECP 1-GP97-109 ECO No. 8864 ECP 1-CM97-041 ECO No. 8887 ECP 1-GP97-111 ECO No. 8907 ECP 2-CM97-101 ECO No. 8908 ECP 1-PC97-035 ECO No. 8925 ECP 1-VU96-055 ECO No. 9009 ECO No. 9252

Working Copy

REV. NO.	REV. DATE	PAGES/SECTIONS AFFECTED	APPROVED BY
4	10/01	All sections format changes Section I-I Section I-III Section II-III Section II-IV Table CM-I-I-4 Section II-I Section II-V Section II-IV Figure PC-II-IV-2	 ECO No. 9900 ECO No. 9463 ECO No. 9630 ECO No. 9807 ECO No. 9882 ECO No. 9526 ECO No. 9782 ECO No. 9490 ECO No. 9664 ECO No. 10329 ECO No. 9776
5	02/02	Section I-I	ECO No. 10288
6	6/03	Removal of Part 1, Chapter IV Subsystem CM04, TRANSCOM from SDD. Removal of Sub-system Approval Page Deleted reference to TRANSCOM: S-1, G-1, I-II-2, I-II-6, I-II-7, I-II-13, I-IV-10, APP-4, APP-6, APP-7 Removal of TRANSCOM information, G-2, 2.19. Removal of TRANSCOM information on figure CM-I-II.	ECO No. 10472
7	9/03	Removal of reference to obsolete Emergency Operations Center (EOC) communication equipment in Sections II-I, II-IV, II-VI, and the Appendix.	ECO 10317
8	01/06	DSA changes	ECO 11320
9	04/06	Changes to CM01, TRANSCOM	ECO 10755
10	06/07	Changes to Step 3.2.8 and 5.1.2	ECO 11370
11	08/07	Changes to CM01, TRANSCOM. Creates the CM05 system which will include the barcode readers to be installed in the CH Bay and in the U/G, also include the ethernet infrastructure to allow the barcode readers to connect to the WIPP intranet for communications with the WWIS.	ECO 11660

REV. NO.	REV. DATE	PAGES/SECTIONS AFFECTED	APPROVED BY
12	10/09	Revised CM01: For Operational Integrity • Section 2.4.2 Design Requirements with revised Functional Classification. • Removed Section 3.4.2 Specific Configuration and Location of CMS Computers. • Removed Specific Numbering for LPUs relating to Shift-To-Filtration. • Revised Section 3.5.6.1 amount of Printers required on the CMS network. • Revised Figure CM-1-1-1 CMS Functional Block Diagram. Revised CM03: For Operational Integrity. • Revised Section 2.1 - 2.2 Updated connectivity methods. • Revised Section 3.1.1 Update deprecated network description. • Revised Section 3.2.1.2 Update backup server facility nomenclature. • Revised Section 6.3.1 Added network loss contingency. • Revised Section 7.1 Updated patch process. Revised CM05: For Operational Integrity. • Revised Section 2.1.2, Removed storage capacity requirement for WWIS. • Revised Section 2.10.1, Removed Barcode Readers requirements are the same as WWIS software. requirements. • Revised Section 3.2.1.1, Removed WWIS local database for barcode reader synchronization. • Removed Section 3.4.3, Local servers at WIPP with a portion of the WWIS database. • Revised Section 3.5.4 Hardware requirements for WWIS. • Revised CM03 Function as a web based application.	ECO 12074 (CM03) and addendum (CM01 and CM05)

Working Copy

REV. NO.	REV. DATE	PAGES/SECTIONS AFFECTED	APPROVED BY
13	4/10	Changed WWIS to WDS in Summary (S-1) Changed WWIS to WDS in Footnote (G-1) Part I, Chapter III • Change WWIS to system for summary, 1.0, 2.1.1, 2.1.2, 2.1.3, 2.1.4, 2.1.5, 2.1.6, 2.1.7, 2.3, 2.4.1, 2.4.2, 2.4.3, 2.6.1, 2.6.2, 2.7, 2.8, 2.9.1, 2.9.2, 2.10.1, 2.10.2, 2.11, 2.12.1, 2.12.2, 3.1.1, 3.1.2, 3.1.3, 3.2.1, 3.2.3, 3.3, 3.4, 3.5, 3.6, 3.7.1, 3.7.2, 4.1.1.2, 4.1.1.3, 4.1.2.5, 4.2.1, 4.2.2, 4.3.1, 4.4.1.1, 4.4.2.1, 4.4.2.3, 6.1.1, 6.2.1, 6.3.1, 7.1, 7.2, 7.3, 7.4.1 • Add SID to 2.1.7 • Add physical description of operating configuration 2.3 • Add location of network diagrams 2.4.4 • Update WWIS to WDS 3.3, 4.2.2, 6.3.1 • Update startup procedure 4.1.1.1, 4.1.2.1, 4.1.2.2, 4.1.2.4 • Change WWIS to WWIS/WDS for summary (I-III-1) Part I, Chapter IV • Update WWIS to system for 1.1,1.2,3.2.2.1 (third bullet), 3.7.2 (function description) • Change WWIS to WDS for 3.2.2.1 (fourth bullet) • Change WWIS to CM03 2.6.1 • Add RCRA reference in 1.1. • Change System Title of WWIS to WWIS/WDS 2.9.1, 2.9.2 • Change WWIS to WWIS/WDS 2.10.1 • Change WWIS to WDS 3.3.3 • Change WWIS to WWIS/WDS 3.7.1, 3.7.2 (system title description) • Add web-based in the function description for 3.7	ECO 12445
14	03/11	Modify information Part II-IV: • Step 3.1 • Step 3.2.7	ECO 12779

Working Copy

SUMMARY
PLANT MONITORING AND COMMUNICATIONS

The Plant Monitoring and Communications SDD (SDD CM00-PC00) is presented in two parts which are (a) Plant Monitoring, Part I, and (b) Plant Communications, Part II. The CM00-PC00 subsystems are as follows:

Part I Plant Monitoring (CM00)

- Central Monitoring System (CMS) (CM01)
- Central Monitoring Room (CMR) (CM02)
- Waste Data System (WDS) (CM03)
- Waste Handling Barcode Reader System (CM05)

Part II Plant Communications System (PC00)

- Dial Phones (PC01)
- Mine Pager Phones (PC02)
- Plant Public Address (PA) and Alarm Systems (PC03)
- Radio and Others (PC04)
- Shared Computing Resources (PC05)
- Emergency Operations Center (EOC) (PC06)

Working Copy

Chapter G

Subsystem CM00-PC00, General Design and Performance Requirements

TABLE OF CONTENTS

1.0 PRIMARY FUNCTIONS G-1

2.0 DESIGN REQUIREMENTS G-2

2.1 General G-2

2.2 Subsystem General Requirements G-2

2.3 Operational Requirements G-2

2.4 Structural G-2

2.5 General Arrangement and Essential Features G-3

2.6 Maintenance G-3

2.7 In-Service Inspection G-3

2.8 Instrumentation and Control G-3

2.9 Interfacing Systems G-3

2.10 Quality Assurance G-4

2.11 Codes and Standards G-4

2.12 Reliability Assurance G-4

3.0 DESIGN DESCRIPTION G-4

3.1 Summary G-4

3.2 Detailed System Description G-4

3.3 System Performance Characteristics G-4

3.4 System Arrangement G-5

3.5 Component Design Description G-5

3.6 Instrumentation and Control G-5

Working Copy

3.7 System Interfaces G-5

4.0 OPERATIONS G-5

5.0 SYSTEM LIMITATIONS, SETPOINTS, AND PRECAUTIONS G-5

6.0 OFF-NORMAL EVENTS AND RECOVERY G-5

7.0 MAINTENANCE G-6

7.1 Maintenance Approach G-6

Working Copy

Chapter G

Subsystem CM00-PC00, General Design and Performance Requirements

1.0 PRIMARY FUNCTIONS

The primary function of Plant Monitoring and Communications is to provide centralized, integrated locations for the following activities:

- Collecting, processing, monitoring and storing site parameters and information from signals provided by fire detection and alarm, process, radiation, environmental and other systems.
- Surface, underground, and off-site communications
- Operations assistance
- Engineering, scientific, and administrative data processing
- Emergency operations management

The primary functions for each subsystem are presented in the Parts/Chapters of this two part SDD (Part I CM00 and Part II PC00) and are identified in Footnotes G-1 and G-2.

Footnote G-1

Plant Monitoring CM00 (Part I)

- Chapter I Central Monitoring System (CM01)
- Chapter II Central Monitoring Room (CM02)
- Chapter III Waste Data System (WDS) (CM03)
- Chapter IV Waste Handling Barcode Reader System (CM05)

Footnote G-2

Plant Communications PC00 (Part II)

- Chapter I Dial Phones (PC01)
- Chapter II Mine Pager Phones (PC02)
- Chapter III Plant PA and Alarm Systems (PC03)
- Chapter IV Radio and Other (PC04)
- Chapter V Shared Computing Resources, WIPPNET (PC05)
- Chapter VI Emergency Operations Center, EOC (PC06)

Working Copy

2.0 DESIGN REQUIREMENTS

Refer to Section 2.0 for the Parts/Chapters listed in Footnotes G-1 and G-2, for the subsystem specific design requirements.

2.1 General

Refer to Section 2.1 for the Parts/Chapters listed in Footnotes G-1 and G-2, for the subsystem specific general design requirements.

Plant Monitoring and Communications shall provide central locations and the systems and functions required to accomplish the following:

2.1.1 Monitor site parameters and alarms.

2.1.2 Collect and store site data.

2.1.3 Receive and process notification of occurrences.

2.1.4 Provide surface and off-site communications.

2.1.5 Provide communications with the underground.

2.1.6 Provide radio communications.

2.1.7 Provide engineering, scientific and administrative data processing.

2.1.8 Direct emergency operations.

2.2 Subsystem General Requirements

Refer to Section 2.2 for the Parts/Chapters listed in Footnotes G-1 and G-2, for the subsystem specific general requirements.

2.3 Operational Requirements

There are no general operational requirements.

Refer to Section 2.3 for the Parts/Chapters listed in Footnotes G-1 and G-2, for the subsystem specific general operational requirements.

2.4 Structural

2.4.1 There are no structural requirements for the Plant Monitoring and Communications Equipment.

Working Copy

2.5 General Arrangement and Essential Features

Refer to Section 2.5 for the Parts/Chapters listed in Footnotes G-1 and G-2, for the subsystem specific general arrangement and essential features.

2.5.1 Grounding

Equipment cabinets shall be connected to the plant ground grid, either directly or through the facility ground grid.

Equipment installations shall meet all applicable vendor specifications for power supply variations and environmental variations.

Equipment cabling shall not be co-located with power system cabling with the exception of the public address system vendor supplied specially designed cables.

Equipment located underground shall be protected from the dusty and possibly corrosive atmosphere as identified by vendor requirements.

2.6 Maintenance

Refer to Section 2.6 for the Parts/Chapter listed in Footnotes G-1 and G-2, for the subsystem specific maintenance requirements.

2.7 In-Service Inspection

Refer to Section 2.7 for the Parts/Chapters listed in Footnotes G-1 and G-2, for the subsystem specific general in-service inspections.

2.8 Instrumentation and Control

Refer to Section 2.8 for the Parts/Chapter listed in Footnotes G-1 and G-2, for the subsystem specific general instrumentation and control requirements.

2.9 Interfacing Systems

2.9.1 Primary interfaces are requirements placed on other systems by Plant Monitoring and Communications.

2.9.2 Secondary interfaces are requirements placed on Plant Monitoring and Communications by other systems.

Refer to Section 2.9 for the Parts/Chapters listed in Footnotes G-1 and G-2, for the subsystem specific interfacing requirements.

Working Copy

2.10 Quality Assurance

2.10.1 To assure that the required quality is achieved for all aspects and activities of the WIPP, a comprehensive quality assurance (QA) program shall be implemented and controlled in conformance with 10CFR830.120, ASME NQA-1, guidance documents NQA-2, Subpart 2.7, as set forth in the U.S. Department of Energy Carlsbad Area Office (DOE/CAO) *Quality Assurance Program Description*, CAO-94-1012.

2.10.2 Design specifications, equipment specifications and drawings for the system, its components and equipment, and services related thereto shall contain QA program requirements appropriate to the item or scope of work being defined or specified. These specifications shall also define QA practices such as inspections, examinations, and tests appropriate to the specified item or service.

2.10.3 A graded approach shall be used. Application of the appropriate QA requirements shall be determined in a manner consistent with the relative associated probability and consequences of risk and functional importance of the item or service involved, as represented by the Design Class of the equipment delineated in Section 2.4 above.

2.11 Codes and Standards

Refer to Section 2.11 for the Parts/Chapters listed in Footnotes G-1 and G-2, for the subsystem specific codes and standards general primary functions.

2.12 Reliability Assurance

Refer to Section 2.12 for the Parts/Chapter listed in Footnote G-1 and G-2, for the subsystem specific reliability requirements.

3.0 DESIGN DESCRIPTION

3.1 Summary

Refer to Section 3.1 for the Parts/Chapters listed in Footnotes G-1 and G-2, for the subsystem specific summary design description.

3.2 Detailed System Description

Refer to Section 3.2 for the Parts/Chapters listed in Footnotes G-1 and G-2, for the subsystem specific detailed system description.

3.3 System Performance Characteristics

Refer to Section 3.3 for the Parts/Chapters listed in Footnotes G-1 and G-2, for the subsystem specific performance characteristics.

Working Copy

3.4 System Arrangement

Refer to Section 3.4 for the Parts/Chapters listed in Footnotes G-1 and G-2, for the subsystem specific arrangements.

3.5 Component Design Description

Refer to Section 3.5 for the Parts/Chapters listed in Footnotes G-1 and G-2, for the subsystem specific component design description.

3.6 Instrumentation and Control

Refer to Section 3.6 for the Parts/Chapters listed in Footnotes G-1 and G-2, for the subsystem specific instrumentation and control requirements.

3.7 System Interfaces

Refer to Section 3.7 for the Parts/Chapters listed in Footnotes G-1 and G-2, for the subsystem specific interfaces.

4.0 OPERATIONS

Refer to Section 4.0 for the Parts/Chapters listed in Footnotes G-1 and G-2, for the subsystem specific operations requirements.

5.0 SYSTEM LIMITATIONS, SETPOINTS, AND PRECAUTIONS

Refer to Section 5.0 for the Parts/Chapters listed in Footnotes G-1 and G-2, for the subsystem specific limitations, setpoints, and precautions.

6.0 OFF-NORMAL EVENTS AND RECOVERY

Many design features are incorporated in the system designs to mitigate the consequences of abnormal conditions caused by off-normal events such as loss of power and component failures.

Refer to Section 6.0 for the Parts/Chapters listed in Footnotes G-1 and G-2, for the subsystem specific off-normal events and recovery sequences.

Working Copy

7.0 MAINTENANCE

7.1 Maintenance Approach

A graded approach to maintenance shall be used. Maintenance activities shall be performed with no significant reduction in operating efficiency. The following order of precedence shall be considered:

- Perform all maintenance on the Plant Monitoring and Communications system using "contact maintenance" techniques. In the event that a failed unit is contaminated, the method of repair should minimize the production of radioactive waste and the impact on operations and employ ALARA concepts.

- Repair, service, and adjust in place. This approach provides for maintenance without shutdown of the system or component.

- Replace the component with a spare unit.

The following guidelines apply to all subsystems covered by this SDD:

- The periodicity of operational checks and routine maintenance operations will depend on whether the equipment is in use. Except where specified otherwise, equipment that is not in use, need only be checked for operability before it is to be put in service. Equipment needed for emergency but not in daily use is considered to be "in use."

- All maintenance performed on the components of the Plant Monitoring and Communications system shall follow the requirements of DOE Orders and DOE Radio Procedures Guide. When maintenance is performed upon a component, proper alignment, clearances, and performance and other checks and tests shall be made and verified to assure the component is restored to service in acceptable condition. After corrective maintenance, a retest as required shall be performed to ensure that the system has been restored in compliance with its design operating capability. The degree of retest shall depend on the maintenance performed, and can range from no retest to a complete system checkout.

If parts have been replaced during maintenance, the component or system shall undergo the nondestructive and functional tests required to restore the component or system to its original capability and operability. After maintenance, the components and system shall be restored to the design operating capability that existed prior to the indication that maintenance was required.

- Whenever a unit fails a functional check or a test, it shall be repaired before being restored to service.

Working Copy

Refer to Section 7.0 for the Parts/Chapters listed in Footnotes G-1 and G-2, for the subsystem specific maintenance requirements.

Working Copy

Part I, Chapter I

Subsystem CM01, Central Monitoring System (CMS)

TABLE OF CONTENTS

1.0 PRIMARY FUNCTIONS I-I-1

2.0 DESIGN REQUIREMENTS I-I-1

2.1 General I-I-1

2.2 Subsystem General Requirements I-I-5

2.3 Operational Requirements I-I-5

2.4 Structural I-I-6

2.5 General Arrangement and Essential Features I-I-6

2.6 Maintenance I-I-7

2.7 In-Service Inspection I-I-7

2.8 Instrumentation and Control I-I-8

2.9 Interfacing Systems I-I-8

2.10 Quality Assurance I-I-9

2.11 Codes and Standards I-I-10

2.12 Reliability Assurance I-I-12

3.0 DESIGN DESCRIPTION I-I-12

3.1 Summary I-I-12

3.2 Detailed System Description I-I-13

3.4 System Arrangement I-I-16

3.5 Component Design Description I-I-16

3.6 Instrumentation and Control I-I-20

3.7 System Interfaces I-I-20

Working Copy

4.0 OPERATIONS I-I-24

5.0 SYSTEM LIMITATIONS, SETPOINTS, and PRECAUTIONS I-I-24

5.1 Limitations I-I-24

5.2 Setpoints I-I-24

5.3 Precautions I-I-24

6.0 OFF-NORMAL EVENTS AND RECOVERY I-I-25

7.0 MAINTENANCE I-I-25

7.1 Maintenance Approach I-I-25

7.2 Corrective Maintenance I-I-25

7.3 Preventive Maintenance I-I-25

7.4 In-Service Inspection I-I-25

Working Copy

LIST OF FIGURES

Figure Page

FIGURE CM-1-1-1 CMS Functional Block Diagram I-I-26

Working Copy

LIST OF TABLES

Table Page

TABLE CM I-I-1 - Primary Interfacing Systems I-I-8

TABLE CM I-I-2 - Secondary Interfacing Systems I-I-9

TABLE CM I-I-3 - Primary Interfacing Systems I-I-22

TABLE CM I-I-4 - Secondary Interfacing Systems I-I-23

TABLE CM I-I-5 - System Alarm Setpoints I-I-24

Working Copy

Chapter I-I

Subsystem CM01, Central Monitoring System (CMS)

1.0 PRIMARY FUNCTIONS

The primary functions of the CMS are as follows:

- Collecting, processing, monitoring and storing site parameters and information from signals provided by fire detection and alarm, process, radiation, environmental and other systems.
- Provide manual and automatic control functions for selected subsystems.
- Check sensor measurements for out-of-limit values.
- Provide indication of alarm conditions.
- Provide storage for trending of selected measurements and calculated parameters.
- Provide CMS point data information to and from the Shared Computing Resources (PC05).
- Operations assistance.

2.0 DESIGN REQUIREMENTS

The functional classifications are defined in the Documented Safety Analysis (DSA) and the General Plant Design Description (GPDD).

2.1 General

2.1.1 The CMS shall be a computer based system providing displays, alarms and control functions.

2.1.2 The CMS shall be interfaced to the Shared Computing Resources (PC05) to allow remote access to CMS data.

2.1.3 The CMS shall display system or component information such as status, setpoint, alarm limit, bar charts, trends and process flow diagrams.

2.1.4 The CMS shall archive operating parameters and alarm points.

Working Copy

2.1.5 The CMS shall have the capability for hardware and software expansion with minimum impact on existing hardware, applications, software and the real-time operating system.

2.1.6 The system software shall include a real-time operating system, data acquisition and scan-alarm routines, supervisory, manual and automatic control routines, color graphics display routines and a library of mathematical and utility routines.

2.1.7 The system shall have the capability to provide hard copy of all measurements and calculated values that are in an invalid or out-of-limit condition. The CMS shall provide formatting of all output data.

2.1.8 System graphics, configuration software, and application programs shall be retained in nonvolatile memory.

2.1.9 The CMS equipment located in radioactive materials areas shall operate at the maximum level of radiation permissible for the design radiation zone in which it is installed.

2.1.10 The CMS shall have a design life of 25 years, with proper upgrading, maintenance and replacement of malfunctioning components. Components which may have a shorter design life, such as seals, lamps, and light-emitting diodes, shall be designed for easy replacement during a normally scheduled maintenance period.

2.1.11 The CMS equipment shall operate within all applicable manufacturers' specifications.

2.1.12 The CMS shall allow within practical limits, the failure and removal of modular units for maintenance without affecting the operation of the remaining system.

2.1.13 Enclosures shall meet the following performance objectives with respect to the equipment they house:

- Maintain required operating environments as specified by the manufacturer.
- Protect operating personnel from electrical shock or other hazards associated with the normal operation of the equipment.
- Resist unauthorized access or tampering.
- Secure equipment against malfunction due to vibration or mechanical shock.
- Permit ease of maintenance, future equipment expansion, and anticipated reconfiguration of system components.

Working Copy

2.1.14 CMS cabinets and configurations shall be provided as described below:

- Operator stations with visual displays, keyboards and writing space.
- Field interface units with field terminal blocks.
- All CMS enclosures not installed in a controlled access area shall be provided with locks.
- The use of tamper switches shall be determined on a case by case basis.

2.1.15 One visual display in the CMR shall be capable of being dedicated to alarm messages.

2.1.16 The interface units shall include communications control circuitry for the CMS network and have programming and storage capability. The system shall be capable of 100% expansion in the number of alarm/control circuits and interface units without degrading its conformance to applicable codes and standards.

2.1.17 The interface units shall be designed to function under the ambient environmental conditions at their installed locations and be protected from the dusty and corrosive atmosphere underground.

2.1.18 The primary human interface shall be the operator station including visual display and keyboard. The operator station shall have the capability to demand and display data, issue instructions and retrieve stored information. The operator station shall also provide visible alarm functions, including, preprogrammed data on the type of alarm, location, and other pertinent information.

2.1.19 The CMR Operator shall have the capability of communicating with the CMS via the operator or engineer station. These devices shall be capable of the following operations:

- Remove and restore points from scan without affecting the operation of the data acquisition equipment.
- Remove and restore measurements from alarm/limit checking.
- Request point values.
- Request a list and status of all points that are in an alarm condition.
- Request a hard copy of the information presented on a visual display.

- Request the display of any trend variable.
- Request printout of selected parameters.
- Request review of all measurements removed from scan and/or limit check.
- Request a list of all alarm limits for analog parameters limit checked by the CMS.

2.1.20 Visual display color coding of graphics and alarms shall be consistent throughout the system and be easily recognized by the CMR Operator.

2.1.21 The CMS shall have the capability to provide real-time data acquisition and monitoring of parameters associated with plant operations in a central location (CMR).

2.1.22 The CMS shall have the capability to monitor analog voltage and current sensor signals and detect changes in status of field contacts.

2.1.23 The interface unit shall perform signal conditioning such as conversion, scaling, linearization, filtering, isolation, common mode voltage rejection, surge protection and signal compensation on input. In addition, the interface unit shall perform input multiplexing, analog-to-digital, and broadcast the data on the CMS network.

2.1.24 When an alarm is transmitted over the CMS network, a visible and/or audible signal shall be initiated at the CMR Operator station visual display and a hard copy printout shall be available. Operator recognition and interpretation of alarms shall be aided by the use of multicolor and/or graphic displays.

2.1.25 Field-generated inputs to the interface unit shall be processed (converted to engineering units and limit checked, where required) and broadcast to the rest of the CMS via the CMS network. Data and circuit supervisory techniques shall be employed that ensure the capability of the system to transmit sensor data accurately and that verify that each interfacing unit is responding to requests for data from the operator station as follows:

2.1.26 The accuracy of a scanned analog point shall be ±0.2% of the full scale range of the signal as measured at the interface unit field input terminals.

2.1.27 The CMS shall provide the contact wetting voltage for contact inputs to the interface unit.

2.1.28 All sensor inputs shall be converted to engineering units prior to storage, display and printout as specified.

Working Copy

2.1.29 All analog process inputs shall be capable of being indicated as approaching an out of limit condition.

2.1.30 The CMS shall provide manual and automatic control functions for selected subsystems.

2.1.31 The interfacing unit shall perform signal conditioning such as conversion, scaling, linearization, filtering, isolation, common mode voltage rejection, surge protection and signal compensation on outputs. In addition, the interfacing unit shall perform output multiplexing and digital-to-analog conversions.

2.1.32 Control commands shall be transmitted from the CMR to the field devices over the CMS network.

2.1.33 CMS software shall be controlled under approved procedures.

2.2 Subsystem General Requirements

2.2.1 There are no CMS subsystem general requirements.

2.3 Operational Requirements

2.3.1 The layout and arrangement of consoles and the design of the work space envelope in which they are located shall be governed by the following requirements.

2.3.1.1 Use dimensions, locations, and arrangements that are consistent with the size, manner and position of the human body (i.e., anthropomorphic factors) during the performance of operational duties.

2.3.1.2 Use equipment arrangements that minimize the number of required operators, allow for expected personnel occupancy of the CMR or control area, minimize walking distance and permit anticipated traffic flow without causing congestion, injury or accidental actuation of control.

2.3.1.3 Use visual graphic display arrangements that provide cohesive functional grouping of related display elements.

2.3.1.4 Use proper illumination of controls and indicators, effective labeling practices including consistency, observable, and proven coding techniques. Coding techniques shall include shape and color coding for controls and indicators and size coding for labels.

2.3.1.5 Coding and labeling techniques shall also be applied to graphic and textual displays generated on the visual display.

Working Copy

2.3.1.6 Avoid sensory overload with negative indications (absence of indication conveys information) and delayed response (to an operator initiated control action) on visual displays.

2.3.2 The CMS shall act in conjunction with specific radiation detection equipment and the underground ventilation system to reconfigure airflow in the event airborne contamination is detected in the underground.

To handle waste in the underground, the CMS shall be capable of supporting a shift to filtration of the underground ventilation upon receipt of a hi-hi radiation signal from at least one of the alpha CAMs located at the exit of the active waste emplacement room or through manual initiation by the CMR Operator.

2.4 Structural

2.4.1 Structural requirements

2.4.1.1 There are no structural requirements for the CMS.

2.4.2 Functional Classification

2.4.2.1 The functional classification for the SSCs identified in this system shall be performed and documented in accordance with WP098-3023, Functional Classification procedure, and the functional classification section of the General Plant Design Description (GPDD).

2.4.2.2 Equipment associated with the Shift-to-Filtration is a major contributor to the Defense-in-Depth concept in preventing uncontrolled material releases. This equipment is functionally classified as Safety Significant.

2.4.2.3 Equipment not associated with the Shift-to-Filtration is designated as BOP.

2.5 General Arrangement and Essential Features

2.5.1 The CMS shall conform to the following general arrangement and essential features:

The general arrangement of the CMS equipment shall be as follows:

2.5.1.1 A minimum of one operator station with active visual displays shall be located in the Computer Room. Additional CMS equipment, as required for program testing, data storage, and interfacing to the Shared Computing Resources shall be located in the Computer Room, or other designated locations.

2.5.1.2 A minimum of two operator stations with active visual displays and one engineer station shall be provided in the CMR.

Working Copy

2.5.1.3 A minimum of one operator station with active visual displays and keyboard shall be provided for use in a designated location, in the event the CMR is uninhabitable.

2.5.1.4 Signals to be monitored by the CMS shall be connected to an interface unit. Signals generated by the CMS for control shall be made available at the appropriate interface unit. Interface units shall be located throughout the facility on the surface and in the underground.

2.5.1.5 A redundant network shall be routed throughout the site on the surface and in the underground for interfacing the CMS equipment. Techniques shall be employed to counteract attenuation and distortion.

2.5.1.6 The CMS equipment shall operate within all applicable specifications when subjected to the following power supply variations:

- 110 VAC ± 10%, 60 Hz ± 1%

2.5.1.7 The CMS equipment shall operate within all applicable specifications when subjected to the following environmental conditions:

- Temperature 59°F - 86°F
- Relative Humidity 20% -80%

2.5.1.8 CMS network and instrumentation cabling shall be run in separate raceways from 15kV power and 600V power and control cables.

2.6 Maintenance

2.6.1 All software, system and application, shall be modular to facilitate maintenance.

2.6.2 The operating system shall be modular to permit modification of individual programs without regeneration of the complete system.

2.6.3 Standard industry maintenance practices shall be followed for the CMS.

2.6.4 Access space for equipment installation, maintenance, repair and replacement shall be provided in accordance with the National Electrical Code, the National Electrical Safety Code, and manufacturer's requirements.

2.7 In-Service Inspection

2.7.1 Inspection and testing of the components of the CMS shall be performed in accordance with the manufacturer's written recommended practices and procedures. A test program shall be provided by the equipment manufacturer to ensure functional and continuous operation. The system shall allow periodic testing without disruption of alarm reporting or access control

functions. Visual inspection shall include inspection of connectors and cables for proper connection, inspection of unit mounting and inspection and testing of locks and tamper switches.

2.8 Instrumentation and Control

2.8.1 The CMS field interfacing units shall have internal temperature and intrusion sensors.

2.9 Interfacing Systems

2.9.1 Primary interfaces are requirements placed on other systems by the Central Monitoring System. Table CM I-I-1 is a list of WIPP systems upon which the Central Monitoring System has interface requirements.

2.9.2 Secondary interfaces are requirements placed on the Central Monitoring System by other systems. Table CM I-I-2 is a list of WIPP systems that have interface requirements on the Central Monitoring System.

TABLE CM I-I-1 - Primary Interfacing Systems

System Designator	System Title
AU00	Underground Facility & Equipment
CF00	Plant Buildings, Facilities, & Misc. Equipment
ED00	Electrical Distribution System
FP00	Fire Protection System
HV00	Heating, Ventilation and Air Conditioning System
PP00	Plant Protection

Working Copy

TABLE CM I-I-2 - Secondary Interfacing Systems

System Designator	System Title
CA00	Compressed Air System
CW00	Chilled Water System
ED00	Electrical Distribution System
EM00	Environmental Monitoring System
FP00	Fire Protection System
HV00	Heating, Ventilation and Air Conditioning System
PC00	Plant Communications
PP00	Plant Protection
PV00	Plant Vacuum System
RM00	Radiation Monitoring System
UH00	Underground Hoisting System
VU00	Ventilation Underground System
WD00	Water Distribution System
WH00	Waste Handling System

2.10 Quality Assurance

2.10.1 To assure that the required quality is achieved for all aspects and activities of the WIPP, a comprehensive QA program shall be implemented and controlled in conformance with, 10CFR830.120, ASME NQA-1, guidance documents NQA-2, Subpart 2.7, as set forth in the U.S. Department of Energy Carlsbad Field Office (DOE/CBFO) *Quality Assurance Program Description* DOE/CBFO-94-1012.

2.10.2 Design specifications, equipment specifications and drawings for the system, its components and equipment, and services related thereto shall contain quality assurance (QA) program requirements appropriate to the item or scope of work being defined or specified. These specifications shall also define quality assurance practices such as inspections, examinations, and tests appropriate to the specified item or service.

2.10.3 A graded approach shall be used. Application of the appropriate Quality Assurance requirements shall be determined in a manner consistent with the relative associated probability and consequences of risk and functional importance of the item or service involved, as represented by the Functional Classification of the equipment delineated in Section 2.4 above.

Working Copy

2.11 Codes and Standards

The designated editions of the following publications and their addenda are a part of this system design description. Detailed applications of these codes and standards are denoted in other sections and/or related specifications.

American National Standard Institute Codes (ANSI)

C2	National Electrical Safety Code (NESC)

American Society of Mechanical Engineers

NQA-1	Quality Assurance Program Requirements for Nuclear Facilities

U.S. Department of Energy

DOE Order 151.1A	Comprehensive Emergency Management System
DOE Order 420.1B	Facility Safety
DOE Order 430.1A	Life-Cycle Asset Management
DOE Order 4330.1	Maintenance Management Program for Nuclear Facilities
DOE/CBFO-94-1012	Quality Assurance Program Document

Electronic Industries Association (EIA)

232	Interface Between Data Terminal Equipment and Data Communication Equipment Employing Serial Binary Data Interchange
310	Cabinets, Racks, Panels and Associated Equipment
334	Signal Quality at Interface Between Data Terminal Equipment and Synchronous Data Circuit-Terminating Equipment for Serial Data Transmission
440	Fiber-Optic Terminology
429	Industry Standard for Connectors, Electrical Flat Cable Type

Working Copy

Federal

10 CFR 830.120	Quality Assurance Requirements
30 CFR 57	Health and Safety Standards - Underground Metal and Nonmetallic Mines
40 CFR 265	Interim Status Standards for Owners and Operators of Hazardous Waste Treatment, Storage, and Disposal Facilities
EPCRA	Emergency Planning and Community Right-to-Know Act
29 CFR 1910	Occupational Safety and Health Standards, General Industry

Institute of Electrical and Electronics Engineers (IEEE)

488	Digital Interface for Programmable Instrumentation
583	Modular Instrumentation and Digital Interface System Computer Automated Measurement and Control (CAMAC)
595	Serial Highway Interface System (CAMAC)

Instrument Systems, and Automation (ISA)

55.1	Hardware Testing of Digital Process Computers.

International Electrotechnical Commission (IEC)

61131-3	Programmable Controllers - Programming Languages

National Electrical Manufacturers Association (NEMA)

NEMA ICS 6-1993	Industrial Controls and Systems: Enclosures

Working Copy

National Fire Protection Association (NFPA)

NFPA No. 70	National Electrical Code (NEC).
NFPA No. 72	National Fire Alarm Code
NFPA No. 70B	Electrical Equipment Maintenance

2.12 Reliability Assurance

2.12.1 The CMS network shall be redundant such that no single point of failure in the network will cause a failure of the entire network.

2.12.2 The CMS shall be configured and operated in accordance with the applicable codes and standards.

2.12.3 The CMS shall be fault tolerant such that the failure of a single module will not result in the loss of all system functions. Interfacing units shall be capable of performing limited local monitoring and control functions independent of each other and the data highway.

2.12.4 Operator and engineer stations shall be capable of continuous operation under the stated conditions in Sections 2.5.1.6. and 2.5.1.7.

2.12.5 Operational reliability shall be achieved through the use of components and construction which meet the requirements of the referenced, applicable codes and standards, by acceptance tests and periodic visual inspections and by the application of good human factors engineering practices.

2.12.6 Uninterruptible power shall be provided for all the CMS equipment.

3.0 DESIGN DESCRIPTION

3.1 Summary

The Central Monitoring System (CMS) is a supervisory control and data acquisition (SCADA) system consisting of a mix of functional units communicating on a redundant network throughout the facility on the surface and in the underground. The network is made up of optical fiber and the associated fiber distribution units, switches, etc. The functional units are local processing units (LPUs), operator, server PCs, printers and uninterruptible power supplies (UPSs).

Working Copy

3.2 Detailed System Description

3.2.1 The CMS is used for real-time site data acquisition, display, storage, alarming and for the control of site components. The CMS monitors process, environmental, electrical, mechanical, radiation, and fire protection systems and provides manual and automatic control of underground ventilation, backup power, underground evacuation alarm automatic shift to filtration, and electrical distribution. Figure CM I-I-1 is a functional block diagram of the CMS.

3.2.2 CMS equipment in the support building and waste handling building is provided uninterruptible power by the Electrical Distribution System. LPUs, and workstations, other than those in the support building and waste handling building, are provided with uninterruptible power by uninterruptible power supplies that are a part of the CMS.

3.2.3 The CMS equipment includes integral self-testing that measures the performance of each unit and the performance of the network with respect to each unit.

When a malfunction is detected, the unit automatically responds to the malfunction, local indication is given at the unit and an alarm message is generated at a workstation in the CMR, and the unit status is indicated on the System Status Diagram. Self-testing starts when power is applied to each unit and the self-diagnostics are run during normal functioning of each unit without interference with real-time performance.

3.2.4 The CMS can be expanded to monitor and/or control approximately 16,000,000 point values.

3.2.5 Grounding

3.2.5.1 Instrument (analog and digital) grounds shall be connected to the plant ground grid, either directly or through the facility ground grid, through a removable link at one point only.

3.2.5.2 Equipment cabinets shall be connected to the plant ground grid, either directly or through the facility ground grid.

3.2.5.3 Although the CMS is grounded at many physical points, a one point grounding system philosophy has been followed. A detailed description of the grounding system is contained in the O&M manuals.

3.2.6 Central Monitoring System Indices

3.2.6.1 The Central Monitoring System indices includes each monitored point and each control point provided by the CMS. The data base provides detailed information on each point.

Working Copy

3.2.7 CMS software is controlled per approved procedures.

3.2.8 The CMS acts in conjunction with specific radiation detection equipment and the underground ventilation system to reconfigure airflow in the event airborne contamination is detected in the underground. The CMS SSCs associated with this shift are also classified as Vital Safety Systems (VSS).

To handle waste in the underground, the CMS must be capable of supporting a shift to filtration of the underground ventilation upon receipt of a hi-hi radiation signal from at least one of the alpha CAMs located at the exit of the active waste emplacement panel through manual initiation by the CMR Operator.

SEQUENCE OF EVENTS FOR SHIFT-TO-FILTRATION:

1. CMR Operator preselects which Filtration Fan will be energized upon a Shift-to-Filtration.

2. CMS receives a HI-HI radiation signal from one of the underground exit room or panel CAMs.

3. CMS sends a shift-to-filtration signal to VU01 which does the following:

   a. Stops Ventilation Fan(s).
   b. Starts selected Filtration Fan.
   c. Provides signals to dampers to route ventilation through HEPA filters.

4. CMS receives a signal from VU01 that filtration mode has been initiated.

5. CMS sends signals for the following:

   a. BHD 313 regulators close dampers
   b. BHD 336 closes
   c. Construction BHD
   d. Skid A3 stops after 100 seconds

3.3 System Performance Characteristics

3.3.1 Site parameters and status points are continuously monitored and/or controlled by the CMS during normal, off-normal and infrequent site conditions. The CMS accepts analog and contact status signals for monitoring and provides analog and contact output signals for control.

3.3.2 The CMS includes monitoring functions for fire, process, radiation, environmental and other systems.

3.3.3 The CMS provides the following remote manual controls from the CMR:

- Underground ventilation fans stop
- Underground HEPA filtration mode initiation/cancellation
- Underground filtration fan start/stop
- Selected underground bulkhead doors and dampers open/close
- CMR HEPA filtration initiation/cancellation
- Backup diesel generators start/stop
- Selected site power distribution breakers open/close
- Underground evacuation alarm initiation/cancellation

3.3.4 The CMS automatically provides contact output control signals to control the following plant components by performing the necessary logic using signals received from plant instrumentation:

- Underground ventilation fan stop control based on high waste hoist tower differential pressure
- Underground HEPA filtration mode initiation (based on underground alpha or beta radiation alarms)
- Underground bulkhead damper and underground bulkhead door closed (based on HEPA filtration status)
- CMR air filter mode initiation/cancellation (based on effluent monitoring station C radiation alarm status)
- Underground evacuation alarm initiation (based on underground fire alarm indication)

3.3.5 The CMS provides alarms in the CMR from alarm signals provided as inputs to the CMS by other plant systems and by limit alarm checking analog inputs from the plant systems.

3.3.6 Monitored parameters, component status and audible and visual alarms are provided in the CMR by the CMS at a workstation with hard copies available.

3.3.7 The CMS accepts analog voltage or current and contact status signals.

3.3.8 CMS data are collected and stored for WIPP use on a server PC which is connected to the Shared Computing Resources (PC05).

Working Copy

3.4 System Arrangement

3.4.1 The CMS consists of local processing units (LPUs), operator and engineer workstations server PCs, printers and uninterruptible power supplies (UPSs).

3.4.2 The system boundary between the CMS and other plant systems with equipment monitored and/or controlled by the CMS occurs at the LPU screw terminals to which the cables providing the connection to the other systems equipment are terminated.

3.5 Component Design Description

3.5.1 Local Processing Units (LPUs)

3.5.1.1 An LPU consists of an electronics section and a termination section. The electronics section includes network switch, a controller module (processing and memory), a power supply, and input/output (I/O) modules. LPUs related to shift to filtration have redundant controller modules and power supplies. The termination section houses the terminal blocks that interface the I/O modules with the site monitoring and control circuits.

3.5.1.2 An LPU monitors analog signals and detects changes in the state of contacts from site components. It provides the voltage for contact input sensing and the transducer power for some analog inputs. The LPU also provides analog and contact outputs for control of site components. They perform signal processing which includes analog-to-digital and digital-to-analog conversions, conversion to engineering units, and other standard and custom conversions, as required by the interfacing systems. LPUs can process a mix of analog and digital inputs and outputs.

3.5.1.3 The LPU memory contains the data base of all the input and output point information related to that LPU. It also contains the program to employ those points for monitoring or control of site components. It can be programmed to execute logic and control in any of the IEC 61131-3 defined languages. An LPU will continue to run in the absence of the network.

3.5.1.4 Each LPU broadcasts all its information on the network at least once each second. All other LPUs listen for information they need to execute their program.

3.5.1.5 In the salt dust atmosphere in the underground and on the surface where a controlled environment is not available, the LPUs are packaged in NEMA 4X enclosures and equipped with individual, self-contained air conditioning units as necessary.

3.5.1.6 All LPU doors are equipped with intrusion switches. A CMS alarm will occur when an LPU door is opened. The CMR should be notified before an operating LPU cabinet door is opened.

Working Copy

3.5.1.7 An alarm event that occurs in any LPU will broadcast on the CMS network and be available at all units on the network within approximately one second.

3.5.1.8 A detailed description of the LPU is contained in the O&M manuals.

3.5.2 Operator Workstations (HMIs)

3.5.2.1 An operator workstation is a standard PC with keyboard and mouse but has dual monitors. It is connected to the CMS network.

3.5.2.2 The operator workstation is the CMS interface between the CMR Operator and site processes. The operator workstation provides the interactive graphics, hardware, and human-machine interface for the operator. It can accept all points on the network. The points to be monitored can be displayed, trended and printed.

3.5.2.3 An operator workstation can be configured with an alarm screen which generates visual displays and audible alarms.

3.5.2.4 Alarm priorities are defined as follows:

Priority 3: Urgent - Immediate action required.

Priority 2: May be impactive on a operating conditions

Priority 1: Warning - Abnormal condition detected. Failure to respond could eventually result in a degradation or loss of equipment.

Priority 0: Information - Notification of status change. No response necessary under normal conditions.

Alarm priorities are indicated on the alarm screen and printer by color coding as follows:

Priority 3: Red
Priority 2: Magenta
Priority 1: Yellow
Priority 0: White

When the alarm returns to Normal, it is shown in green.

3.5.2.5 A detailed description of the operator workstation is contained in the O&M manuals.

3.5.3 Engineer Workstation (HMI)

3.5.3.1 An engineer workstation is a standard PC with keyboard and mouse and may have single or dual monitors. It is connected to the CMS network. The engineer workstation has the necessary software to make modifications to the CMS.

3.5.3.2 An engineer workstation can also perform all the functions of an operator workstation.

3.5.3.3 The engineer workstation provides the interactive programs, hardware, and interfaces required to program and maintain the CMS software. From the engineer workstation, tasks such as the definition of process points, building logic and control, building graphic diagrams, downloading of software to LPUs and other units, and reinitialization of the CMS can be accomplished.

3.5.3.4 LPU logic and control programs can use all five of the standard IEC 61131-3 programming languages plus flowcharts or a combination of the languages. The programs are written at an engineer workstation using the SIXNET supplied ISaGRAF software.

3.5.3.5 HMI graphic are developed at an engineer workstation using the Citect Graphical User Interface (GUI) software.

3.5.3.6 A detailed description of the engineer workstation, ISaGRAF software, and Citect software, is contained in the O&M manuals.

3.5.4 Server PCs (HMIs)

3.5.4.1 The CMS includes redundant Server PCs. Points broadcast on the CMS network are accessed by the Server PCs. The Server PCs are connected, through a firewall to the WIPP Shared Computing Resources (WIPPnet) providing controlled access to CMS data from around the WIPP project.

3.5.4.2 The Server PCs run the Citect software providing the user with the following capabilities:

- Collect, archive, and retrieve CMS point values and status.
- Display CMS point values and statuses as numeric values and/or as graphical trends.
- Display historical actual value and status data in a tabular and or graphical trend format for a user-specified range of dates and times that can be viewed, printed, or saved as ASCII data.
- Create hourly, daily, weekly, and monthly data logs with user-selectable collection frequencies.

Working Copy

- Calculate average value, integral value, minimum value, maximum value, time in alarm, and number of alarms for a user-specified range of dates and times.

3.5.4.3 A detailed description of the of the server PCs is contained in the O&M manuals.

3.5.5 CMS Network

3.5.5.1 The CMS network is the communication link between the CMS units. The redundant network is 12 strand, multimode, optical fiber cable and is routed to each unit on the network. The network is designed such that no single point failure on the network will cause failure of the entire network.

3.5.5.2 The CMS communications system using the network enables the CMR Operator to monitor the plant parameters and status and perform manual control of site components.

3.5.5.3 A detailed description of the CMS network is contained in the O&M manuals.

3.5.6 Printers

3.5.6.1 Printers provide color printouts of the visual display screens, points in alarm status changes, etc. CMS output can be directed to any of the four printers, but typically will be sent to the printer closest to the operator. Output can be either "on demand" printouts requested by the operator, or regularly scheduled periodic reports.

3.5.7 Uninterruptible Power Supplies (UPSs)

3.5.7.1 UPSs provide battery-backed, transient free power. The CMS equipment in the support building and waste handling building is provided with UPS power by the site electrical system. The CMS equipment located in other parts of the site is provided with power by individual UPS units that are a part of the CMS. CMS Emergency Power Disconnect switches in the CMR disconnects all UPS power to the CMS equipment in the CMR and computer room.

3.5.7.2 The CMS is powered from UPSs capable of supplying power for a minimum of 30 minutes following the loss of site AC power. Momentary interruptions, voltage or frequency transients or the total loss of site AC power have no affect on the CMS.

3.5.7.3 For the CMS UPSs supplying power to the LPUs, low battery voltage alarms are provided to the CMS in the form of contacts.

Working Copy

3.6 Instrumentation and Control

3.6.1 LPUs have internal temperature and intrusion sensors. Control requirements are covered under applicable headings elsewhere in this SDD.

3.7 System Interfaces

3.7.1 Monitoring

3.7.1.1 The CMS monitors analog and contact status signals for system and component parameters and status for the following systems and subsystems:

System/Subsystem	System Designator
Plant Air Distribution & Compression	CA01
Chilled Water Cooling	CW02
13.8 KV Switchgear & Equipment	ED02
4160 V & 2400 V Switchgear	ED03
480 V Switchgear	ED04
480 V Motor Control Centers	ED05
Diesel Generators	ED09
13.8 KV Switchgear & Equipment	ED10
Radioactive Effluent Monitoring	EM01
Meteorological Monitoring	EM03
Seismic Monitoring	EM04
Fire Water Supply and Distribution	FP01
Fire Detection and Alarm	FP03
Building 411 CH HVAC	HV01
Building 411 RH HVAC	HV02
Building 451 HVAC	HV03
Building 413 HVAC	HV04
Buildings 452, 453, 456 HVAC	HV05
Plant Public Address (PA) and Alarm	PC03
Security Protection and Response	PP02
Plant Vacuum	PV00
CAMS	RM01
ARMS (RH only)	RM03
Salt Handling Hoist	UH04
Waste Hoist	UH06
Surface Fans & Filters	VU01
Ventilation Control	VU03
Air Flow Monitor and Control	VU06
Domestic/Utility Water	WD01
Raw Water, Storage Tanks and Chlorine	WD02
RH Waste Handling Equipment	WH03

Working Copy

3.7.2 Control

The CMS provides analog and contact control signals for the following systems and subsystems:

System/Subsystem	System Designator
Plant Air Distribution and Compression	CA01
13.8 KV Switchgear & Equipment	ED02
4160 V & 2400 V Switchgear	ED03
480 V Switchgear	ED04
Diesel Generators	ED09
13.8 Switchgear & Equipment	ED10
Radioactive Effluent Monitoring	EM01
Building 451 HVAC	HV03
Plant Public Address (PA) and Alarm	PC03
Surface Fans & Filters	VU01
Ventilation Control	VU03
Air Flow Monitor and Control	VU06

3.7.3 Primary interfaces are requirements placed on other systems by the Central Monitoring System Table CM I-I-3 is a list of WIPP systems upon which the Central Monitoring System has interface requirements.

3.7.4 Secondary interfaces are requirements placed on the Central Monitoring System by other systems. Table CM I-I-4 is a list of WIPP systems that have interface requirements on the Central Monitoring System.

Working Copy

TABLE CM I-I-3 - Primary Interfacing Systems

SYSTEM	SYSTEM TITLE	FUNCTION
AU00	Underground Facility and Equipment	• Provide space and mounting for CMS equipment.
CF00	Confinement Facilities System	• Provide space and mounting for CMS equipment. • Provide a false floor in the CMR and computer room. • Provide two-hour fire walls with a one and one-half hour Class B fire door on each opening around the computer room and CMR .
ED00	Electrical System - Surface and Underground	• Provide power, lighting, and grounding for CMS equipment. • Provide isolated, transient free, uninterruptible power for CMS equipment in the waste handling building and support building. • Provide emergency power disconnects in locations readily accessible to the system operator.
FP00	Fire Protection System	• Provide fire protection for CMS equipment. • An ordinary hazard group, wet pipe sprinkler system shall be installed in the CMR and computer room. • Provide portable fire extinguishers in locations readily accessible to the system operator. NFPA No. 75-1976, Standard for the Protection of Electric Electronic Computer/Data Processing. Equipment, shall be referred to for additional considerations.
HV00	Heating, Ventilating and Air Conditioning	• Provide HVAC for CMS equipment.
PP00	Plant Protection	• Provide locks on the computer room doors

Working Copy

TABLE CM I-I-4 - Secondary Interfacing Systems

SYSTEM	SYSTEM TITLE	FUNCTION
CA00	Compressed Air System	• Provide status monitoring and alarms for equipment. • Provide control for stopping air compressors.
CW00	Chilled Water Systems	• Provide status monitoring and alarms for equipment.
ED00	Electrical System - Surface and Underground	• Provide status monitoring and alarms for equipment. • Provide control and trip functions for selected equipment. • Provide logic.
EM00	Effluent and Environmental Monitoring System	• Provide remote indication and/or alarms in the CMR for equipment. • Provide control to stop Skid A3 upon shift to filtration.
FP00	Fire Protection System	• Provide status monitoring and alarms for equipment.
HV00	Heating, Ventilating and Air Conditioning	• The operating status of major equipment, flows at critical locations, pressure differential 22oss HEPA filters, and pressure differential between outside and critical areas shall be monitored by the CMS and annunciated in the CMR.
PC00	Plant Communications	• Provide status monitoring, alarms, and control for the underground evacuation alarm.
PP00	Plant Protection	• Provide intrusion status monitoring and alarms at locations around site.
PV00	Plant Vacuum System	• Provide remote display and alarm of the plant vacuum systems manifold pressure to alarm on loss of vacuum.
RM00	Radiation Monitoring System	• Provide remote display, recording and alarm of selected CAM, ARM, and REMS units. • Provide electrical signal interfaces for data and control.
UH00	Underground Hoisting System	• Provide remote display, recording and alarm of hoist control and operation. • Provide electrical signal interfaces for data.
VU00	Ventilation Underground	• Provide status monitoring and alarms for equipment. • Provide control for bulkhead regulators and doors. • Provide ventilation and filtration fan control. • Provide logic to change configuration in an emergency. • Provide logic to change mode of ventilation.
WD00	Water Distribution	• Provide monitoring of the parameters and alarms for equipment.
WH00	Waste Handling Equipment	• Provide remote display and/or alarms for equipment.

Working Copy

4.0 OPERATIONS

The CMS is operated in accordance with approved operating procedures.

5.0 SYSTEM LIMITATIONS, SETPOINTS, and PRECAUTIONS

5.1 Limitations

5.1.1 The CMS should be operated by qualified personnel only.

5.1.2 The LPUs each include a 24-VDC power supply. LPUs related to shift to filtration have redundant 24-VDC power supplies. The remaining LPUs do not have redundant power supplies.

5.1.3 LPUs with output interposing relays also include 12-VDC power supplies to power the relays.

5.2 Setpoints

5.2.1 There are no alarm setpoints associated with the CMS except as listed in Table CM I-I-5.

5.3 Precautions

5.3.1 CMS equipment covered by this SDD is not designed to meet the Design Basis Earthquake (DBE) or other uncommon event such as a tornado. Following such an event, the equipment must be checked functionally to ensure it is satisfactorily performing its specified functions.

5.3.2 After a potentially damaging event such as an earthquake or tornado, information obtained from the system, such as the CMR and computer room network, and LPUs is subject to question until the equipment is functionally checked to determine if any problems exist.

TABLE CM I-I-5 - System Alarm Setpoints

CMS Parameter	Software Setpoint
LPU Cabinet Temperature High	110 DEG F
	95 DEG F (NEMA 4X CABINETS)
LPU Cabinet Temperature Low	35 DEG F

Working Copy

6.0 OFF-NORMAL EVENTS AND RECOVERY

The CMS is operated in accordance with approved operating procedures.

All CMS equipment is supplied UPS power. If AC power is lost, the CMS will continue to run for a minimum of 30 minutes.

The CMS network is redundant such that no single point of failure in the network will cause a failure of the entire network.

7.0 MAINTENANCE

7.1 Maintenance Approach

A graded approach to maintenance shall be used. Maintenance activities shall be performed with no significant reduction in operating efficiency. Periodicity of preventive maintenance may be modified based on operating history and evaluation by engineering.

7.1.1 Maintenance is performed on the CMS by Maintenance Technicians trained on the CMS.

7.2 Corrective Maintenance

7.2.1 Corrective maintenance Work Instructions are written in accordance with approved procedures.

7.2.2 Spare parts are maintained on-site for corrective maintenance.

7.3 Preventive Maintenance

7.3.1 Preventive maintenance is performed on the CMS in accordance with approved procedures.

7.3.2 The procedures perform visual checks, functionality, voltages, and cleaning.

7.4 In-Service Inspection

7.4.1 In-Service Inspection is performed on the CMS in as part of approved preventive maintenance procedures.

7.4.2 A CMS graphic diagram displays the status of each CMS unit.

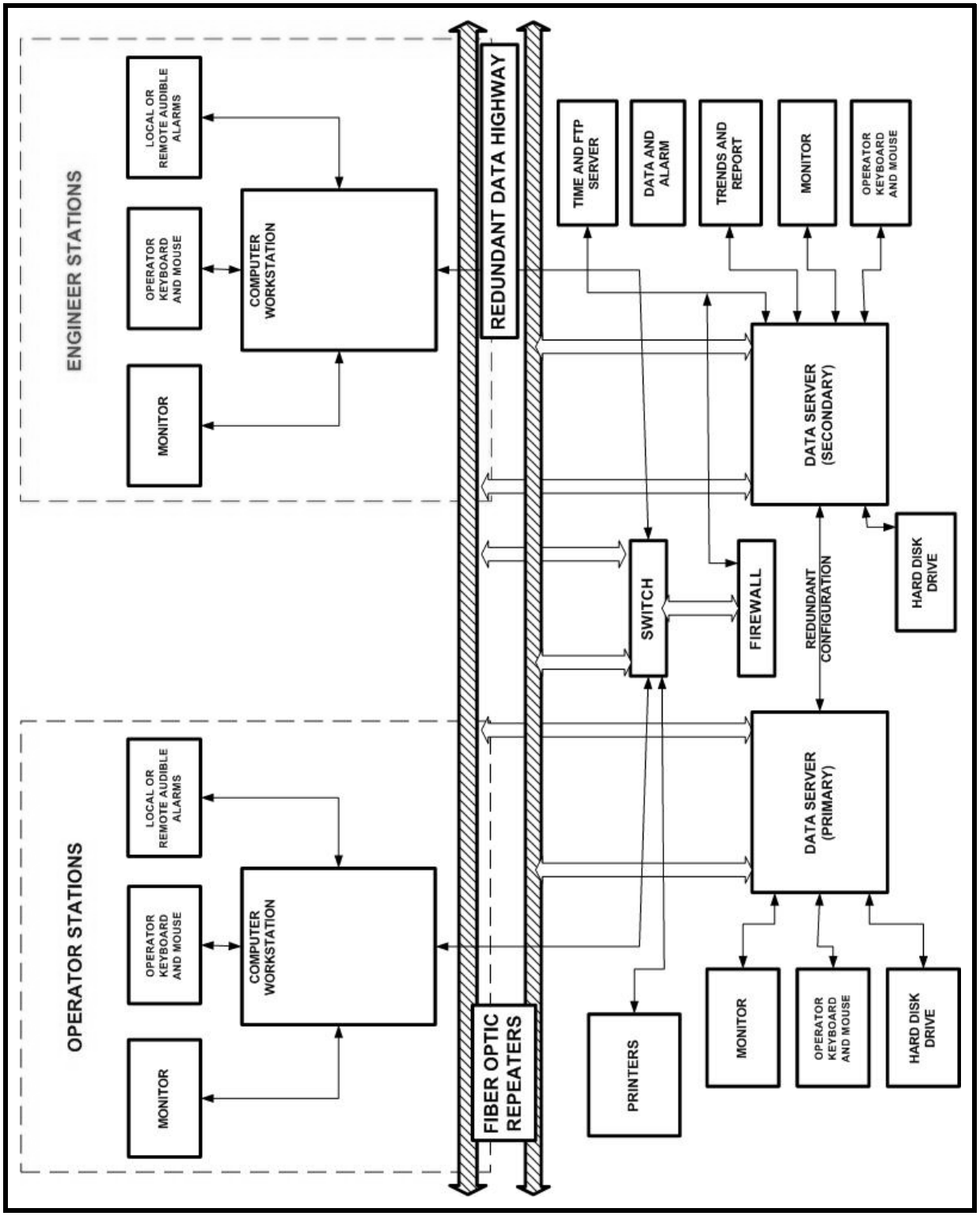

FIGURE CM-1-1-1 CMS Functional Block Diagram

Working Copy

Part I, Chapter II

Subsystem CM02, Central Monitoring Room (CMR)

TABLE OF CONTENTS

CM02 is not a subsystem, it is a collection of various items.

1.0 PRIMARY FUNCTIONS I-II-1

2.0 DESIGN REQUIREMENTS I-II-1

2.1 General I-II-1

2.2 Subsystem General Requirements I-II-2

2.3 Operational Requirements I-II-2

2.4 Structural I-II-2

2.5 General Arrangement and Essential Features I-II-2

2.6 Maintenance I-II-3

2.7 In-Service Inspection I-II-3

2.8 Instrumentation and Control I-II-3

2.9 Interfacing Systems I-II-4

2.10 Quality Assurance I-II-5

2.11 Codes and Standards I-II-5

2.12 Reliability Assurance I-II-5

3.0 DESIGN DESCRIPTION I-II-5

3.1 Summary I-II-5

3.2 Detailed System Description I-II-5

3.3 System Performance Characteristics I-II-6

3.4 System Arrangement I-II-7

3.5 Component Design Description I-II-7

Working Copy

3.6 Instrumentation and Control I-II-7

3.7 System Interfaces I-II-7

4.0 OPERATIONS I-II-11

5.0 SYSTEM LIMITATIONS, SETPOINTS, and PRECAUTIONS I-II-11

5.1 Limitations I-II-11

5.2 Setpoints I-II-11

5.3 Precautions I-II-11

6.0 OFF-NORMAL EVENTS and RECOVERY I-II-11

6.1 Loss of Electrical Power I-II-11

6.2 Seismic Event or Tornado I-II-11

7.0 MAINTENANCE I-II-12

Working Copy

LIST OF FIGURES

Figure Page

Figure CM-I-II-1 Central Monitoring Room System Block Diagram I-II-12

Working Copy

LIST OF TABLES

Table Page

TABLE CM I-II-1 - Primary Interface Systems I-II-4

TABLE CM I-II-2 - Secondary Interface Systems I-II-4

TABLE CM I-II-3 - Primary Interfacing Systems I-II-9

TABLE CM I-II-4 - Secondary Interfacing Systems I-II-10

Working Copy

Chapter I-II

Subsystem CM02, Central Monitoring Room (CMR)

1.0 PRIMARY FUNCTIONS

The CMR provides a central location for the following activities:

1.1 Monitoring and/or controlling the following site and offsite parameters and conditions:

- Parameters associated with required plant operating conditions
- All major site support system parameters
- Plant alarms
- Location of TRUPACT-II trucks
- Weather conditions along TRUPACT-II truck routes

1.2 A central communications center with the following:

- Phones
- Master public address system
- Mine phones
- Two-way radio

1.3 Reporting of occurrences by all employees

1.4 Providing site conditions to the Emergency Operations Center (EOC) (PC06).

1.5 The assembly of advisors to monitor an abnormal condition and provide operational assistance.

2.0 DESIGN REQUIREMENTS

2.1 General

The CMR shall provide a central location for the following activities:

2.1.1 Monitoring site and off-site parameters and status.

2.1.2 Site communications including dial phone, the public address, mine phone and radio.

2.1.3 Reporting of occurrences by employees.

2.1.4 Providing site condition data and information to the EOC.

Working Copy

2.1.5 The assembly of advisors to monitor an emergency condition and provide operational assistance.

2.2 Subsystem General Requirements

The "subsystem" connotation is used for purposes of convention.

2.3 Operational Requirements

The CMR operational requirements are as follows:

2.3.1 Access to the CMR shall be controlled. Access shall be via locked doors and permission from the CMR Operator.

2.3.2 Audible and visual alarms shall be provided in the CMR to aid the operator in understanding the status of the site and to provide alerts to potentially unsafe conditions or potential damage to site equipment.

2.3.3 If a significant number of alarm or indicator lights are required to complement the CRT displays, the same color coding as used for the CRT displays shall be used.

2.3.4 The weather conditions along TRUPACT-II truck routes shall be monitored in the CMR.

2.3.5 The following equipment shall be provided in the CMR:

- Central Monitoring System Equipment (CM01)
- Plant Communications Equipment (PC00)
- Satellite weather station
- Radio Fire Alarm Reporting System (RFAR) (FP04)

2.4 Structural

There are no structural requirements for the CMR beyond those described in SDD CF00.

2.5 General Arrangement and Essential Features

The CMR shall conform to the following general arrangement and essentials features:

2.5.1 The temperatures and humidity in the CMR shall be as recommended by the manufactures of the CMR equipment.

Working Copy

2.5.2 False floors shall be provided in the CMR for cable routing.

2.5.3 The operational environment in the CMR shall meet the following performance objectives:

2.5.3.1 Provide adequate illumination of instrumentation and working spaces without causing glare or reflections on the face of instruments and panels per SDD ED00.

2.5.3.2 Minimize the noise level inside the CMR due to noisy equipment, high personnel occupancy or outside sources. The background noise level shall not exceed 70 dBA.

2.5.3.3 Provide adequate heating, ventilation and air conditioning, and radiation protection.

2.5.3.4 Emergency lighting in the CMR shall be automatically activated and immediately available on failure of the normal lighting system per SDD ED00.

2.5.3.5 Two-hour fire walls with a one and one-half class B fire door on each opening shall be provided around the computer room and the CMR per SDD FP00.

2.5.3.6 Protected by a fire detection and protection system per SDD FP00.

2.6 Maintenance

There are no maintenance requirements specific to the CMR.

Equipment and service facilities located in the CMR shall be maintained in accordance with the requirements of the system providing the equipment or service.

2.7 In-Service Inspection

There are no in-service inspection requirements for the CMR.

Equipment and service facilities located in the CMR shall have in-service inspection in accordance with the requirements of the system providing the equipment or service.

2.8 Instrumentation and Control

There are no instrument and control requirements for the CMR.

Instrument and control requirements of the equipment and service facilities located in the CMR shall be in accordance with the requirements of the system providing the equipment or service.

Working Copy

2.9 Interfacing Systems

Interfacing systems of the equipment and service facilities located in the CMR shall be in accordance with the system providing the equipment or service.

2.9.1 Primary interfaces are requirements placed on other systems by the CMR. Table CM I-II-1 is a list of WIPP systems upon which the CMR has interface requirements.

2.9.2 Secondary interfaces are requirements placed on the CMR by other systems. Table CM I-II-2 is a list of WIPP systems that have interface requirements on the CMR.

TABLE CM I-II-1 - Primary Interface Systems

System Designator	System Title
CF00	Plant Buildings, Facilities, & Misc. Equipment
ED00	Electrical system Surface and Underground
FP00	Fire Protection System
HV00	Heating, Ventilation and Air Conditioning System
PP00	Plant Protection

TABLE CM I-II-2 - Secondary Interface Systems

System Designator	System Title
CA00	Compressed Air System
CM00	Central Monitoring System
CW00	Chilled Water System
ED00	Electrical System Surface and Underground
EM00	Effluent & Environmental Monitoring
FP00	Fire Protection System
HV00	Heating, Ventilation and Air Conditioning
PC00	Plant Communications
PP00	Plant Protection
PV00	Plant Vacuum system
RM00	Radiation Monitoring
UH00	Underground Hoisting System
VU00	Ventilation Underground
WD00	Water Distribution
WH00	Waste Handling

2.10 Quality Assurance

Quality Assurance requirements of the equipment and service facilities located in the CMR shall be in accordance with the requirements of the system providing the equipment or service.

2.11 Codes and Standards

Codes and Standards of the CMR shall be in accordance with the requirements of CF00.

Codes and Standards of the equipment and service facilities located in the CMR shall be in accordance with the requirements of the system providing the equipment or service.

2.12 Reliability Assurance

The fresh air supply to the CMR shall have a HEPA filter option to provide continuous occupancy in the event of a radioactive material release.

3.0 DESIGN DESCRIPTION

3.1 Summary

The CMR, located on the second floor of the Support Building, is the central location for monitoring site data and conditions. It is the location of the primary man-machine interface with the CMS, Remote Fire Alarm Reporting (RFAR) station, a satellite weather service and a commercial television weather station.

The operator is in voice contact with the on-site and off-site activities via the dial phones, mine pager phones, public address and intercom system and two-way radio. The master control console for public address and evacuation alarm control is located in the CMR. Space, phones, and furniture are provided in the CMR for the activities of the Operations Assistance Team during emergency conditions.

3.2 Detailed System Description

Figure CM I-II-1 is a functional block diagram of the CMR.

The CMR is the central location for monitoring major site support system parameters, equipment alarms, fire alarms, the location of TRUPACT-II trucks, weather conditions along the truck routes, and site conditions to enhance safe and efficient operation of the facility.

It is the central location to monitor the facility operating conditions and is the central location for the reporting of occurrences by employees. The CMR

Working Copy

includes the operator stations to control selected site components such as underground ventilation fans, bulkhead doors and dampers, the initiation and cancellation of CMR HEPA filtration, backup diesel generator operation, and site power distribution breaker operation.

The CMR provides a continuously manned central location furnished with central monitoring system (CMS) operator and engineer stations; plant communications system dial phones, mine pager phones, the plant PA and alarms system master control console; and a two-way radio base station; a satellite weather monitor; a commercial television station weather monitor; and space, communications, and furnishings for the Operations Assistance Team (OAT).

Weather conditions along the TRUPACT-II trailer routes are monitored in the CMR on a personal computer connected to the KAVOURAS satellite weather system. The CMR also includes a television monitor, which provides the operator with nationwide weather conditions and forecasts on a continuous basis from a commercial weather station.

3.3 System Performance Characteristics

3.3.1 The CMR will remain functional during normal and emergency conditions.

3.3.2 The CMR ventilation system is redundant and includes a HEPA filter option to provide occupancy following a radioactive materials release accident.

3.3.3 The CMR is provided power from an off-site source during normal conditions and from on-site backup power during loss of off-site power conditions.

3.3.4 The CMR is powered from a UPS capable of supplying power for 30 minutes following the loss of all ac power. Momentary interruptions, voltage or frequency transients or the total loss of site ac power has no affect on the CMR, other than a reduction in light level and the loss of power at non-essential service power outlets. Upon loss of off-site power, the battery backup provides power to the UPS for uninterrupted operation of equipment in the CMR until the site backup power is established.

3.3.5 The CMR is continuously manned.

3.3.6 Most major site system parameters, system status and system alarms are monitored in the CMR via the CMS.

3.3.7 The Radio Fire Alarm Reporting (RFAR) system in the CMR provides additional facility fire alarms to the CMR that are not monitored by the CMS.

3.3.8 Operator response to alarms of off-normal and emergency conditions is made via verbal communications with personnel in the field.

Working Copy

3.3.9 The CMR includes facilities to accommodate the Operations Assistance Team (OAT).

3.3.10 The CMR is the reporting location for WIPP occurrences and emergency.

3.3.11 When the EOC is activated, site status is reported to the EOC, as requested by the EOC, from the CMR via the dial phone system.

3.4 System Arrangement

The CMR, located on the second floor of the support building, is the central location for monitoring site data and conditions and for the control of selected site components.

The CMR is arranged to provide operator visibility and access to all monitoring, control, communications components and to isolate the operator from CMR traffic and other distractions.

The OAT is provided desk and wall space in the CMR and has ready access to the monitoring and communications functions.

A CMS Power Emergency Disconnect switch that turns off the UPS power to the CMR and computer room is located 60 inches above the floor near each of the two CMR doors.

The CMR is continuously manned and access to the CMR is administratively controlled by the CMR operator.

Two fluorescent lamp fixtures provided from an uninterruptible power source are located above the operator stations.

3.5 Component Design Description

The CMR includes components that are a part of other systems, as described in the interfacing Section 3.7.

3.6 Instrumentation and Control

The CMR has no instrumentation and control systems other than those that are controlled by interfacing systems.

3.7 System Interfaces

3.7.1 Primary interfaces are requirements placed on other systems by the CMR. Table CM I-II-3 is a list of WIPP systems upon which the CMR has interface requirements.

Working Copy

3.7.2 Secondary interfaces are requirements placed on the CMR by other systems. Table CM I-II-4 is a list of WIPP systems that have interface requirements on the CMR.

Working Copy

TABLE CM I-II-3 - Primary Interfacing Systems

SYSTEM	SYSTEM TITLE	FUNCTION
CF00	Confinement Facilities System	• Provide space for equipment. • Provide a false floor. • Provide two-hour fire walls with a one and one-half hour Class B fire door on each opening.
ED00	Electrical System - Surface and Underground	• Provide power, lighting, and grounding for equipment. • Provide isolated, transient free, uninterruptible power for equipment. • Provide emergency power disconnects in locations readily accessible to the system operator. • Provide emergency lighting. • Provide service power outlets.
FP00	Fire Protection System	• Provide fire protection. • Provide an ordinary hazard group, wet pipe sprinkler system. • Provide portable fire extinguishers in locations readily accessible to the system operator. NFPA No. 75-1976, Standard for the Protection of Electric Electronic Computer/Data Processing Equipment, shall be referred to for additional considerations.
HV00	Heating, Ventilating and Air Conditioning	• Provide personnel comfort. • Provide HEPA filtered air upon detection of airborne radioactive materials at Station C. • Provide satisfactory environment for equipment operation.
PP00	Plant Protection	• Provide locks on the doors leading to the CMR.

Working Copy

TABLE CM I-II-4 - Secondary Interfacing Systems

SYSTEM	SYSTEM TITLE	FUNCTION
CA00	Compressed Air System	• Data, status monitoring, control, and alarms via the CMS.
CM00	Central Monitoring System	• Provide the system for monitoring and control of site components.
CW00	Chilled Water Systems	• Status monitoring and alarms via the CMS.
ED00	Electrical System	• Data, status monitoring, control, and alarms via the CMS.
EM00	Effluent and Environmental Monitoring System	• Data, status monitoring, control, and alarms via the CMS.
FP00	Fire Protection System	• Data, status monitoring and alarms via the CMS. • Status monitoring and alarms via the RFAR. • Local Fire Panel.
HV00	Heating, Ventilating and Air Conditioning	• Data, status monitoring and alarms via the CMS.
PC00	Plant Communications	• Control for the underground evacuation alarm via the CMS. • Telephones, mine paging phones, PA and alarm systems, radio, shared computing resources. • Communication with EOC.
PP00	Plant Protection	• Status monitoring and alarms at locations around site via the CMS.
PV00	Plant Vacuum System	• Data, status monitoring, and alarms via the CMS.
RM00	Radiation Monitoring System	• Data, status monitoring, control, and alarm via the CMS.
UH00	Underground Hoisting System	• Data, status monitoring, and alarm via the CMS.
VU00	Ventilation Underground	• Data, status monitoring, and alarms via the CMS.
WD00	Water Distribution	• Data, status monitoring, and alarms via the CMS.
WH00	Waste Handling Equipment	• Status monitoring and alarms via the CMS.

Working Copy

4.0 OPERATIONS

The CMR includes components that are a part of other systems, the operation of which is described in section 4.0 of that System Design Description (SDD CM00-PC00) for the subsystem which interface the CMR.

5.0 SYSTEM LIMITATIONS, SETPOINTS, and PRECAUTIONS

5.1 Limitations

5.1.1 In case of the loss of normal AC power all lighting in the CMR and in the computer room will be lost except for two light fixtures in the CMR that are on the Electrical System UPS, which will provide power for 30 minutes, minimum.

5.2 Setpoints

5.2.1 There are no setpoints specific to the CMR except those that are part of other systems which is described in that system SDD.

5.3 Precautions

5.3.1 Normally, the CMR is staffed with one person. In case of emergencies, fast response by back-up personnel is required. At all times visitors and personnel with casual interest in the CMR operations should engage the CMR operator only with his permission.

6.0 OFF-NORMAL EVENTS and RECOVERY

6.1 Loss of Electrical Power

The equipment in the CMR as described in this SDD and the CMR fluorescent emergency lighting fixtures are powered from the Electrical System UPS in the Support Building and will continue to operate for 30 minutes, minimum, following the loss of normal AC power.

6.2 Seismic Event or Tornado

The CMR is not designed to operate during or after a design basis earthquake or during or after being exposed to the effects of a tornado.

6.3 If the CMR can not be used, a CMS Operator Station, without a printer, is provided in the Security Control Room in the Guard and Security Building to be used as a backup CMR. The weather monitoring system will not be available in the backup CMR.

Working Copy

7.0 MAINTENANCE

There are no specific maintenance requirements for the CMR.

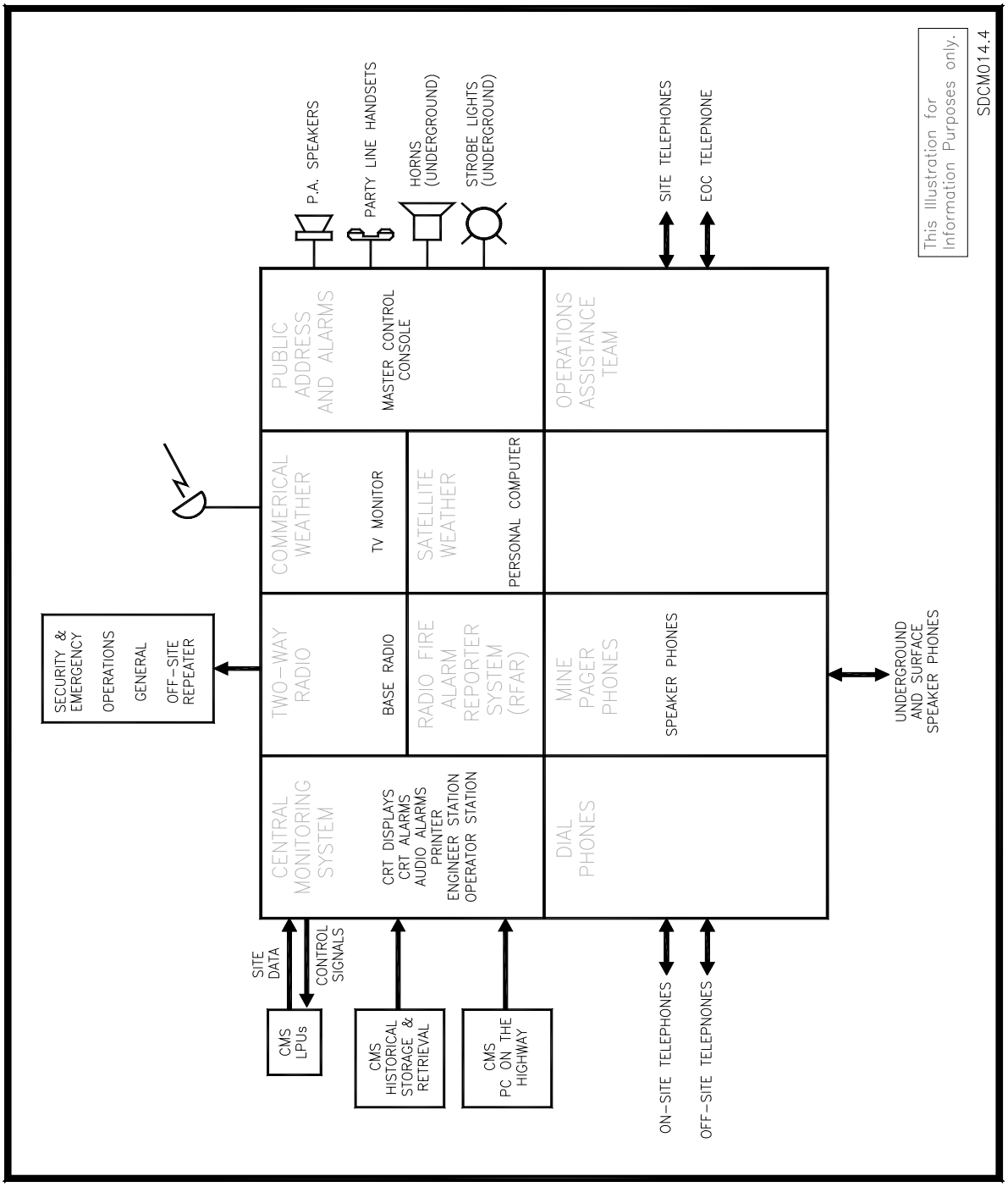

Figure CM-I-II-1 Central Monitoring Room System Block Diagram

Working Copy

Part I, Chapter III

Subsystem CM03, WIPP Waste Information System (WWIS)/Waste Data System (WDS)

TABLE OF CONTENTS

1.0 PRIMARY FUNCTIONS I-III-1

2.0 DESIGN REQUIREMENTS I-III-1

2.1 General I-III-1

2.2 Subsystem General Requirements I-III-2

2.3 Operation I-III-2

2.4 Structural I-III-2

2.5 General Arrangement and Essential Features I-III-3

2.6 Maintenance I-III-3

2.7 In-Service Inspections I-III-3

2.8 Instrumentation and Control I-III-3

2.9 Interfacing Systems I-III-3

2.10 Quality Assurance I-III-4

2.11 Codes and Standards I-III-4

2.12 Reliability Assurance I-III-4

3.0 DESIGN DESCRIPTION I-III-4

3.1 Summary I-III-4

3.2 Detailed System Description I-III-4

3.3 System Performance Characteristics I-III-5

3.4 System Arrangement I-III-5

3.5 Component Design Descriptions I-III-5

Working Copy

3.6 Instrumentation and Control I-III-5

3.7 System Interfaces I-III-5

4.0 OPERATIONS I-III-6

4.1 Start-Up I-III-6

4.2 Normal Operations I-III-6

4.3 Infrequent Operations I-III-7

4.4 Shutdown I-III-7

5.0 SYSTEM LIMITATIONS, SET POINTS, and PRECAUTIONS I-III-7

6.0 OFF-NORMAL EVENTS and RECOVERY I-III-7

6.1 Loss of Electrical Power I-III-7

6.2 System or Component Malfunction I-III-7

6.3 Network Loss I-III-7

7.0 MAINTENANCE I-III-8

7.1 Maintenance Approach I-III-8

7.2 Corrective Maintenance I-III-8

7.3 Preventive Maintenance I-III-8

7.4 In-Service Inspection I-III-8

Working Copy

LIST OF TABLES

Table Page

TABLE CM I-III-1 - Primary Interfacing Systems I-III-3

TABLE CM I-III-2 - Secondary Interfacing Systems I-III-3

TABLE CM I-III-3 - Primary Interfacing Systems I-III-5

TABLE CM I-III-4 - Secondary Interfacing Systems I-III-6

Part I, Chapter III

Subsystem CM03, WIPP Waste Information System (WWIS/WDS)

SUMMARY

The WIPP Waste Information System/Waste Data System (WWIS/WDS) (CM03) is a system of computerized tools in a multiuser relational database designed to facilitate the effective management and tracking of transuranic (TRU) waste from DOE waste generator sites to the WIPP. The system provides those organizations that have responsibility for managing TRU waste with the ability to 1) characterize the waste destined for the WIPP, 2) certify that the waste meets the WIPP Waste Acceptance Criteria (WAC), and 3) identify the specific waste containers that will comprise the waste shipments to the WIPP. The system also provides a permanent record of the location of each waste container and MgO sack emplaced in the WIPP underground.

1.0 PRIMARY FUNCTIONS

The system provides the following primary functions:

1.1 Entry and validation of waste characterization data for waste destined for the WIPP (as required by the RCRA Part B Permit Application Waste Analysis Plan).

1.2 Entry and validation of waste certification data for waste destined for the WIPP (as required by the WAC).

1.3 Entry and validation of waste transportation data for waste destined for the WIPP (as required by the TRAMPAC).

1.4 Entry and validation of waste emplacement location data for waste emplaced at the WIPP (as required by the RCRA Part B Permit Application Waste Analysis Plan).

2.0 DESIGN REQUIREMENTS

2.1 General

2.1.1 The system is a multiuser relational database residing on a computer at the WIPP and providing connectivity to waste generator sites via the DOE Business Network, and/or other approved network.

2.1.2 The system shall provide waste generator sites that have computerized waste tracking systems with the ability to electronically transfer data from their databases into the system.

Working Copy

2.1.3 The system shall provide waste generator sites that do not have computerized waste tracking systems or that have smaller quantities of waste with the ability to log in and interactively enter data directly into the system database.

2.1.4 The system shall provide automatic edit and range checks to ensure data is entered correctly and meets the appropriate acceptance criteria.

2.1.5 The system shall provide user validation security to ensure only authorized users are allowed access to the system and that they only have access to data and functions to which they are entitled.

2.1.6 The system shall provide an audit trail of each change made to the database fields including the identity of the user making the change and the stated reason(s) for doing so.

2.1.7 The system shall provide all of the features and functions identified in the Software Design Description and the Software Implementation Description.

2.2 Subsystem General Requirements

Waste Data System (WDS) components may be accessed via web interface. Open Database Connectivity (ODBC) and/or Java Database Connectivity (JDBC) access may be used as permitted.

2.3 Operation

The system shall consist of the following components:

- Database server
- Web server

2.3.1 The web server and database server are physically separated and a firewall protects the system from unauthorized access.

2.4 Structural

2.4.1 The structural requirements of the system hardware shall be the same as specified for the Shared Computing Resources subsystem (PC05).

2.4.2 All system components shall be designed to the Design Classifications ascertained from the methodology specified in SDD GPDD.

2.4.3 All system components shall be designed and purchased to Design Class IIIB. Conventional design, fabrication, and construction practices shall be used as performed by commercial/industrial facilities which employ high standards of quality control and adhere to recognized codes and standards.

2.4.4 Diagrams of system nomenclature are retained electronically on WIPPNET.

2.5 General Arrangement and Essential Features

The general arrangement and essential features of the system hardware shall meet the same requirements as specified for the Shared Computing Resources subsystem (PC05).

2.6 Maintenance

2.6.1 The maintenance requirements for the system hardware shall be the same as specified for the Shared Computing Resources subsystem (PC05).

2.6.2 Maintenance of the personal computers used to access the system is the responsibility of the individual users.

2.7 In-Service Inspections

The in-service inspection requirements for the system hardware shall be the same as specified for the Shared Computing Resources subsystem (PC05).

2.8 Instrumentation and Control

There are no subsystem-specific instrumentation and control requirements for the system.

2.9 Interfacing Systems

2.9.1 Primary interfaces are requirements placed on other systems by the system. Table CM I-III-1 is a list of WIPP systems upon which the system has interface requirements.

TABLE CM I-III-1 - Primary Interfacing Systems	
System Designator	System Title
CM05	Barcode Reader System

2.9.2 Secondary interfaces are requirements placed on the system by other systems. Table CM I-III-2 is a list of WIPP systems that have interface requirements on the system.

TABLE CM I-III-2 - Secondary Interfacing Systems	
System Designator	System Title
CM05	Barcode Reader System

2.10 Quality Assurance

2.10.1 The quality assurance requirements for the system software are described in the approved WIPP Waste Information System Software Quality Assurance Program.

2.10.2 There are no subsystem-specific quality assurance requirements for the system hardware.

2.11 Codes and Standards

The system hardware shall comply with the same codes and standards as specified for the Shared Computing Resources subsystem (PC05).

2.12 Reliability Assurance

2.12.1 The system hardware shall meet the same reliability and availability requirements as specified for the Shared Computing Resources subsystem (PC05).

2.12.2 The system database backups shall be retained on removable media and stored in a fireproof file cabinet in the system operations office.

3.0 DESIGN DESCRIPTION

3.1 Summary

3.1.1 The system hardware consists of servers interfaced to the WIPPnet wide-area network and providing connectivity to the TRU waste generator sites via the DOE Business Network, and/or other approved network.

3.1.2 The client computers used to access the system database server(s) are standard personal computers and are not covered by this system design description.

3.1.3 For a summary of the system software, refer to the approved WIPP Waste Design System Software Design Description.

3.2 Detailed System Description

3.2.1 The system hardware consists of servers running an operating system and a compatible version of the database management system, web server and/or terminal server software.

3.2.1.1 One server designated as the primary database server is located in the server room of the Skeen-Whitlock Building in Carlsbad, NM.

3.2.1.2 The second computer designated as the backup server is located in the server room of the WIPP Records Archive Center (WRAC) in Carlsbad, NM.

3.2.2 The computers used to access the system database server(s) are standard personal computers and are not covered by this system design description.

3.2.3 For a detailed description of the system software, refer to the approved WIPP Waste Information System Software Design Description.

3.3 System Performance Characteristics

The system performance characteristics are defined in the latest revision of the WDS User's Manual.

3.4 System Arrangement

The system hardware consists of a primary computer located in the server room of the Skeen-Whitlock Building and a backup server located in the WRAC server room in Carlsbad, New Mexico.

3.5 Component Design Descriptions

The components of the system software are described in the approved WIPP Waste Information System Software Design Description.

3.6 Instrumentation and Control

The system does not contain any instrumentation nor does it perform any control functions.

3.7 System Interfaces

3.7.1 Primary interfaces are requirements placed on other systems by the system. Table CM I-III-3 is a list of WIPP systems upon which the system has interface requirements.

TABLE CM I-III-3 - Primary Interfacing Systems

SYSTEM	SYSTEM TITLE	FUNCTION
CM05	Barcode Reader System	Provide an interface which allows the software in the CH barcode readers to determine the status of a waste container or assembly

3.7.2 Secondary interfaces are requirements placed on the system by other systems. Table CM I-III-4 is a list of WIPP systems that have interface requirements on the system.

TABLE CM I-III-4 - Secondary Interfacing Systems

SYSTEM	SYSTEM TITLE	FUNCTION
CM05	Barcode Reader System	Provide an interface to allow the underground barcode readers to pass storage locations to the system database

4.0 OPERATIONS

4.1 Start-Up

4.1.1 Initial Conditions

4.1.1.1 The server has successfully booted to the login prompt.

4.1.1.2 Electrical power to the system hardware is available from the appropriate UPS(s).

4.1.1.3 The portions of the WIPPnet infrastructure necessary to provide connectivity to the applicable system servers are operational.

4.1.2 Procedure Guidelines

4.1.2.1 Log in to the server by entering the proper password using the serial port.

4.1.2.2 Type "Start/SYS," then "Start/SP/Console," then log in.

4.1.2.3 At the console prompt, enter the command, "boot" and then watch the monitor for errors as the server boots up.

4.1.2.4 After booting is complete, log on to the system account by entering "root" at the login: prompt, and entering the proper password when prompted, to investigate any errors.

4.1.2.5 Log off of the system server by entering the command, "logout."

4.2 Normal Operations

4.2.1 Refer to the appropriate computer, operating system, and/or database management system user's manual for information pertaining to the normal operation of the system hardware and/or operating environment.

Working Copy

4.2.2 Refer to the WDS User's Manual for information pertaining to the normal operation of the system software.

4.3 Infrequent Operations

4.3.1 There are no expected infrequent operations defined for the system.

4.4 Shutdown

4.4.1 Initial Conditions

4.4.1.1 Start-up of the system has been successfully completed and the system is operating on normal AC and/or UPS power, as applicable.

4.4.2 Procedure Guidelines

4.4.2.1 Log on to the system server as the ROOT account.

4.4.2.2 At the UNIX prompt, enter the command, "/usr/ucb/shutdown -h now" and then watch the monitor to ensure the server shuts down properly.

4.4.2.3 After shutdown is complete, close the system console port on the server.

5.0 SYSTEM LIMITATIONS, SET POINTS, and PRECAUTIONS

5.1 The number of concurrent system users is unlimited due to the processor license metric implementation.

6.0 OFF-NORMAL EVENTS and RECOVERY

6.1 Loss of Electrical Power

6.1.1 Upon the loss of AC power to the Skeen-Whitlock Building Computer Room, the WIPP Building UPS is designed to continue to supply power to the system servers for four hours. In the event the power outage is expected to last longer than this, an orderly shutdown of the system servers must be performed in accordance with Section 4.4 of this SDD.

6.2 System or Component Malfunction

6.2.1 Upon the failure of primary system servers, system operations may continue by using backup software and/or hardware.

6.3 Network Loss

6.3.1 In the event of the loss of WIPPNET or DOENET connectivity to system, the WDS Operations Office may be used to continue limited system operations

Working Copy

depending on the extent of the loss of connectivity. The WDS Operations Office is directly connected to the Skeen-Whitlock Building server room.

7.0 MAINTENANCE

7.1 Maintenance Approach

The system hardware will be repaired and/or replaced if and when it fails. Patching is performed to software and hardware on an as needed basis.

7.2 Corrective Maintenance

The repair/replacement of system hardware components is performed as necessary under a maintenance contract with the equipment vendor. No WIPP generated component repair/replacement procedures are required.

7.3 Preventive Maintenance

There are no scheduled preventive maintenance procedures performed on the system hardware. Patching is performed to software and hardware on an as needed basis.

7.4 In-Service Inspection

7.4.1 The daily usage of the system database servers provides adequate in-service inspection of the system hardware.

Working Copy

Part I, Chapter IV
Subsystem CM05, Waste Handling Barcode System

TABLE OF CONTENTS

1.0 PRIMARY FUNCTIONS I-IV-1

2.0 DESIGN REQUIREMENTS I-IV-1

2.1 General I-IV-1

2.2 Subsystem General Requirements I-IV-2

2.3 Operational Requirements I-IV-2

2.4 Structural I-IV-3

2.4.1 Structural requirements I-IV-3

2.5 General Arrangement and Essential Features I-IV-3

2.5.1 General Arrangement I-IV-3

2.6 Maintenance I-IV-4

2.7 In-Service Inspection I-IV-4

2.8 Instrumentation and Control I-IV-4

2.9 Interfacing Systems I-IV-4

2.10 Quality Assurance I-IV-5

2.11 Codes and Standards I-IV-5

2.12 Reliability Assurance I-IV-5

3.0 DESIGN DESCRIPTION I-IV-5

3.1 Summary I-IV-5

3.2 Detailed System Description I-IV-6

3.3 System Performance Characteristics I-IV-7

3.4 System Arrangement I-IV-7

Working Copy

3.5 Component Design Description I-IV-7

3.6 Instrumentation and Control I-IV-8

3.7 System Interfaces I-IV-8

4.0 OPERATIONS I-IV-6

5.0 SYSTEM LIMITATIONS, SETPOINTS, and PRECAUTIONS I-IV-6

5.1 Limitations I-IV-6

5.2 Setpoints I-IV-6

6.0 OFF-NORMAL EVENTS AND RECOVERY I-IV-7

7.0 MAINTENANCE I-IV-7

7.1 Maintenance Approach I-IV-7

7.2 Corrective Maintenance I-IV-7

7.3 Preventive Maintenance I-IV-7

7.4 In-Service Inspection I-IV-7

Working Copy

LIST OF TABLES

Table Page

TABLE CM I-IV-1 - Primary Interfacing Systems I-IV-4

TABLE CM I-IV-2 - Secondary Interfacing Systems I-IV-5

TABLE CM I-IV-3 - Primary Interfacing Systems I-IV-8

TABLE CM I-IV-4 - Secondary Interfacing Systems I-IV-6

Working Copy

Chapter I-IV
Subsystem CM05, Waste Handling Barcode System

1.0 PRIMARY FUNCTIONS

The primary functions of the Waste Handling Barcode Reader System are as follows:

1.1 Provide the Waste Handlers with the ability to verify that the waste containers in the CH Bay have a system status which indicates that they are ready to be processed.

1.2 Provide the Waste Handlers with the ability to enter and verify the storage locations for MgO and waste containers into the system database in near real time.

1.3 Provide the Waste Handlers with information about missing/duplicate storage locations.

1.4 Provide the Waste Handlers with CPR/MgO ratios in the active panel.

2.0 DESIGN REQUIREMENTS

The functional classifications are defined in the DSA and the GPDD.

2.1 General

2.1.1 The Barcode Reader System shall be capable of reading the barcodes specified in DOE/WIPP-02-3122, Contact-Handled Transuranic Waste Acceptance Criteria for the Waste Isolation Pilot Plant, Section 3.2.5, Identification/Labeling.

2.1.2 The barcode readers shall be industrial grade, hand held computers which are designed for use in harsh conditions and have the following attributes:

Have an operating system and support software which make them easily programmable

Contain sufficient memory to allow the capacity for programs developed to read and process bar code and associate information.

(The above requirements may alternatively be provided by the use of a local server running a web based application in conjunction with the operating system and software on the barcode reader.)

Be capable of ANSI/IEEE 802.11 set of standards for Radio Communications.

Working Copy

Have an alpha/numeric keyboard and color display for the operator interface.

Use lithium ion rechargeable batteries or better for power.

Be capable of operating in temperatures of 40 to 85 degrees Fahrenheit with 5% to 95% relative humidity non condensing.

2.1.3 The access points used to communicate with the bar code readers shall have the following attributes:

Be capable of using ANSI/IEEE 802.11 set of standards for Radio. Communications.

Be capable of connecting to a variety of antennae.

Be capable of operating in temperatures of 40 to 85 degrees Fahrenheit with 5% to 85% relative humidity non condensing.

2.1.4 The switch used with the access points in the CH Bay shall have the following attributes:

Be the source for the configuration of the access points used in the CH Bay.

Be capable of adjusting the coverage area of the access points connected to it by adjusting the signal strength of their transmissions. The level for each access point is to be set as low as possible while still ensuring reliable communications. This setting is included in the Security Plan as one of the measures used to prevent unauthorized access to the intranet.

Be capable of providing a firewall to prevent unauthorized access to the site network.

Be capable of supplying the power for the access points in the CH Bay.

Be capable of providing encrypted communication on the wireless link with the barcode readers.

2.2 Subsystem General Requirements

2.2.1 There are no Barcode Reader subsystem requirements.

2.3 Operational Requirements

2.3.1 The barcode readers shall be designed to minimize awkward or repetitive motion.

Working Copy

2.3.2 The design shall incorporate graphics displays that can be clearly read in an indoor lighting environment and backlit for low lighting environments.

2.4 Structural

2.4.1 Structural requirements

2.4.1.1 There are no structural requirements for the Barcode Reader System.

2.5 General Arrangement and Essential Features

2.5.1 General Arrangement

2.5.1.1 There shall be recharging cradles located near the locations in which barcode readers are used for the barcode readers as a unit and/or for the batteries used in the barcode readers. The barcode reader cradles may be capable of allowing the readers to be connected to the site LAN via a communications cable attached to the cradle.

2.5.1.2 General Arrangement in the CH Bay

A. There shall be sufficient barcode readers provided such that each work station for unloading CH waste has a barcode reader available at all times.

B. There shall be redundant access points for communications with the site LAN positioned to minimize radio shadows in the areas of the unloading docks where the barcode readers will be used.

2.5.1.3 General Arrangement in the Underground.

A. There shall be sufficient barcode readers provided to allow a waste handler to enter the location data after placing a waste container or assembly in the repository and a second waste handler to verify the location.

B. There shall be a base access point to provide radio communications between the barcode reader(s) in the underground and the site LAN located in the intake drift of the active waste panel.

C. There shall be radio bridges placed in the active panel as necessary to provide radio coverage to the area in which the barcode readers are used.

2.6 Maintenance

2.6.1 Software for the Barcode Reader System will be maintained under the procedures for CM03.

2.6.2 The operating system and associated software used in the barcode readers shall be commonly used allowing for custom programs that can be easily developed.

2.6.3 Sufficient spare units shall be maintained in the warehouse to allow the barcode readers and access points, to be exchanged and, where economical, returned to the manufacturer for repair.

2.7 In-Service Inspection

2.7.1 In-Service inspection shall consist of visual inspection to ensure connectors are in place and the barcode readers respond appropriately to operator inputs and are capable of connecting to the network when located in an area covered by an access point.

2.8 Instrumentation and Control

2.8.1 Messages embedded in the software of the barcode readers shall inform the operator of error conditions as with any other personal computer.

2.8.2 The access points and ethernet switches shall have lamps which indicate the status of the device.

2.9 Interfacing Systems

2.9.1 Primary interfaces are requirements placed on other systems by the Barcode Reader System. Table CM I-IV-1 is a list of WIPP systems upon which the Barcode Reader System has interface requirements.

TABLE CM I-IV-1 - Primary Interfacing Systems

System Designator	System Title
AU00	Underground Facility and Equipment
CF00	Plant Buildings, Facilities, and Misc. Equipment
CM03	WWIS/WDS
ED00	Electrical System Surface and Underground
FP00	Fire Protection System
HV00	Heating, Ventilation and Air Conditioning System
PP00	Plant Protection

Working Copy

2.9.2 Secondary interfaces are requirements placed on the Barcode Reader System by other systems. Table CM I-IV-2 is a list of WIPP systems that have interface requirements on the Barcode Reader System.

TABLE CM I-IV-2 - Secondary Interfacing Systems	
System Designator	System Title
CM03	WWIS/WDS

2.10 Quality Assurance

2.10.1 The quality assurance requirements for the WWIS/WDS software are described in the approved WDS Software Quality Assurance Program.

2.10.2 There are no subsystem-specific quality assurance requirements for the Barcode Reader hardware.

2.11 Codes and Standards

2.11.1 The Barcode Reader System hardware shall comply with the applicable codes and standards as specified for the Shared Computing Resources subsystem (PC05).

2.12 Reliability Assurance

2.12.1 The Barcode Reader hardware shall meet the same reliability and availability requirements as specified for the Shared Computing Resources subsystem (PC05).

2.12.2 Copies of any configuration files for the Barcode Reader System shall be kept in the WIPP Engineering File Room.

3.0 DESIGN DESCRIPTION

3.1 Summary

3.1.1 The Barcode Reader System in the CH Bay consists of sufficient barcode readers to support waste processing at four stations, an ethernet access point mounted above each TRUdock, and an ethernet switch designed to work with the access points used.

3.1.2 The Barcode Reader System in the active panel consists of sufficient barcode readers to process the emplacement of TRU waste, an ethernet access point at the entrance of the intake side of the panel and ethernet RF bridges to provide coverage of the active waste processing area.

Working Copy

3.2 Detailed System Description

3.2.1 CH Bay Barcode Reader System

3.2.1.1 The software for the barcode readers in the CH Bay provides the waste handlers with:

- A method of reading the bar code from a waste container of one or more containers in an assembly
- Informing the waste handler if the barcode number read is in the database and has an appropriate status to allow the waste container(s) to be processed.

3.2.1.2 At least one barcode reader is provided for each work station on each TRUdock in the CH Bay.

3.2.1.3 There is an ethernet access point mounted above each TRUdock such that the radio coverage overlaps two docks and minimizes radio shadows produced by shipping containers and other equipment on the docks.

3.2.1.4 There is an ethernet switch in the CH Bay which provides the access points a connection point to the site ethernet network and provides the access points with their configuration information and power over ethernet.

3.2.2 Underground Barcode Reader System

3.2.2.1 The software for the barcode readers in the underground provides a method for:

- One waste handler to read a barcode from a waste container or one container in an assembly and enter a location for the container or assembly
- Require a second waste handler to verify the location
- Verify that the location is valid and not a duplicate of an existing entry in the system database
- Provide the location of the waste container or assembly to the WDS system for insertion in the database
- Provide for entry of MgO container locations to support CPR/MgO tracking
- Provide the waste handler with information about the current CPR/MgO ratio.

Working Copy

3.2.2.2 There are sufficient barcode readers provided to allow one waste handler to enter the location information and a second waste handler to verify that the information entered is correct.

3.2.2.3 There is an ethernet access point located in the intake drift of the active panel.

3.2.2.4 There are sufficient RF bridges located in the active waste panel to relay the data between the barcode readers in use in the panel and the ethernet access point.

3.3 System Performance Characteristics

3.3.1 The barcode system uses spread spectrum radio communications per ANSI 802.11 set of standards. This provides a maximum communications rate of 11 megabytes per second for the radio communications portion of the ethernet network.

3.3.2 The power for the radio communications in the CH Bay is adjustable and is set at the lowest power setting consistent with reliability of the communications. Maximum power for ANSI 802.11 set of standards for communications is 100 mW.

3.3.3 The Barcode Reader System network is limited to communications between the barcode readers and the WDS.

3.4 System Arrangement

3.4.1 There is one barcode reader subsystem in the CH Bay consisting of several barcode readers and two access points connected to a common ethernet switch.

3.4.2 There is a Barcode Reader System in the active panel consisting of several barcode readers, one access point and the RF bridges needed to ensure communications between the barcode readers and the access point.

3.5 Component Design Description

3.5.1 The barcode readers are hand held computers running the Windows CE Operating System. These units are capable of communicating over an ANSI 802.11 set of standards for wireless ethernet network.

3.5.2 The RF communications equipment in the CH Bay are 802.11 set of standards for access points connected to an ethernet switch.

3.5.3 The RF communications equipment in the active panel consists of access points used as both an access point and as RF bridges where needed.

3.5.4 The main database is an Oracle compatible server.

3.6 Instrumentation and Control

3.6.1 The Barcode Reader System incorporates no instrumentation and control equipment.

3.7 System Interfaces

3.7.1 Primary interfaces are requirements placed on other systems by the Barcode Reader System. Table CM I-IV-3 is a list of WIPP systems upon which the Barcode Reader System has interface requirements.

TABLE CM I-IV-3 - Primary Interfacing Systems

SYSTEM	SYSTEM TITLE	FUNCTION
AU00	Underground Facility and Equipment	Provide space and mounting for Barcode Reader System equipment in the active waste panel.
CF00	Confinement Facilities and Special Structures	Provide space and mounting for Barcode Reader System equipment in the CH Bay.
CM03	WIPP WWIS/WDS	Provide a web-based interface, which allows the software for the CH barcode readers to determine the status of a waste container or assembly and in the underground provide the waste handlers with information about missing/duplicate storage locations and the MgO/CPR ratio in the active room.
ED00	Electrical System - Surface and Underground	Provide power and grounding for Barcode Reader System equipment.
FP00	Fire Protection System	Provide fire protection for Barcode Reader System equipment. Provide portable fire extinguishers in locations readily accessible to the system operator. NFPA No. 75-1976, Standard for the Protection of Electric Electronic Computer/Data Processing Equipment, shall be referred to for additional considerations.

TABLE CM I-IV-3 - Primary Interfacing Systems		
PP00	Plant Protection	Provide limited access to area around the Waste Handling Building to non-WIPP personnel and to ANSI 802.11 RF equipped computers into the Property Protected Area.

3.7.2 Secondary interfaces are requirements placed on the Barcode Reader System by other systems. Table CM I-IV-4 is a list of WIPP systems that have interface requirements on the Barcode Reader System.

TABLE CM I-IV-4 - Secondary Interfacing Systems		
SYSTEM	SYSTEM TITLE	FUNCTION
CM03	WIPP WWIS/WDS	Provide a web-based interface to allow the underground barcode readers to pass storage locations of waste and MgO containers to the system database

4.0 OPERATIONS

4.1 The Barcode Reader System is operated in accordance with approved operating procedures.

5.0 SYSTEM LIMITATIONS, SETPOINTS, and PRECAUTIONS

5.1 Limitations

5.1.1 The Barcode Reader System should be operated by qualified personnel only.

5.1.2 The barcode readers in this system run on lithium ion batteries which must be recharged periodically. Two types of cradles are provided to recharge the batteries. One type allows the entire barcode reader to be inserted into the cradle. The other type requires that the battery be removed from the barcode reader and inserted into the cradle. The barcode readers should not be left without a charged lithium Ion battery installed to protect the memory backup battery.

5.2 Setpoints

5.2.1 The power level for the RF signal strength of the access points in the CH Bay may be set to values less than the maximum 100 mW using a parameter in the access point configuration.

Working Copy

6.0 OFF-NORMAL EVENTS AND RECOVERY

6.1 The Barcode Reader System is not designed to withstand a design basis earthquake or tornado. After such an event the equipment should be checked to ensure it is performing properly.

6.2 The barcode readers are equipped with a Ni-MH memory backup battery which automatically recharges from the main battery. This battery is designed to retain information in the barcode reader memory for a minimum of 30 minutes with the main battery removed.

The memory backup battery will be fully discharged if the main battery is removed for several hours. If the memory backup battery is fully discharged it requires approximately 15 hours to fully recharge.

When the barcode reader reaches a very low battery state and prior to initial use of new batteries both batteries should be charged for at least 72 hours.

7.0 MAINTENANCE

7.1 Maintenance Approach

A graded approach to maintenance shall be used. Maintenance activities shall be performed with no significant reduction in operating efficiency. Periodicity may be modified based on operating history and evaluation by engineering.

7.2 Corrective Maintenance

7.2.1 There are no user replaceable internal parts in this equipment. Equipment malfunctions which cannot be corrected by restarting and/or reconnecting the major components require that the equipment be returned to the manufacturer for repair.

7.3 Preventive Maintenance

7.3.1 The preventive maintenance for this equipment consists of visual inspection and cleaning.

7.4 In-Service Inspection

7.4.1 The barcode reader equipment should be inspected at the beginning of each shift during which the equipment will be used.

Working Copy

Part II, Chapter I

Subsystem PC01, Dial Phones

TABLE OF CONTENTS

1.0 PRIMARY FUNCTIONS II-I-1

2.0 DESIGN REQUIREMENTS II-I-1

2.1 General II-I-1

2.2 Subsystem General Requirements II-I-1

2.3 Operational Requirements II-I-1

2.4 Structural II-I-2

2.5 General Arrangement and Essential Features II-I-2

2.6 Maintenance II-I-2

2.7 In-Service Inspection II-I-2

2.8 Instrumentation and Control II-I-2

2.9 Interfacing Systems II-I-3

2.10 Quality Assurance II-I-3

2.11 Codes and Standards II-I-3

2.12 Reliability Assurance II-I-4

3.0 DESIGN DESCRIPTION II-I-4

3.1 Summary II-I-4

3.2 Detailed System Description II-I-4

3.3 System Performance Characteristics II-I-6

3.4 System Arrangement II-I-7

3.5 Component Design Description II-I-7

3.6 Instrumentation and Control II-I-12

Working Copy

3.7 System Interfaces II-I-12

4.0 OPERATIONS II-I-14

5.0 SYSTEM LIMITATIONS, SETPOINTS, AND PRECAUTIONS II-I-14

5.1 Limitations II-I-14

5.2 Setpoints II-I-14

5.3 Precautions II-I-14

6.0 OFF-NORMAL EVENTS AND RECOVERY II-I-15

6.1 Loss of Electrical Power II-I-15

6.2 Seismic Event or Tornado II-I-15

6.3 System or Component Malfunction II-I-16

7.0 MAINTENANCE II-I-16

7.1 Maintenance Approach II-I-16

7.2 Corrective maintenance II-I-16

7.3 Preventative Maintenance II-I-16

7.4 In-Service Inspection II-I-16

Working Copy

LIST OF FIGURES

Figure Page

FIGURE II-I-1 Dial Phones System Diagram II-I-18

FIGURE PC II-I-2 - Telephone Hut Arrangement (BLDG 468) II-I-19

Working Copy

LIST OF TABLES

Table Page

TABLE PC II-I-1 - Dial Phones Primary Interfacing Systems II-I-12

TABLE PC II-I-2 - Dial Phones Secondary Interfacing Systems II-I-12

TABLE PC II-I-3 - Dial Phones System II-I-15

Working Copy

Chapter II-I

Subsystem PC01, Dial Phones

1.0 PRIMARY FUNCTIONS

The primary function of the Dial Phones subsystem is to provide conventional telephone service between site buildings and facilities and between the site and offsite locations such as the Skeen-Whitlock Building (SWB) and alternate EOC.

2.0 DESIGN REQUIREMENTS

2.1 General

The Dial Phone system includes all wired telephone and exchange hardware to support conventional telephone services for the WIPP Project at the site and the SWB.

2.2 Subsystem General Requirements

Conventional, commercial on-site and off-site telephone services shall be provided.

2.3 Operational Requirements

The operational requirements Dial Phones are as follows:

2.3.1 The WIPP dial phones shall be connected to the Carlsbad, New Mexico, exchange of the General Telephone Company of the Southwest.

2.3.2 An electronic private automatic branch exchange shall be provided at the site.

2.3.3 The dial telephone system shall be capable of serving the number of permanent employees at the WIPP site.

2.3.4 The dial phone system shall provide communication between buildings and facilities as required.

2.3.5 On-site cabling shall be provided for local data transmission between remote computer terminals and the Shared Computing Resources (PC05).

2.3.6 Sufficient trunk lines shall be provided for local and long distance service.

2.3.7 Off-site cabling shall be provided for dial access and dedicated data transmission lines to off-site locations via long distance toll and FTS service.

Working Copy

2.3.8 The dial phone system shall be a complete communication system with cable raceways and splices provided. It shall include telephone service to the water pump house and switch yard.

2.4 Structural

There are no special structural requirements for the Design Class IIIB equipment of the PC01 system.

2.5 General Arrangement and Essential Features

Exterior cabling shall be routed through instrumentation and communication raceway for distribution of the telephone system cables from the Telephone Building (468) to the other surface facilities.

Site telecommunications cabling shall include flexibility for local data transmission between various above and underground stations at the site via dedicated wire.

In office and large open areas in which movable partitions are used, power poles; ceiling drops; partition raceways; or under the floor telephone ducts as part of a three-way under the floor duct system (power, telephone, and special systems) shall be provided.

Conduit runs to telephone outlets shall be 3/4 inch, minimum. A pull wire shall be provided in every conduit. Junction boxes for telephone outlets shall be 4 inch square, minimum.

2.6 Maintenance

Maintenance for the PC01 subsystem equipment shall be provided by a contract with a qualified telecommunications vendor.

2.7 In-Service Inspection

There are no subsystem specific in-service inspection requirements for the PC01 equipment.

2.8 Instrumentation and Control

The PC01 battery charger has local instrumentation and controls to protect the PC01 battery backup system (see Section 3.5.13.1). Additionally, the PBX controller has built-in monitoring and alarm features to protect the controller (see Section 3.5.2).

Working Copy

2.9 Interfacing Systems

Refer to Section 3.7 for Interfacing System requirements.

2.10 Quality Assurance

There are no subsystem specific quality assurance requirements for the PC01 equipment.

2.11 Codes and Standards

American National Standard Institute Codes (ANSI)

C2	National Electrical Safety Code (NESC)

American Society of Mechanical Engineers

NQA-1	Quality Assurance Program Requirements for Nuclear Facilities

U.S. Department of Energy

DOE Order 430.1	Life-Cycle Asset Management
DOE Order 420.1	Facility Safety

Electronic Industries Association (EIA)

310	Racks, Panels and Associated Equipment
334	Signal Quality at Interface Between Data Processing Terminal Equipment and Synchronous Data Communications Equipment for Serial Data Transmission
440	Fiber-Optic Connector Terminations

Federal

10 CFR 830.120	Quality Assurance
30 CFR 57	Health and Safety Standards - Metal and Nonmetallic Underground Mines (Signaling).
40 CFR 265	Subpart D, Contingency Plan and Emergency Procedures

Working Copy

EPCRA	Emergency Planning and Community Right-to-Know Act
29 CFR 1910	Occupational Safety and Health Standards, General Standards

National Electrical Manufacturers Association (NEMA)

NEMA ICS 6-78	Enclosures for Industrial Controls and Systems, Rev. 1, Instrumentation and Control Systems

National Fire Protection Association (NFPA)

NFPA No. 70	National Electrical Code (NEC)
NFPA No. 72	Protective Signaling Systems
NFPA No. 70B	Electrical Equipment Maintenance

2.12 Reliability Assurance

There are no subsystem-specific reliability assurance requirements for the PC01 equipment.

3.0 DESIGN DESCRIPTION

3.1 Summary

The Dial Phones system is a private automatic telephone (PAX) exchange for on-site and off-site telephone communications. Dial phones and other terminal devices are located throughout the site. The telephone switchgear, backup batteries and battery charger are located in the telephone hut (Building 468) near the Support Building. Telephone communications are carried off of the site by cable and a microwave system that are owned and operated by the telephone company.

3.2 Detailed System Description

The dial phone system includes an advanced PAX telephone network of approximately 800 telephone stations located throughout the site controlled by an on-site digital communications controller. The controller has the capacity to serve, automatically, 1,056 on-site stations. Two attendant stations can be used for controlling incoming calls. The dial phone system also includes direct business lines.

An overall view of the system is given on Figure PC II-I-1.

Working Copy

3.2.1 Lines

Twenty-four direct in-dial trunk lines and 24 direct out-dial trunk lines from the communications controller and approximately 75 direct business lines, including telecopier (FAX) lines, are connected through a multiplexer and cable to the Carlsbad, New Mexico, exchange of the General Telephone Company (GTE) of the Southwest. A two-gigahertz microwave radio system, operating between the site and Carlsbad, has the capability to carry ten of the in-dial and ten of the out-dial lines. The multiplexer selects routing via the cable or the microwave system for each call.

Twelve FTS lines are multiplexed by the communications controller and transmitted to and from the GTE exchange over the cable to Carlsbad.

A digital link connects the WIPP site communications controller to the SWB in Carlsbad, NM, via the microwave radio system.

3.2.2 Communications Controller

The communications controller uses large scale integration with analog-to-digital and digital-to-analog converters, microprocessors, and pulse modulation digital switching. It can accommodate various types of terminals, such as single-line and multiple-line telephones and data adapters, data modules, attendant consoles and a maintenance administration terminal. The system includes such features as HOLD, CALL PICK-UP, and CALL FORWARDING and has the capability to provide over 200 service features. The integration of computer and communications technology provides both voice and data transmission service capabilities.

3.2.3 Terminal Equipment

Site personnel interface with the communications controller and the direct business lines via terminal equipment.

3.2.4 Site Telephones

Site telephones include single-line, four line, and 16-line instruments.

3.2.5 Data Adapters and Data Modules

Data adapters can be used with 16-line digital telephones to accommodate digital equipment such as terminals, printers, and computers. These adapters allow simultaneous voice and data communication. Two types of data adapters are available: asynchronous and synchronous. Data modules are available for applications not requiring simultaneous voice and data communication. Data adapters can also be used with an available four-line digital telephone.

Working Copy

3.2.6 Attendant Stations

Attendant stations are compact, desk-top operator switchboards. Under normal conditions an operator at one of these stations directs calls from outside callers, who use the site general telephone number, to specific site phones. Under emergency conditions an operator at the other attendant station controls incoming Emergency Operations Center calls.

3.2.7 Maintenance Administration Terminal

A Maintenance Administration Terminal (MAT) provides access to and management of the systems diagnostic and database software. The operating system automatically generates supervision and control fault information to the MAT. The maintenance management system is interactive with the system processors, switching network interface section and the miscellaneous section for fault indication. The system uses menu driven software and the MAT is the man-machine interface for maintenance personnel to interface with the system for overall system status, system diagnosis, traffic management reports, and data base reconfiguration.

3.2.8 Power

The system operates on -48 Vdc provided by a rectifier, which isolates the system from power line fluctuations. The rectifier, which is powered from 120VAC power provided by the site electrical distribution system, also maintains the charge on a bank of storage batteries. Upon loss of all AC power, the system will operate from battery power for approximately eight hours, depending upon the level of telephone usage. A portable stand-by diesel-generator is used to operate the system and prevent discharge and degradation of the batteries due to deep cycling during site power outages.

3.2.9 Shared Computing Resources (PC05) Wiring

The dial phones system also provides wiring for local data transmission on the local area network (LAN) between the Shared Computing Resources (PC05) and the computer terminals.

3.3 System Performance Characteristics

Under normal usage, loss of normal AC power to the dial phone PBX will not affect the operation of the dial phone system for approximately eight hours. Indefinite operation is possible with the use of a portable generator to provide power for the system.

Working Copy

3.4 System Arrangement

The digital communications controller, maintenance administration terminal and printer, main distribution frame, batteries and rectifiers are located on-site in the telephone hut (Building 468). The layout of the telephone hut is shown on Figure PC II-I-2. Attendant consoles are located in the Emergency Operations Center in the Safety and Emergency Services Facility and in the Security Control Room in the Guard and Security Building.

The multiplexer, microwave transceiver and microwave tower are located near the north access road west of the salt storage area and are connected to the dial phone system via cable to the telephone hut.

Approximately 800 pieces of terminal equipment (telephone sets) are located through the site.

Jacks for portable telephones are provided for maintenance communications.

Fax locations are specified in the WIPP Telephone Directory for the "FAX" locations.

The dial phones wiring from the system phones in each site building are terminated at a terminal board in each building. Cabling from each building terminal board to the telephone hut is provided by the ED00 System.

3.5 Component Design Description

The dial phone system includes single-, four-, and sixteen-line telephone sets, a digital communications controller, a main distribution frame, batteries, battery charger, portable diesel generator, and interconnecting cabling. A multiplexer, microwave transceiver, microwave tower and antenna, and the telephone cable leading from the site are the property of General Telephone and Electric (GTE). The entire system is maintained by GTE.

3.5.1 Lines

The lines from the site telephones are routed as two-pair cables to terminal boards within site buildings and facilities. Multiconductor cables are routed underground from the building terminal boards to the main distribution frame in the telephone hut and from the main distribution frame to the communications controller, except the direct business lines are routed by multiconductor underground from the main distribution frame to the on-site GTE multiplexer and off-site underground by cable.

The FTS lines are routed from the controller through the main distribution frame and then off-site underground by multiconductor cable. The digital link

Working Copy

to SWB is routed underground cable directly from the multiplexers in the communications controller to the on-site microwave system.

3.5.2 Communications Controller

The digital communications controller is a 1,056-station NEC Corporation NEAX2400 Information Management System (IMS), which uses large scale integration and microprocessors. Approximately 800 stations are in use. The controller is made up of modules arranged in vertical groups of modules. Important system equipment, such as processors and digital switching network are redundant: one system acts as an active unit and controls the system while the other system is in a standby state.

The controller operates from a primary power supply of -48 ±5 Vdc. The load on the rectifiers or batteries is approximately 40 amperes at -48 Vdc. It is made up of Port Interface Modules, Control Processor Modules, Miscellaneous Modules, a Display Panel, Top Units, Fan Units, and Base Units. Alarm lamps on the Display Panel, Top Units, and circuit cards indicate the kind of fault, faulty equipment, etc. when an alarm condition occurs.

3.5.3 Port Interface Module

The Port Interface Module (PIM) includes the hardware and the supervision to connect stations, terminals, and other devices to the networks. It includes an interface section, a time division switch, and a processor. There are 23 port interface slots in the port interface section. Each port interface card accommodates 8 ports, for a total of 184 ports for station and trunk circuits. Port interface cards for various types of interfaces occupy different number of ports (e.g., an interface card for a 16-line circuit occupies 16 ports or two card slots).

3.5.4 Control Processor Module

The CPM includes a main processors, which controls all switching operations in a load sharing mode and provides storage for data base information; a system processor, which supervises switching operations, faults analysis, backup memory control, and the overall man-machine interface; and a highway switch, which serves as a portion of a multistage time division switch.

3.5.5 Miscellaneous Module

The Miscellaneous Module includes alarm, maintenance, and other hardware controllers.

Working Copy

3.5.6 Maintenance Display Panel

The Maintenance Display Panel indicates system operating status, and includes alarm lamps, a buzzer, and an alarm reset button.

3.5.7 Top Unit

The Top Unit provides the mounting for the bus termination circuits, a thermostat, an alarm display panel and a fan, if required. Eight alarm indicating lamps on the Top Unit are PWR, FUSE, TEMP, CPU, SPE, RGU (ringing generator unit), HOW (howler tone signal), and PFT (power failure transfer). These lamps indicate the type of fault in a module group.

3.5.8 Fan Unit

The Fan Unit houses a fan for cooling the modules.

3.5.9 Base Unit

The Base Unit is a module platform, which is preterite for mounting the module group. It has casters, power receiving terminal, and fuses.

3.5.10 Circuit Cards

Individual circuit card to perform the desired functions are installed in the circuit board slots in the modules that make up the communications controller. There are over 20 different cards available, including nine that are for the PIM interface slots. See NEC NEAX2400 IMS MMG System Manual for a detailed listing and function of the circuit cards. Where applicable the cards are equipped with status lamps and control switches.

3.5.11 Site Telephones

Most site telephones are digital electronic multifunctional terminals. They are proprietary, intelligent microprocessor-controlled terminals called "D^{term}" instruments by NEC. These telephone sets provide a variety of services by the use of function keys.

3.5.11.1 Single-Line Instrument

A single-line instrument can access all system features via simple one- or two-digit access codes. These phones are equipped with a key pad, message waiting lamp (not used), a flash hook button (same as depressing the hook switch for a specified time), and a ringer volume control. A variety of similar one-line dial phones are in use on the site.

Working Copy

3.5.11.2 Four-Line Button Digital Instrument

A four-line button digital instrument, which can be adapted for simultaneous voice and data communications, is available.

3.5.11.3 Sixteen-Line/Feature Button Digital Instrument

A sixteen-line/feature button digital instrument has a 16-character LCD display, speaker, 20 speed call buttons (one-touch or feature) and dedicated function keys for other features, including 16 keys that may be independently programmed. It can provide simultaneous voice and data communications with the use of an adapter and the number of lines available can be expanded with a 24-line adapter.

3.5.11.4 Data Adapters and Data Modules

A Data Terminal is available that provides data station users with the capability of transmitting up to 9,600 bps asynchronous or up to 56 Kbps synchronous data.

3.5.11.5 Attendant Stations

The NEAX2400 attendant station is a compact, desk top unit with non-locking, light-touch function keys, a pushbutton dial pad and light-emitting diodes. The light-emitting diodes provide information on the status of the calls in progress. Visual indication of the busy or idle condition of the individual stations. An alphanumeric display provides station and trunk identification, class of service, time, date, and number of calls waiting. The attendant can originate, answer, hold, transfer, and re-enter call back calls and activate various service features.

3.5.12 Maintenance Administration Terminal

The maintenance administration terminal is a personal computer with a CRT, keyboard, hard disk and floppy disk drives and a peripheral printer. It is provided with an operating system, which allows for the assignment, deletion, display and printout of data and for the control, supervision, and measurement of system operations. The Basic Command programs are stored on the computer hard disk drive.

The terminal uses Digital Research CP/M-86 operating system and is connected to the communications controller with a RS232C cable.

3.5.13 Rectifier

The rectifier consists of two units connected with their DC current outputs in parallel. Each unit is capable of supplying 30 amperes to operate the

Working Copy

communications controller and to keep the batteries fully charged. As long as the telephone system load remains below a preset value, the rectifier output remains equal to the load (i.e., during normal operation the battery does not furnish load current). An equalizing mode is available if a higher voltage is required to recharge the batteries.

In the case of battery discharge or a DC overload, rectifier current is limited to a preset value. The units are also protected by a automatic output over voltage shutdown. Installation instructions and ventilation requirements are given in the Reliance Comm/Tec LORAIN Model RL30F50 Flotrol Rectifier Installation, Operation, Maintenance manual.

The following controls and indicators are located on the front door of each unit: AC input circuit breaker, Float/Equalize switch, Fuse Alarm light emitting diode (LED), Power On LED, High Voltage Alarm LED, Low Voltage Alarm LED, Low Current Alarm LED, a DC ammeter, a DC voltmeter, and pin jacks for a portable voltmeter.

Potentiometers and tap adjustments are provided to adjust the input voltage range, float voltage, equalize voltage, current limit, low voltage alarm, high voltage alarm, low current alarm, over voltage shutdown, and load sharing.

3.5.13.1 Circuit Description

The rectifier operates from 120 60 Hz power. The output of a triac circuit controlled ferroresonant power transformer is applied to a full wave diode rectifier. The resultant dc current is filtered by an RC filter circuit and applied to the negative output lead. An integrated circuit voltage regulator monitors the output of the rectifier and triggers the ac input voltage at the proper time in each cycle to produce the specified output voltage.

The rectifier includes a current limiting circuit (switches the rectifier to a current limit mode if the output current exceeds a preset value), a current walk-in circuit (prevents the rapid application of load at startup), negative load sharing circuit (allows the two rectifiers connected in parallel to share the total load in proportion to output current rating), high and low voltage alarm circuits (illuminate LEDs when an alarm condition exists), low current alarm (illuminates an LED when output current decreases to 0.5% of rated load or the rectifier is turned off), overload shutdown circuit (initiates a rectifier shutdown if the output voltage exceeds a preset value.

3.5.14 Batteries

The bank of batteries is made up of 24 individual 2 V, sealed lead-acid storage batteries connected in series to provide a -48 V output to the communications controller. The rated capacity of each battery is 780 ampere-hours at an eight-hour discharge rate to 1.75 V.

Working Copy

3.5.15 Multiplexer and Microwave Equipment

The multiplexer, microwave equipment, and the multiconductor cable connecting the site dial phone system to the telephone company is owned and maintained by the telephone company.

3.5.16 Shared Computing Resources (PC05) Wiring

The wiring provided by the Dial Phones system for local data transmission on the LAN is two-pair telephone cables.

3.6 Instrumentation and Control

Not applicable.

3.7 System Interfaces

TABLE PC II-I-1 - Dial Phones Primary Interfacing Systems

System Designator	System Title
AU00	Underground Facility & Equipment
CF00	Plant Buildings, Facilities, & Misc. Equipment
ED00	Surface Electrical System
FP00	Fire Protection System
HV00	Heating, Ventilation and Air Conditioning System
PP00	Plant Protection

TABLE PC II-I-2 - Dial Phones Secondary Interfacing Systems

System Designator	System Title
ED00	Electrical System Surface and Underground
EM00	Effluent & Environmental Monitoring
RM00	Radiation Monitoring
PC06	Emergency Operations Center

3.7.1 Electrical Power and Wiring

On-site telephone lines are provided between surface buildings and facilities and to the underground phones, service lighting, grounding, and 120 Vac, 60 Hz power is provided by the electrical system (ED00).

Working Copy

3.7.2 Space

The telephone hut and space for telephone terminal blocks in buildings and facilities is provided by Plant Buildings, Facilities, and Miscellaneous Equipment (CF00).

3.7.3 Equipment Interface Requirements

Environmental, floor space, floor load, equipment room, power supply, main distribution frame, and power and ground cable requirements and heat generation for the communications controller equipment room are given in Chapter 3 of the NEC NEAX2400 IMS MMG System Manual, Vol. 1, General Information Section.

3.7.4 Shared Computing Resources (PC05) Wiring

The dial phones system provides the building wiring between the remote data entry equipment and the Shared Computing Resources (PC05) in the computer room(s).

3.7.5 Heating, Ventilation and Air Conditioning

The Heating, Ventilation and Air Conditioning System (HV00) provides the HVAC in telephone equipment facility.

3.7.6 Underground Facility and Equipment

The Underground Facility and Equipment (AU00) provides space and mounting for dial phones.

3.7.7 Fire Protection System

The Fire Protection system (FP00) provides the fire protection for the dial phones.

3.7.8 Plant Protection System

The Plant Protection system (PP00) provides the plant protection for the dial phones.

3.7.9 The communications infrastructure for the ED00 metering system is provided by the dial phone system.

3.7.10 The communications infrastructure to assist EM00, Effluent and Environmental Monitoring, calibration at station A and the metrological station is provided by the dial phone system.

Working Copy

3.7.11 The communications infrastructure to assist RM00, Radiation Monitoring, calibration is provided by the dial phone system.

3.7.12 The Emergency Operations Center (PC06) contains an attendant console to allow control of telephone inquiries during EOC activation.

4.0 OPERATIONS

Refer to the current, approved revision of the vendor's operating manuals for information related to a PC01 system component.

5.0 SYSTEM LIMITATIONS, SETPOINTS, AND PRECAUTIONS

5.1 Limitations

The Dial Phones system communications controller in the telephone hut is designed to operate with temperatures between 41 and 86°F and the relative humidity between 15% and 65%. Failure to maintain these conditions may result in malfunction or failure of the Dial Phone system equipment.

5.2 Setpoints

The dial phones system alarms are shown on Table PC II-I-3. These alarms are local alarms in the telephone equipment building and are not transmitted to the CMR.

5.3 Precautions

In case of extended planned power interruptions to the dial phones system equipment, the portable diesel generator should be started to supply power to the system to prevent a deep cycling of the storage batteries and the shortening of battery life.

Working Copy

5.3.1 After a potentially damaging event such as an earthquake or tornado, dependent on the Carlsbad trunk lines, the microwave transceiver and multiplexer, the microwave tower, the desk top operator switchboards, the 48 V power supply system, and the communications controller may be inoperable.

TABLE PC II-I-3 - Dial Phones System

Dial Phones System Equipment Parameters	Setpoint
Telephone System Battery Local High	57.6 Vdc
Telephone System Battery Local Low	47.2 Vdc
Telephone System Low Current	0.5% of Rated Load
Telephone System Over Voltage Breaker Trip	54.9 Vdc

6.0 OFF-NORMAL EVENTS AND RECOVERY

Redundant telephone and radio systems are provided to decrease the probability of losing on-site and off-site communications. The telephone system is equipped with a backup generator for a loss of site power event.

6.1 Loss of Electrical Power

6.1.1 Loss of normal AC power to the dial phone communications controller will not affect the operation of the dial phone system. The batteries will provide power for approximately eight hours and a portable generator is available to provide power for the system indefinitely.

6.1.2 Loss of power to the communications controller will not affect the operation of the direct business lines.

6.1.3 Loss of power to the on-site telephone company multiplexer and microwave transceiver will not affect off-site dial phone service for approximately eight hours.

6.1.4 Loss of power to the on-site telephone company multiplexer and microwave transceiver will not affect off-site dial phone service.

6.2 Seismic Event or Tornado

The PC01 equipment is not specifically designed to operate during or after a design basis earthquake or during or after being exposed to the effects of a tornado.

Working Copy

6.3 System or Component Malfunction

Failure of the communications controller does not affect the direct business lines.

7.0 MAINTENANCE

Refer to Section 7.0 of Chapter G for general maintenance requirements.

7.1 Maintenance Approach

The Dial Phones system is maintained by a qualified telecommunications vendor.

7.2 Corrective maintenance

The digital communications controller and other Dial Phones system equipment in the telephone hut, the individual phone instruments, the attendant consoles on the site, and the site telephone wiring are maintained by a qualified telecommunications vendor under the maintenance contract. Maintenance of the multiplexer and microwave equipment in the GTE telephone hut and off-site communications lines are the responsibility of the telephone company.

Calibration and functional checks of the Dial Phones system equipment are not required. The communications controller diagnostic software is constantly managing the operating system. If a fault should occur, information is automatically supplied to the maintenance administration terminal, alarm panel and indicator panel. At any time, maintenance personnel can interface with the system using the maintenance administration terminal to determine overall system status.

7.3 Preventative Maintenance

Anticipatory replacement of parts is not required.

Filters in the Telephone Hut air conditioning unit are maintained in accordance with the requirements of SDD HV00. Refer to that document for frequency and procedure outline information.

The telephone system backup generator should be started and run for one hour at least quarterly.

7.4 In-Service Inspection

The use of the system provides a continual checkout and there are many communication backups to the system, so that failure does not result in an

Working Copy

unsafe situation. A program that replaces parts in anticipation of failure is not required. An in-service inspection or predicative maintenance program for anticipation of failure is not required.

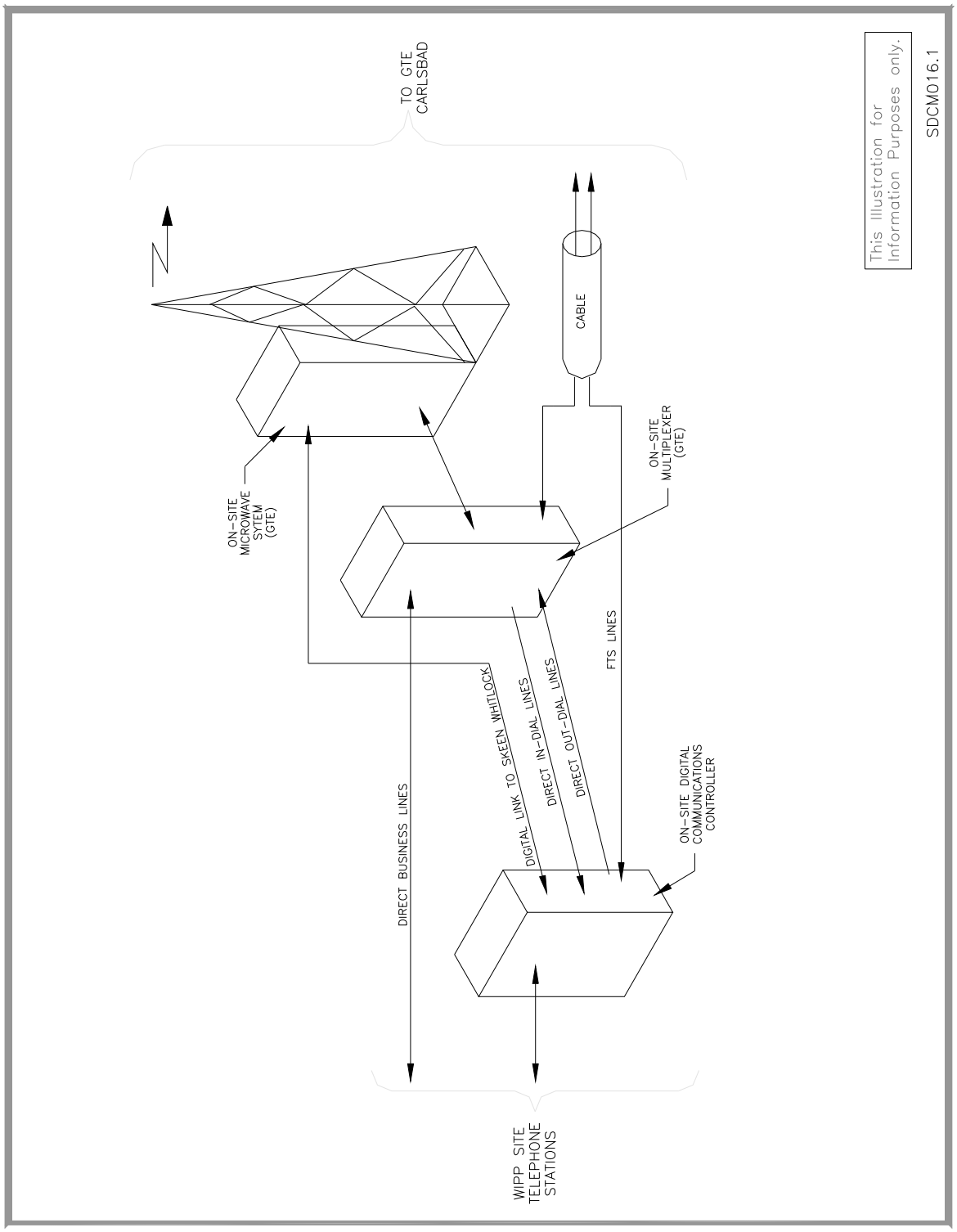

FIGURE II-I-1 Dial Phones System Diagram

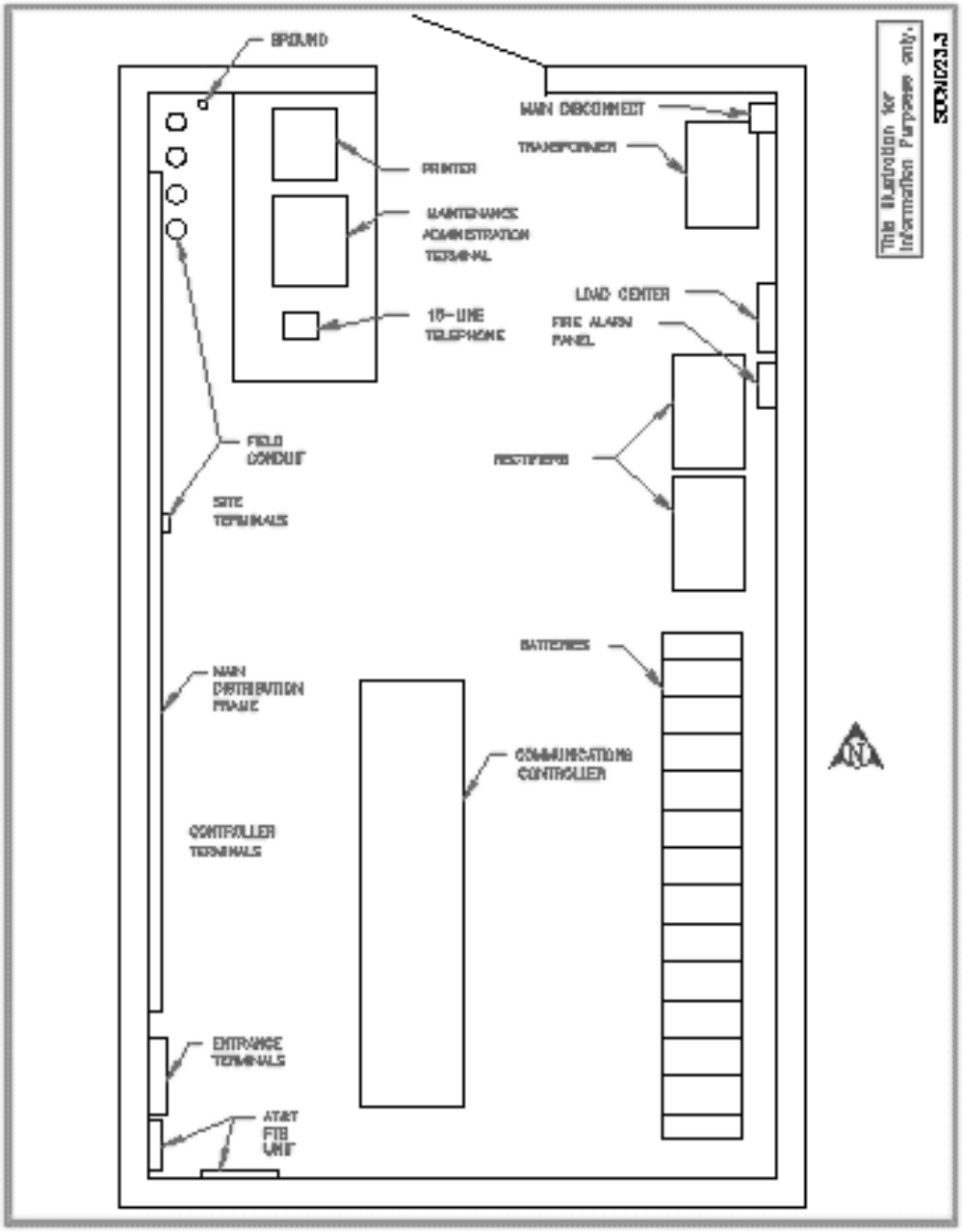

FIGURE PC II-I-2 Telephone Hut Arrangement (BLDG 468)

Working Copy

Part II, Chapter II

Subsystem PC02, Mine Pager Phones

TABLE OF CONTENTS

1.0 PRIMARY FUNCTIONS II-II-1

2.0 DESIGN REQUIREMENTS II-II-1

2.1 General II-II-1

2.2 Subsystem General Requirements II-II-1

2.3 Operational Requirements II-II-1

2.4 Structural II-II-2

2.5 General Arrangement and Essential Features II-II-2

2.6 Maintenance II-II-2

2.7 In-Service Inspection II-II-2

2.8 Instrumentation and Control II-II-2

2.9 Interfacing Systems II-II-2

2.10 Quality Assurance II-II-2

2.11 Codes and Standards II-II-2

2.12 Reliability Assurance II-II-3

3.0 DESIGN DESCRIPTION II-II-3

3.1 Summary II-II-3

3.2 Detailed System Description II-II-3

3.3 System Performance Characteristics II-II-4

3.4 System Arrangement II-II-4

3.5 Component Design Description II-II-4

3.6 Instrumentation and Control II-II-5

Working Copy

3.7 System Interfaces II-II-5

4.0 OPERATIONS II-II-6

5.0 SYSTEM LIMITATION, SETPOINTS, AND PRECAUTIONS II-II-6

6.0 OFF-NORMAL EVENTS AND RECOVERY II-II-6

6.1 Loss of Electrical Power II-II-6

6.2 Seismic Event or Tornado II-II-6

6.3 System or Component Malfunction II-II-7

7.0 MAINTENANCE II-II-7

7.1 Maintenance Approach II-II-7

7.2 Corrective Maintenance II-II-7

7.3 Preventative Maintenance II-II-7

7.4 In-Service Inspection II-II-7

Working Copy

LIST OF FIGURES

Figure Page

FIGURE PC-II-II-1 Mine Pager Phone Outline II-II-8

Working Copy

LIST OF TABLES

Table Page

TABLE PC II-II-1 - Mine Page Phones Primary Interfacing Systems II-II-5

TABLE PC II-II-2 - Mine Page Phones Secondary Interfacing Systems II-II-5

Working Copy

Chapter II-II

Subsystem PC02, Mine Pager Phones

1.0 PRIMARY FUNCTIONS

The primary function of the mine pager phones is to provide two-way communications between the underground and the surface.

2.0 DESIGN REQUIREMENTS

2.1 General

Refer to Section 2.0 of Chapter G for plant communication system general design requirements.

2.2 Subsystem General Requirements

- Two-way communications between the surface and underground operations shall be provided.

2.3 Operational Requirements

Mine Pager Phones operational requirements are as follows:

2.3.1 Each mine pager phone shall be a self-contained battery operated unit.

2.3.2 The mine phones shall operate up to a distance of 3,000 feet between units.

2.3.3 Each mine pager phone shall include a handset and a speaker.

2.3.4 The audio output of each mine pager phone shall be 10 dBA, minimum, above background at a distance of 10 feet from the phone speaker.

2.3.5 As a minimum, nine locations shall be designated to provide backup communications for emergency operations as identified in Table 6 of the WIPP Contingency Plan. These include:

- The Four Underground Assembly Areas
- The Underground Facility Shift Manager's Desk
- The Surface Facility Shift Manager's Desk
- The CMR
- The Emergency Operations Center
- The Mine Rescue Room

Working Copy

2.4 Structural

There are no special structural requirements for the Design Class IIIB equipment of the PC02 system.

2.5 General Arrangement and Essential Features

Refer to Section 2.5 of Chapter G for general structural requirements for plant monitoring and communication systems,

Mine pager phones shall be located throughout the underground, at the salt handling hoist, at the waste hoist and in the CMR and at other selected surface locations.

2.6 Maintenance

Maintenance for the PC02 subsystem equipment shall be provided in accordance with WIPP site standard work authorization (see Section 7.0)

2.7 In-Service Inspection

There are no subsystem specific in-service inspection requirements for the PC02 equipment with the exception of the RCRA required equipment. Mine page phones identified in the WIPP Contingency Plan are inspected tested monthly.

2.8 Instrumentation and Control

There are no subsystem specific instrumentation and control requirements for the PC02 equipment.

2.9 Interfacing Systems

Refer to Section 3.7 for the Interfacing Systems.

2.10 Quality Assurance

2.11 Codes and Standards

<u>American National Standard Institute Codes (ANSI)</u>

C2	National Electrical Safety Code (NESC)

<u>American Society of Mechanical Engineers</u>

NQA-1	Quality Assurance Program Requirements for Nuclear Facilities

Working Copy

U.S. Department of Energy

DOE Order 430.1	Life-Cycle Asset Management
DOE Order 420.1	Facility Safety

Federal

10 CFR 830.120	Quality Assurance
30 CFR 57	Health and Safety Standards - Metal and Nonmetallic Underground Mines (Signaling)
29 CFR 1910	Occupational Safety and Health Standards, General Industry

National Electrical Manufacturers Association (NEMA)

NEMA ICS 6-78	Enclosures for Industrial Controls and Systems, Rev. 1, Instrumentation and Control Systems

National Fire Protection Association (NFPA)

NFPA No. 70	National Electrical Code (NEC)
NFPA No. 72	National Fire Alarm Code
NFPA No. 70B	Electrical Equipment Maintenance

2.12 Reliability Assurance

There are no subsystem specific reliability assurance requirements for the PC02 equipment.

3.0 DESIGN DESCRIPTION

3.1 Summary

The Mine Pager Phones system is made up of two-way, self-contained, battery-powered speaker phones used for emergency and normal communications between the surface and underground.

3.2 Detailed System Description

Mine pager phones is a network of independent, interconnected, self-contained, battery-powered paging phones used for two-way emergency and routine communication between the underground and the surface.

Working Copy

The mine phones are interconnected on a two wire system. Each phone includes a speaker for paging and a handset for initiating pages and for normal phone communication between one or more other mine pager phones on the system. The speaker signal and the handset signal are electronically amplified at each phone.

Pressing the page switch on a mine pager phone impresses a voltage on the interconnecting phone line and activates the speaker amplifiers in the other units connected to the line. Pressing the press-to-talk switch activates the handset amplifier in the paging phone and places the voice signal on the phone line to be received, amplified and applied to the speaker of the receiving units. Releasing the page switch at the paging phone deactivates the speaker amplifier in the stations being paged.

Pressing the press-to-talk switch impresses the amplified handset voice signal of the sending phone on the line to be used by the headset receiver of the receiving phone.

3.3 System Performance Characteristics

Refer to the General Section for general system performance characteristics.

As a minimum, nine locations shall be designated to provide backup communications for emergency operations.

3.4 System Arrangement

The mine pager phones system consists of self-contained pager phone sets located throughout the underground and on the surface, as required, and interconnected by phone lines.

The mine pager phones installed in the waste handling, salt handling, and air intake shaft hoist control rooms and at the collar and underground stations provide two-way voice communications between the hoist operator and the station tender.

3.5 Component Design Description

Each mine pager phone is a stainless steel or plastic enclosure approximately 16" high by 6.5" wide by 5.5" deep and includes a handset on a coiled cord and integral paging speaker. The outline of a mine pager phone is shown on Figure PC II-II-1. The enclosure houses a printed circuit board with speaker and handset amplifiers and batteries(s). Individual volume controls are provided for the speaker and handset receiver. Each phone has a paging switch on the enclosure and a press-to-talk switch on the handset. Each phone is equipped with either one two 12 V NEDA 926, or equivalent, batteries.

Working Copy

The single battery units provide 12 Vs for either normal conversation or when paging. In the two battery units the two batteries are connected in parallel during normal conversation to equalize battery drain and in series to provide 24 Vs on the line when paging.

In operation, either a 12 or 24 V signal is impressed on the phone line when the paging switch is operated. A 12 V threshold signal activates the speaker amplifiers in the other phones connected to the mine pager phone line, allowing them to amplify the incoming audio signal from the handset microphone when the press-to-talk switch is pressed. The speaker volume at each phone may be individually adjusted at the phone. When the press-to-talk switch is pressed, the unbiased audio signal from the handset microphone is amplified and coupled to the phone line. At the receiving phone the audio signal is connected to the handset receiver through a handset volume control.

For more detailed specifications and description of the operation of the mine pager phones see the Femco Maintenance Manual for Loudspeaking Mine Telephone, 741301/401.

3.6 Instrumentation and Control

Not applicable.

3.7 System Interfaces

TABLE PC II-II-1 - Mine Page Phones Primary Interfacing Systems

System Designator	System Title
ED00	Electrical System Surface and Underground
AU00	Underground Facility & Equipment
CF00	Plant Buildings, Facilities, & Misc. Equipment
GC00	General Civil and Structural

TABLE PC II-II-2 - Mine Page Phones Secondary Interfacing Systems

System Designator	System Title
UH00	Underground Hoisting System

Working Copy

3.7.1 The Electrical System (EDOO) provides the interconnecting phone wiring for the mine pager phones underground, on the surface, and between the surface and the underground.

3.7.2 The Underground Facility and Equipment System (AU00) provides space for mounting the mine pager phones underground. The General Civil and Structural system (GC00) provides space and mounting for the mine pager phones in surface buildings and facilities.

The Confinement Facilities system (CF00) provides space and mounting for the mine pager phones in confinement areas.

3.7.3 The mine page phone system provides direct communications between the hoist control rooms and the bottom landers for the UH00 systems.

4.0 OPERATIONS

Refer to the current, approved revision of the vendor's operating manuals for information related to a PC02 system component.

5.0 SYSTEM LIMITATION, SETPOINTS, AND PRECAUTIONS

There are no limitations or setpoints for the Design Class IIIB equipment of the PC02 system.

As a precaution, after the installation of a new mine page phone, the polarity of the connection to the two wire line should be checked to assure communication with the Central Monitoring Room Operator (CMRO). The mine pager phones can not communicate with the site Public Address console and excessive battery drain will occur if the polarity is reversed.

6.0 OFF-NORMAL EVENTS AND RECOVERY

6.1 Loss of Electrical Power

Since each mine pager phone is powered by self-contained batteries, the loss of site power does not affect the availability of the mine pager phones.

6.2 Seismic Event or Tornado

The PC02 equipment is not specifically designed to operate during or after a design basis earthquake or during or after being exposed to the effects of a tornado. The equipment identified in the WIPP Contingency Plan should be functionally checked after an event to ensure proper operation. The balance of the system equipment can be checked through normal operation.

Working Copy

6.3 System or Component Malfunction

Failure of one mine pager phone does not affect the operation of the remaining phones on the system.

7.0 MAINTENANCE

7.1 Maintenance Approach

Five underground and four surface mine pager phones are identified in the WIPP Contingency Plan as a part of the safety system for mine operations. The system is tested through normal use; however, monthly operability and functional checks of the these essential mine pager phones are conducted and documented. While tests on these systems are being performed, precautions shall be taken to assure real alarms and notifications are not misinterpreted to be tests. When a malfunction is detected, the repairs shall be accomplished expeditiously.

7.2 Corrective Maintenance

Corrective Maintenance for the PC02 system is conducted in accordance with standard WIPP site work authorization procedures. These are identified in WP 10-2, Maintenance Operations Instruction Manual.

Replacement of components will usually be the replacement of a unit. Detailed procedure outlines for each of the different types of units are not necessary. Perform a satisfactory retest after each replacement to assure all affected systems function properly.

7.3 Preventative Maintenance

Anticipatory replacement of parts is not required.

7.4 In-Service Inspection

Daily use of the equipment provides a frequent inspection of the equipment. Batteries in the underground are replaced via a request to the Underground Operations Manager and on the surface via a F.I.R.S.T. request. In-service inspection or predictive maintenance program for anticipation of failure is not required.

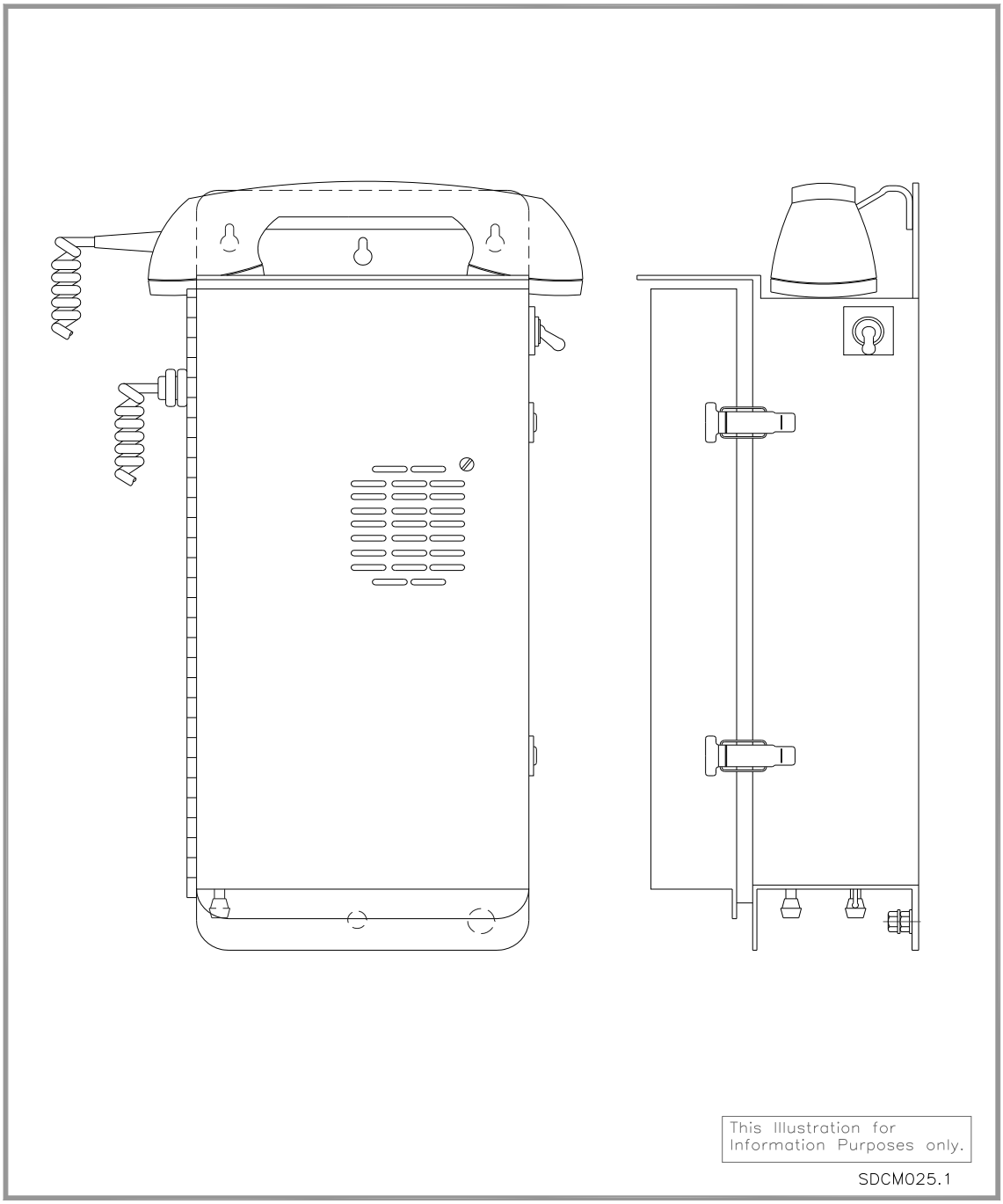

FIGURE PC-II-II-1 Mine Pager Phone Outline

Working Copy

Part II, Chapter III

Subsystem PC03, Plant Public Address (PA) and Alarm Systems

TABLE OF CONTENTS

1.0 PRIMARY FUNCTIONS II-III-1

2.0 DESIGN REQUIREMENTS II-III-1

2.1 General II-III-1

2.2 Subsystem General Requirements II-III-1

2.3 Operational Requirements II-III-1

2.4 Structural II-III-3

2.5 General Arrangement and Essential Features II-III-3

2.6 Maintenance II-III-3

2.7 In-Service Inspection II-III-3

2.8 Instrumentation and Control II-III-3

2.9 Interfacing Systems II-III-3

2.10 Quality Assurance II-III-3

2.11 Codes and Standards II-III-4

2.12 Reliability Assurance II-III-5

3.0 DESIGN DESCRIPTION II-III-5

3.1 Summary II-III-5

3.2 Detailed System Description II-III-5

3.3 System Performance Characteristics II-III-7

3.4 System Arrangement II-III-8

3.5 Component Design Description II-III-8

3.6 Instrumentation and Control II-III-11

Working Copy

3.7 System Interfaces II-III-12

4.0 OPERATIONS II-III-13

5.0 SYSTEM LIMITATIONS, SETPOINTS, AND PRECAUTIONS II-III-13

5.1 System Precautions II-III-13

6.0 OFF-NORMAL EVENTS AND RECOVERY II-III-14

6.1 Loss of Electrical Power II-III-14

6.2 Seismic Event or Tornado II-III-14

6.3 System or Component Malfunction II-III-14

7.0 MAINTENANCE II-III-14

7.1 Maintenance Approach II-III-14

7.2 Corrective Maintenance II-III-15

7.3 Preventative Maintenance II-III-15

7.4 In-Service Inspection II-III-15

LIST OF FIGURES

Figure Page

FIGURE PC II-III-1 - Evacuation Alarm Functional Block Diagram II-III-16

Working Copy

LIST OF TABLES

Table Page

TABLE PC II-III-1 - Plant PA and Alarm System Primary Interfacing Systems . . II-III-12

TABLE PC II-III-2 - Plant PA and Alarm System Secondary Interfacing Systems II-III-12

Working Copy

Chapter II-III

Subsystem PC03, Plant Public Address (PA) and Alarm Systems

1.0 PRIMARY FUNCTIONS

The primary functions of the Plant PA and Alarm Systems are as follows:

- Provides local surface and underground Public Address (PA) at locations of expected occupancy throughout the site.
- Provides a central console for broadcasting of evacuation alarms and public address announcements throughout the site from the CMR.
- Provides an audible and visual evacuation alarm function underground.

2.0 DESIGN REQUIREMENTS

2.1 General

Refer to Section 2.0 of Chapter G for plant communication system general design requirements.

2.2 Subsystem General Requirements

- Provides local surface and underground Public Address (PA) systems with submaster paging stations at locations of expected occupancy throughout the site.
- Provides a master PA station for the broadcasting of evacuation alarms and public address announcements throughout the site from the CMR.
- Provides an audible and visual evacuation alarm system underground.

2.3 Operational Requirements

Plant PA and Alarm Systems operational requirements are as follows:

2.3.1 A master PA station shall be located in the CMR.

Working Copy

2.3.2 At a minimum, the master PA system shall be connected to the PA systems in locations of expected occupancy ie:

- Support Building
- Waste Handling Building
- Underground
- Warehouse/Shops Building
- Water Pumphouse
- Exhaust Filter Building
- Guard and Security Building
- Construction and Salt Handling Shaft Head Frame
- Construction and Salt Handling Hoist House
- Safety and Emergency Building
- Engineering Building
- Training Building

2.3.3 All local PA handset locations shall have talk-back capability with handsets located at the speakers.

2.3.4 The CMR shall have the capability to page a group of buildings, identified as a zone, or all facilities.

2.3.5 A separate and distinct underground evacuation alarm, controlled from the CMR, shall be provided.

2.3.6 The evacuation alarm and other alarm signals, as required, shall be generated by a multi-tone generator in the master PA system console in the CMR.

2.3.7 The multi-tone generator alarm signals shall be transmitted over the PA system.

2.3.8 The fire evacuation alarm or other multi-tone generator alarm shall override any existing PA communication.

2.3.9 The evacuation alarm or other multi-tone generator alarm, once initiated, shall be capable of being silenced by the CMR operator, but only after it has sounded for a preset time.

2.3.10 The CMR operator shall have the capability of overriding individual PA systems.

2.3.11 The underground portion of the PA system shall be divided into the permanent areas, where specific work is being performed. Each of these areas shall be provided with a separate circuit independent of the other areas. Cross connections shall provide communication between these areas and the CMR.

Working Copy

2.4 Structural

There are no special structural requirements for the Design Class IIIB equipment of the PC03 system.

2.5 General Arrangement and Essential Features

Local Public Address (PA) system master page stations shall be located in a building lobby or central office.

The master PA system controls shall be located in the CMR.

Local PA system speakers shall be located inside surface facilities and outdoors as required to ensure that PA messages are intelligible to employees at all locations.

2.6 Maintenance

Maintenance for the PC03 subsystem equipment shall be provided in accordance with WIPP site standard work authorization procedures.

2.7 In-Service Inspection

There are no subsystem specific in-service inspection requirements for the PC03 equipment. Daily use provides in-service inspection for the public address equipment. The site emergency notification and evacuation alarms identified in the WIPP Contingency Plan are tested monthly.

2.8 Instrumentation and Control

Refer to Section 3.2.6 for subsystem specific instrumentation and control requirements for the PC03 equipment.

2.9 Interfacing Systems

Refer to Section 3.7 for the Interfacing System requirements.

2.10 Quality Assurance

There are no subsystem specific quality assurance requirements for the PC03 equipment.

Working Copy

2.11 Codes and Standards

American National Standard Institute Codes (ANSI)

C2	National Electrical Safety Code (NESC)

American Society of Mechanical Engineers

NQA-1	Quality Assurance Program Requirements for Nuclear Facilities.

U.S. Department of Energy

DOE Order 430.1	Life-Cycle Asset Management
DOE Order 420.1	Facility Safety

Electronic Industries Association (EIA)

310	Racks, Panels and Associated Equipment.

Federal

10 CFR 830.120	Quality Assurance
30 CFR 57	Health and Safety Standards - Metal and Nonmetallic Underground Mines (Signaling).
40 CFR 265	Subpart D, Contingency Plan and Emergency Procedures
EPCRA	Emergency Planning and Community Right-to-Know Act.
29 CFR 1910	Occupational Safety and Health Standards, General Industry

National Electrical Manufacturers Association (NEMA)

NEMA ICS 6-78	Enclosures for Industrial Controls and Systems, Rev. 1. Instrumentation and Control Systems.

Working Copy

National Fire Protection Association (NFPA)

NFPA No. 70	National Electrical Code (NEC).
NFPA No. 72	National Fire Alarm Code
NFPA No. 70B	Electrical Equipment Maintenance

2.12 Reliability Assurance

There are no subsystem specific reliability assurance requirements for the PC03 equipment.

3.0 DESIGN DESCRIPTION

3.1 Summary

Plant PA and Alarm Systems includes the site-wide public address installations and a separate and additional underground evacuation alarm system. The public address system master control console is located in the CMR. Submaster paging stations are located in the support building, waste handling building, water pump house, guard and security building, salt handling hoist house and head frame, exhaust filter building, safety and emergency services facility, engineering building, training building, warehouse/shops building, and underground.

3.2 Detailed System Description

Plant PA and alarm systems includes a site wide (surface and underground) public address (PA) system with page and party-line functions and a multi-tone generator for automatic and manual initiation of evacuation and alarm signals.

Plant PA and alarm systems also includes a second, independent underground evacuation signal system.

Figure C II-III-1 is a functional block diagram of the public address system.

Figure PC II-III-2 is a functional block diagram of the evacuation alarm system, which includes the surface and underground public address evacuation system and the underground evacuation signal system.

The page function of the public address system is used by the CMR operator to broadcast an evacuation tone (yelp), attention-getting gong tones, and messages over the public address system speakers.

Working Copy

The page function is also used by the remote paging stations to broadcast messages on the speakers in the individual remote paging station zone. A CMR operator page will override a page being broadcast by a remote paging station.

The party function is used for communication between the CMR and paging stations and between paging stations. The system is capable of supporting up to five party-line channels. Not all locations are wired for five channels.

The PA system consists of a master control console in the CMR and submaster paging stations, remote paging stations, and speakers located throughout the site. The underground evacuation signal system uses horns and strobe lights to supplement the PA system evacuation signal underground.

3.2.1 Site Zones

The WIPP plant PA and alarm systems site zones are as follows:

ZONE	AREA
1	Support Building
2	Waste Handling Building
3	Ancillary (water pump house, trailers, guard and security building, safety and emergency and services facility, engineering building, training building, exhaust filter building) and all other outlying areas
4	Underground
5	(Reserved for future use)
7	Mine Page Phone
8	Site Notification System

3.2.2 Master Control Console

From the master control console, the CMR operator can initiate an alarm tone, created by the multi-tone generator, and broadcast messages over the public address system, either sitewide or in a selected zone. The console also has the capability to broadcast a preselected alarm tone automatically to selected zones upon receipt of a fire or other alarm signal from remote equipment. Presently, only the underground evacuation tone (a yelp) is initiated automatically upon receipt of a fire alarm from underground.

Working Copy

Using the console handset, the CMR operator can communicate on the party line with the submaster paging and remote paging stations. The CMR operator can also interconnect the submaster party lines between zones.

3.2.3 Multi-Tone Generator

The multi-tone generator is located in the master control console. The generator can generate seven, separate, distinct tones preselected from a library of available tones. Presently only two tones are used at the WIPP. A yelp tone is used as the evacuation signal. A gong tone is used as an alert signal and is followed by a verbal message over the public address system. Either tone can be initiated manually and directed to all or selected site zones by the CMR operator. In the case of a fire underground, the evacuation signal is activated automatically by the underground fire alarm signal and broadcast on the public address speakers underground. Once activated, a tone continues until manually reset. The CMR operator can silence a generated tone from the master control console only after it has sounded for a preset time.

3.2.4 Submaster Paging Station

A submaster paging station can be used to initiate a page on all public address speakers in a building and to communicate on the building party lines and on the a party line with the CMR.

3.2.5 Remote Paging Station

Remote paging stations can initiate a page on public address speakers in their area and communicate on the building party lines.

3.2.6 Underground Evacuation Signal System

The underground evacuation signal system is separate from the public address system and includes electric horns and strobe lights. An underground evacuation signal is initiated automatically by an underground fire alarm signal via the CMS or manually by the CMR operator or from pushbuttons in the salt handling shaft hoist house and waste shaft hoist control room. The underground evacuation signal is reset from any of the three manual pushbutton stations.

3.3 System Performance Characteristics

3.3.1 The multitone generator evacuation alarm is initiated automatically by the CMS upon the receipt of an underground fire alarm signal and sounded over the underground PA and evacuation alarm systems.

Working Copy

3.3.2 The underground evacuation system alarms include yelp-tone electrically operated alarm horns, strobe lights.

3.3.3 The independent underground evacuation system alarms are initiated by the CMS simultaneously with the initiation and transmission of the multitone generator evacuation signal underground.

3.3.4 The underground and evacuation system alarm may be initiated manually from the Waste Hoist Control Room the Salt Handling Hoist House, or from the CMR.

3.3.5 Gong alarms followed by voice messages are initiated manually by the CMR operator.

3.3.6 Evacuation alarms may be silenced by the CMR operator only after having sounded for a preset time.

3.4 System Arrangement

The plant PA and alarm systems consists of a master control console in the CMR and remote paging stations and speakers located throughout the site, including underground. The master control console is interfaced to the mine page phone system (PC02) and the Site Notification System (PC04) as separate zones to simplify site emergency notification announcements. PC03 also includes a separate underground evacuation warning system consisting of horns and strobe lights located underground.

3.5 Component Design Description

3.5.1 Master Control Console

The master control console is a free-standing unit that houses the multi-tone generator, handset/speaker amplifier, switching relays, power supply and has a master desktop subset with a handset, controls, and indicators. Termination points for field wiring are provided through the front panel of the enclosure.

The console controls page and party line communications to the six site zones. Lifting the console handset connects the station amplifier in the console to a switching bus. Zone page switches direct public address messages and the tone generator output to the zone or zones as selected by the CMR operator. Zone switches allow the CMR operator to select a party line to each of the site PA system zones.

Working Copy

The front panel of the master control console includes the following components:

- Handset (with integral pushbutton): For making announcements and paging on the public address system speakers and for party line communications.

- Sonalert: Audio indication to alert the CMR operator that a submaster is paging the CMR.

- EVACUATION indicator light/ pushbutton switch: Activates the evacuation (yelp) tone. Indicates that the evacuation (yelp) tone has been activated (part of the EVAC pushbutton switch).

- INTRO indicator light/pushbutton switch: Activates the intro (gong) tone.

- U/G Evacuation Warning System switch with RESET position: Sounds the underground evacuation warning system. Rotate to reset warning system.

- ZONE PAGE/TALK switches/indicator lights: indicates which site zone to be selected for paging or evacuation tones/alarms to be broadcast. Select zone submaster for party line communication. Indicates submaster originating a paging call to the master control console.

- CLEAR switch: Resets the tone generator.

- ALL-CALL switch: Selects all page zones.

- RESET switch: Resets the zone relays.

3.5.2 Multitone Generator

The multitone generator is capable of generating seven separate tones. The tones are preselected from a library of available tones by the installation specified components in the tone generator circuits. Each tone can be activated on a priority basis (i.e., the highest priority alarm will override a lower priority alarm). The selection of tone priority is accomplished by setting DIP switches in the tone generator. Using less than the available seven tones is accomplished by connecting only to the desired tones. The tone generator operates from 120-V UPS power. It can also be operated from a 24-Vdc source or with a combination of 120-Vac and 24 Vdc. Each tone is initiated manually from a the master control console or automatically from an external alarm signal. Once activated by a momentary contact closure the tone continues until the generator circuit is reset. Reset of the tone is accomplished manually from the master control console.

Working Copy

The latching feature can be defeated by placing a jumper across the reset input. The loudness of the alarm tone broadcast over the public address system speakers is adjustable at the master control console. A muting feature is available to reduce the level of the output of the tone generator while a public address message is being broadcast. Internal controls are available to adjust muted level, steady tone frequency and output level.

The electronic multi-tone generator is a plug-in unit. The audio output circuit is a transformer output isolated from ground. Twenty four-volt outputs are provided to operate devices such as indicating lights and relays.

3.5.3 Line Balance Function

The line balance assembly is used to properly load the page and party line circuits to reduce feedback and prevent system oscillation and reduce cross talk, distortion, and side tone (the speaker hearing his own voice in the earpiece of the handset). This places 33 ohms across each party line circuit and an adjustable load across each page circuit.

The multi-tone generator is included in the PA and Intercom System O&M Manual under section publication 42004-070F.

3.5.4 Paging Stations

Each paging station includes a handset, handset/speaker amplifier. Multiparty stations also include a party line rotary selector switch.

The station handset includes a PUSH TO PAGE switch that mutes the paging speaker(s) connected to the station to prevent acoustic feedback in the handset microphone. The muting feature may be defeated by moving one wire connection inside the paging station enclosure. The handset is operated by an electronic hang-up hook with no moving parts.

A plug-in dual amplifier in each station provides the power for the handset and the paging speakers. The two amplifiers are separate and each has its own power supply. The handset amplifier amplifies the dynamic microphone in the handset to drive the page or party line. The speaker amplifier provides 12 watts of audio power for the public address speakers. A screwdriver adjustment for speaker volume level is provided under the amplifier nameplate. Each amplifier also has internal receiver volume and side-tone controls.

Each station is housed in a gasketed, 16-gauge steel enclosure.

3.5.5 Interconnecting Wiring

All stations are wired in parallel using twisted-pair multiconductor cable.

Working Copy

3.5.6 Speaker Amplifier Stations

Speaker amplifier stations consist of an enclosure and a plug-in speaker amplifier. The amplifier output is 12 watts, minimum. Outputs are provided for 8 ohm and 16 ohm loads.

3.5.7 Speakers

Four types of speakers are used in the PA system: cone type ceiling mounted, cone type wall mounted, low power horn, and high power horn. Ceiling speakers are mounted flush with the ceiling. Wall speakers are mounted in wood-grain cabinets with an integral volume control. Small horns include internal drivers. Large horns have separately mounted drivers. The speakers have either eight or 16 ohms impedance. Cone speakers provide low cost voice reproduction in relatively quiet areas. Horn speakers have high effluences and are used in high noise areas. The larger horn speakers with narrow dispersion angles can be precisely oriented to minimize reverberation.

3.5.8 Isolation Amplifiers

Isolation amplifiers are one-way amplifiers that allow pages from the master control console to the paging stations and prevent zone pages from being transmitted back to the master control console. They are also installed to prevent pages between facilities in the same zone.

3.5.9 Horns and Strobe Lights

The underground evacuation signal system horns and strobe lights are self-contained units that operate on 120 Vac supplied by the electrical system.

The electric horns have spun aluminum cones and projectors. The dust and moisture proof amplifier housing of each is made of die-cast aluminum and contains amplification circuitry, a tone module, and a gain control. Maximum output is 110 dBA at 10 feet.

The strobe warning lights are double flash modules that produce 1,200 effective candlepower. Each unit contains a strobe power supply in the base of the light. The strobe flash tube is mounted in an eight-pin octal socket base. The lens is made of polycarbonate.

3.6 Instrumentation and Control

Not applicable.

3.7 System Interfaces

TABLE PC II-III-1 - Plant PA and Alarm System Primary Interfacing Systems

System Designator	System Title
AU00	Underground Facility & Equipment
CF00	Plant Buildings, Facilities, & Misc. Equipment
ED00	Surface Electrical System
FP00	Fire Protection System
GC00	General Civil and Structural
HV00	Heating, Ventilation and Air Conditioning System
PP00	Plant Protection
CM00	Central Monitoring System

TABLE PC II-III-2 - Plant PA and Alarm System Secondary Interfacing Systems

System Designator	System Title
ED00	Electrical System Surface and Underground
CM00	Central Monitoring System
FP00	Fire Protection System

3.7.1 Power

120 Vac, 60 Hz uninterruptible power is supplied to the public address system by the Electrical System (ED00) in the Waste Handling Building and in selected areas of the Support Building. Remote paging stations and the underground evacuation alarm system components are supplied with normal 120-Vac power.

3.7.2 Central Monitoring System

The CMS provides the interface between fire detection system and the master control console in the CMR and between the master control console and the underground evacuation alarm system for manual initiation of the underground evacuation alarm system. It also automatically initiates the underground evacuation alarm system upon receipt of an underground fire alarm signal.

3.7.3 Wiring

The Electrical System (ED00) provides interconnections between the plant PA and alarm systems components and between the plant PA and alarm system and the CMS.

Working Copy

3.7.4 Location and Mounting

The Confinement Facilities (CF00) provides space and mounting for public address and alarm system components.

The General Civil and Structural System (GC00) provides the facilities to locate the public address and alarm system components.

3.7.5 Underground Facility and Equipment

The Underground Facility and Equipment (AU00) provide space and mounting for the public address and alarm system components

3.7.6 Fire Protection System

The Fire Protection System (FP00) provides the fire protection for the public address and alarm system components.

3.7.7 Plant Protection System

The Plant Protection System (PP00) provides the antitheft plant protection for the public address and alarm system components. All components are located within the fenced area.

3.7.8 Heating Ventilation and Air Conditioning

The Heating, Ventilation and Air Conditioning System (HV00) provides the HVAC for the public address and alarm system components.

4.0 OPERATIONS

The Public Address Console operation is controlled via WP 04-CM1301, Public Address Console Operation. Refer to the current, approved revision of the vendor's operating manuals for information related to a PC03 system component.

5.0 SYSTEM LIMITATIONS, SETPOINTS, AND PRECAUTIONS

5.1 System Precautions

After a potentially damaging event such as an earthquake or tornado, dependance on the multi-tone generator, amplifiers and speakers in all zones, the fire alarm system, the submaster paging stations, the remote paging stations, and the underground evacuation signal system should be subject to question until the equipment is functionally checked to identify what problems exist.

Battery back-up power is not available for the system except for the master control console. Upon the loss of all AC power to the site or portions of the site, parts of this system may not function. Normal operation must not be assumed until the area affected by the power outage is functionally verified.

6.0 OFF-NORMAL EVENTS AND RECOVERY

6.1 Loss of Electrical Power

The master control console in the CMR is powered from the Electrical System UPS in the support building. The public address system submaster paging stations and speakers and the underground evacuation system, except for the functions provided by the CMS LPUs, are powered by normal AC power.

6.2 Seismic Event or Tornado

The equipment covered by this SDD is not specifically designed to operate during or after a design basis earthquake or during or after being exposed to the effects of a tornado.

6.3 System or Component Malfunction

Failure of a submaster paging station does not affect the operation of the remaining parts of the system.

7.0 MAINTENANCE

7.1 Maintenance Approach

The system is tested through normal use, however, monthly operability and functional checks of the public address system is conducted and documented. While tests on these systems are being performed, precautions shall be taken to assure real alarms and notifications are not misinterpreted to be tests.

Facility office wardens are contacted after the monthly test by the Emergency Services Coordinator to evaluate the announcement quality. When a malfunction is detected, the repairs shall be accomplished expeditiously.

After any repair that effects the PA console, in addition to testing that the stations operate properly, the different alarms shall be tested to check that the alarm generator is functioning, and to familiarize personnel with the different alarms.

Working Copy

7.2 Corrective Maintenance

Corrective Maintenance for the PC03 system is conducted in accordance with standard WIPP site work authorization procedures identified in WP 10-2, Maintenance Operations Instruction Manual.

Replacement of components will usually be the replacement of a complete GAI-Tronics component. Detailed procedure outlines for each of the different types of units are not necessary. Perform a satisfactory retest after each replacement to assure all affected systems function properly.

7.3 Preventative Maintenance

Anticipatory replacement of parts is not required.

7.4 In-Service Inspection

Daily use of the equipment provides a frequent inspection of the equipment. An in-service inspection or predictive maintenance program for anticipation of failure is not required.

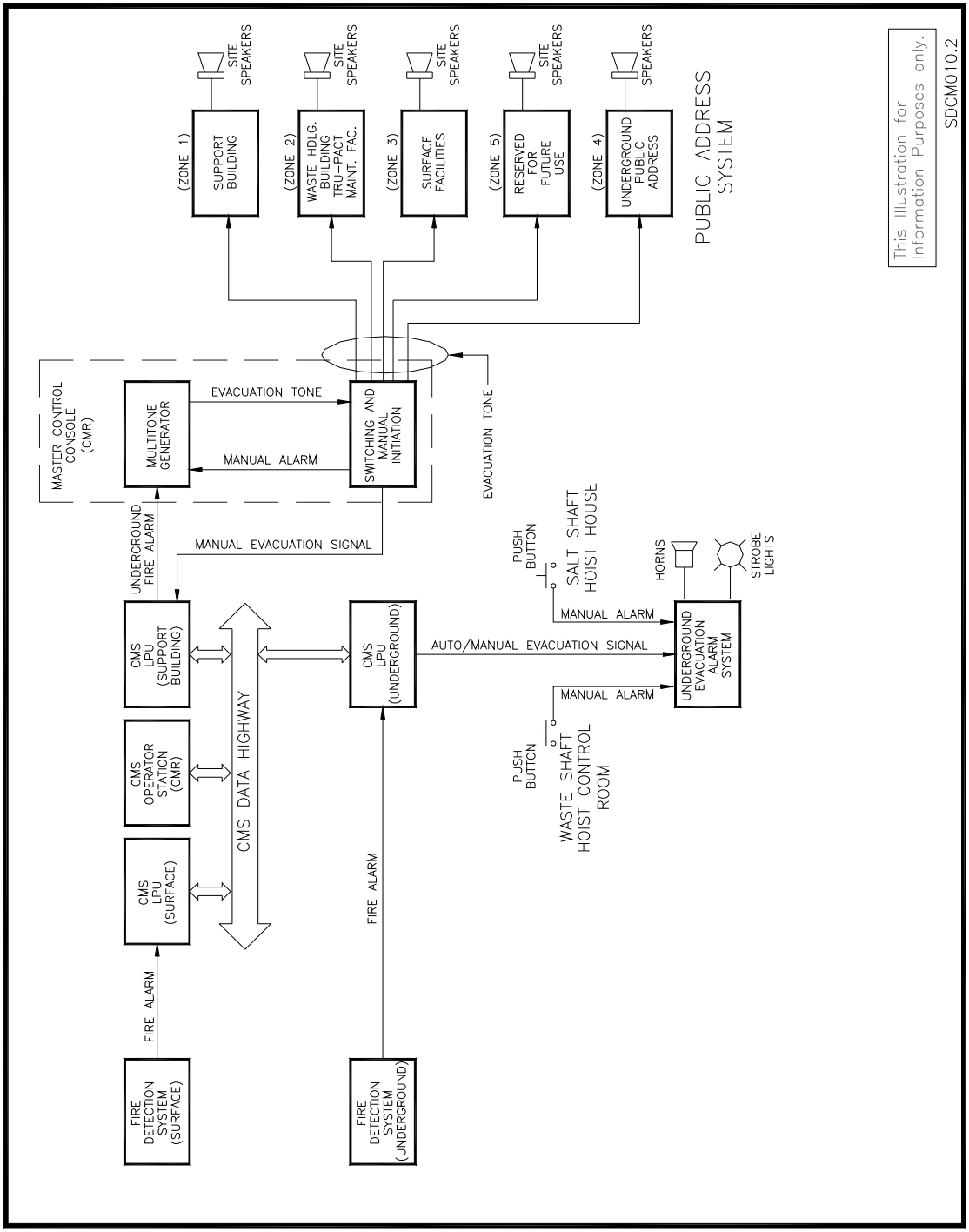

FIGURE PC II-III-1 - Evacuation Alarm Functional Block Diagram

Working Copy

Part II, Chapter IV

Subsystem PC04, Radio and Other

TABLE OF CONTENTS

1.0 PRIMARY FUNCTIONS II-IV-1

1.1 Radio and Other (PC04) II-IV-1

2.0 DESIGN REQUIREMENTS II-IV-1

2.1 General II-IV-1

2.2 Subsystem General Requirement II-IV-1

2.3 Operational Requirements II-IV-2

2.4 Structural II-IV-2

2.5 General Arrangement and Essential Features II-IV-2

2.6 Maintenance II-IV-2

2.7 In-Service Inspection II-IV-3

2.8 Instrumentation and Control II-IV-3

2.9 Interfacing Systems II-IV-3

2.10 Quality Assurance II-IV-3

2.11 Codes and Standards II-IV-3

2.12 Reliability Assurance II-IV-4

3.0 DESIGN DESCRIPTION II-IV-4

3.1 Summary II-IV-4

3.2 Detailed System Description II-IV-5

3.3 System Performance Characteristics II-IV-7

3.4 System Arrangement II-IV-7

3.5 Component Design Description II-IV-8

Working Copy

3.6 Instrumentation and Control II-IV-10

3.7 System Interfaces II-IV-10

4.0 OPERATIONS II-IV-12

5.0 SYSTEM LIMITATIONS, SETPOINTS, AND PRECAUTIONS II-IV-12

6.0 OFF-NORMAL EVENTS AND RECOVERY II-IV-12

6.1 Loss of Electrical Power II-IV-12

6.2 Seismic Event or Tornado II-IV-12

7.0 MAINTENANCE II-IV-13

7.1 Corrective Maintenance II-IV-13

7.2 Preventative Maintenance II-IV-13

7.3 In-Service Inspection II-IV-13

Working Copy

LIST OF FIGURES

Figure Page

FIGURE II-IV-1 Radio System Diagram II-IV-14

FIGURE II-IV-2 Hoist Radio System Diagram II-IV-15

Working Copy

LIST OF TABLES

Table Page

TABLE PC II-IV-1 - Radio and Other System Primary Interfacing Systems II-IV-10

TABLE PC II-IV-2 - Radio and Other System Secondary Interfacing Systems . . II-IV-10

Working Copy

Chapter II-IV

Subsystem PC04, Radio and Other

1.0 PRIMARY FUNCTIONS

1.1 Radio and Other (PC04)

The primary functions of the radio system are as follows:

- Provides radio communication between the CMR and surface vehicles.
- Provides radio communications with agencies designated by DOE.
- Provides radio communications with local law enforcement agencies.
- Provides radio communications with site emergency response teams.
- Provides battery-powered radio for two-way communications between the hoist and the hoist control room and the CMR.
- Provides radio communications between the CMR and roving watch, health physics, electrical and maintenance personnel.
- Provides radio based notification between the CMR and WIPP Site facilities located in areas where hardwired emergency notification communications equipment is not available.
- Provides radio communication between the surface and underground (U/G) and within the U/G.

2.0 DESIGN REQUIREMENTS

2.1 General

The PC04 system includes hardware to support all broadcast radio communications, paging systems, transmitted emergency notification equipment, and cellular telephone services.

2.2 Subsystem General Requirement

- A two-way radio system for on-site and off-site communications shall be provided.
- A two-way radio site emergency notification system for various on-site locations, not hardwired to the public address system, shall be provided.

Working Copy

2.3 Operational Requirements

2.3.1 Two-way radio shall provide mobile and portable two-way communications between the CMR, mobile units, security guards and other site personnel.

2.3.2 Transceivers shall be provided to maintain communications with off-site fire, law enforcement agencies, and AEOC.

2.3.3 Two-way radios shall be provided for maintaining contact with agencies designated by DOE.

2.3.4 Frequencies shall be provided to support the following radio communications networks:

- security network
- surface operations networks
- environmental safety and health network
- waste handling operations network
- emergency operations center network
- fire/rescue/general operations network
- paging network
- radiological assistance team network
- communications group
- underground operations network

2.3.5 Battery-powered FM transmitter/receivers shall be provided for two-way communication between the hoist, hoist control room, and CMR for the waste shaft and salt handling shaft hoists.

2.4 Structural

There are no special structural requirements for the Design Class IIIB equipment of the PC04 system.

2.5 General Arrangement and Essential Features

The radio communications system master consoles shall be located in the CMR, security building, and EOC.

2.6 Maintenance

Maintenance for the PC04 subsystem equipment shall be provided by a contract with a qualified radio communications vendor.

Working Copy

2.7 In-Service Inspection

There are no subsystem specific in-service inspection requirements for the PC04 equipment.

2.8 Instrumentation and Control

There are no subsystem specific instrumentation and control requirements for the PC04 equipment.

2.9 Interfacing Systems

Refer to Section 3.7 for the Interfacing Systems requirements.

2.10 Quality Assurance

There are no subsystem specific quality assurance requirements for the PC04 equipment.

2.11 Codes and Standards

American National Standard Institute Codes (ANSI)

C2	National Electrical Safety Code (NESC)

American Society of Mechanical Engineers

NQA-1	Quality Assurance Program Requirements for Nuclear Facilities.

U.S. Department of Energy

DOE Order 430.1	Life-Cycle Asset Management
DOE Order 420.1	Facility Safety
Draft	"Wireless Telecommunications Services Procedural Guide"

Electronic Industries Association (EIA)

310	Racks, Panels and Associated Equipment.

Working Copy

Federal

10 CFR 830.120	Quality Assurance
30 CFR 57	Health and Safety Standards - Metal and Nonmetallic Underground Mines (Signaling).
40 CFR 265	Subpart D, Contingency Plan and Emergency Procedures
EPCRA	Emergency Planning and Community Right-to-Know Act.
29 CFR 1910	Occupational Safety and Health Standard, General Industry

National Electrical Manufacturers Association (NEMA)

NEMA ICS 6-78	Enclosures for Industrial Controls and Systems, Rev. 1. Instrumentation and Control Systems.

National Fire Protection Association (NFPA)

NFPA No. 70	National Electrical Code (NEC).
NFPA No. 72	National Fire Alarm Code
NFPA No. 70B	Electrical Equipment Maintenance

2.12 Reliability Assurance

There are no subsystem specific reliability assurance requirements for the PC04 equipment. However, the two-way radios used by site personnel are a part of an extensive radio communications system. A single failure does not significantly impact operation of the system.

3.0 DESIGN DESCRIPTION

3.1 Summary

Radio and Other includes two-way and paging on-site and off-site radio systems. These systems include base stations in the CMR, security control room, and emergency operations center, and mobile and portable units. Also included is an encrypted radio system. FM transmitters and receivers, using the hoist rope as an antenna, provide two-way communications between the hoist operator in the hoist control rooms and the salt and waste handling hoist cages. Programmable Logic Controllers (PLC) and radio modems are used

for monitoring conveyance conditions and for control of the waste handling hoist from the cage for special activities.

3.2 Detailed System Description

The Radio and Other system includes on-site radio, off-site radio, a radio paging system, an encryptable radio system, cellular telephones, and the hoist radios.

Figure PC II-IV-1 is a diagram of the on-site radio and off-site radio system. Figure PC II-IV-2 is a diagram of the hoist radio system.

3.2.1 On-Site Radio

The on-site radios provide for two-way voice communications between base station, hand-held, and mobile radios on and about the site.

3.2.2 On-Site Base Stations

On-site base stations operate on frequencies assigned by the U.S. Department of Commerce, National Telecommunications and Information Administration.

3.2.3 Hand-Held Radios

Hand-held radios provide two-way radio communications over the entire site on the same channels as the on-site base stations for use by emergency, security, maintenance, operations and general personnel.

3.2.4 Mobile Radios

Mobile radios provide two-way radio communications on-site and off-site between emergency and security vehicles and the on-site base stations on the same channels as the on-site base stations.

Working Copy

3.2.5 Base Stations for Off-Site Communications

Base stations located in the Guard and Security Building and the EOC are primarily used for off-site communications and the one base station located at the AEOC, operate on three channels on frequencies assigned by the U.S. Department of Commerce, National Telecommunications and Information Administration for the following activities:

Frequency	Activity
154.3100 MHZ	Eddy County Fire Districts
155.9100 MHZ	Carlsbad Police Department
156.0300 MHZ	Eddy County Sheriff's Office

3.2.6 Data Encryption Standard (DES) Radio System

The scrambling of DES radio system messages prevents eavesdropping on the plant protective force officers or Radiological Assistance Team activities during an emergency. The system consists of a base station and handheld radios.

3.2.7 Paging

The site paging system operates on one radio frequency. Paging messages are broadcast from a paging transmitter located on-site and simulcast on a transmitter located in Carlsbad. The system provides for selectively paging individuals or groups of individuals equipped with personal portable pagers or area FM receivers, such as, security inspectors, personnel on-call, office wardens and personnel not within hearing range of the public address system speakers.

3.2.8 Cellular Telephones

The site is served by a commercial cellular telephone system. The cellular telephones operate the same function as conventional telephones, except each phone is portable and transmits voice individually by radio. These phones provide an alternate means of on-site and off-site two-way voice communications for abnormal events or conditions, such as emergency operations, occurrence reporting, TRUPACT II transport incidences, and emergency response activities.

There are approximately 50 cellular phones used by WIPP personnel on-site and off-site. These phones operate independent from the PAX system.

Cell phones are not used where secure message transmission is necessary.

3.2.9 Hoist Radio

A wireless, medium frequency FM radio system provides two-way voice communication between the hoist control room and the shaft conveyance (cage) in the waste handling and salt handling shafts. PLCs and radio modems provide for control of the movement of the waste handling shaft hoist from the cage for special activities such as shaft inspection and maintenance. The voice radio system uses the hoist rope as a signal path (antenna), and the radio modems use antennae mounted on the cage and at the hoist tower on the surface.

A press-to-talk foot switch, microphone, and speaker at the master control station in the hoist control room allows the hoist operator to communicate with personnel on the cage. Communications are via a transceiver in the hoist control room, a signal coupler located in the hoist tower, the hoist rope, a signal coupler located on the hoist rope near the cage and the transceiver, microphone and speaker or handset in the cage. The cage transceiver is powered from a 12 V storage battery on the cage and the hoist control room transceiver is powered by 120 Vac power.

A set of pushbuttons on the transceiver panel in the waste handling cage allows jog-up, jog-down, start and emergency stop control of the cage for special activities when it is advantageous to control the hoist from the cage. For greater flexibility a plug-in pendant station with a 20 foot cable is also available for controlling the hoist from the waste handling cage. In addition, the PLC monitors the voltage of the radio system batteries and provides indications for Car On Conveyance, Car In Position and Pin In Place to the operator control panel in the hoist control room.

3.3 System Performance Characteristics

Refer to Section 3.3 of Chapter G for plant communications system performance characteristics and requirements.

3.4 System Arrangement

3.4.1 Base Stations

The WIPP radio communications system consists of nine radio networks. Base station units are located in the CMR, SCR, and the EOC communications room of building 452.

3.4.2 Mobile and Portable

Mobile radios are installed in security, emergency response and other selected vehicles. Portable radios are provided for security response team,

surface operations, fire rescue, waste handling, maintenance, and ES&H personnel as required.

3.4.3 Hoist Radio

The two-way hoist radio transceivers are located in the salt handling and waste handling cages and in the salt handling hoist house and waste handling hoist control room.

The waste hoist cage transceiver enclosure includes a PLC and radio modem for control of the hoist from the cage. A matching PLC and radio modem are housed in a separate enclosure in the hoist control room and interfaces with the hoist control system. Twelve volt battery power is provided in each hoist cage to power the cage transceiver. The transceivers in the hoist control rooms are powered from the 120-V distribution system.

The input/output signal of the voice transceiver in the cage is connected to a rope signal coupler attached to the hoist rope (rope #1 on the waste handling hoist) near the cage. The hoist control room transceiver input/output is connected to a hoist signal coupler that is mounted around the hoist cable on the head frame. Conveyance and tower mounted antennae are used to transmit and receive the hoist control signals on the waste handling hoist.

The hoist control room transceiver has a separately mounted gooseneck microphone mounted in a location at the master control station for no-hands operation by the hoist operator. The transceiver speaker and a push-to-talk foot switch are located at the master control station. A battery charger for cage transceiver batteries is also located at the surface level.

The waste handling cage transceiver has an integral speaker and hand-held microphone with a push-to-talk switch and the salt handling cage transceiver has a plug-in handset with a push-to talk switch. The waste handling hoist cage transceiver enclosure includes a four button control station and a switch to select the integral control buttons or the plug-in pendant control. Twelve volt storage battery boxes are provided for radio power.

3.5 Component Design Description

3.5.1 Two-Way Radios

On-site and off-site base stations and portable and mobile radios are VHF FM electronically synthesized frequency multichannel units.

3.5.2 Data Encryption Standard (DES) Radio System

The data encryption standard radio system includes handheld radios, base station, antenna and keyloaders for encrypting the radios.

3.5.3 Hoist Radio

3.5.3.1 Hoist Control Room Transceivers

The frequency modulated RF carrier transceivers accept an input from a dynamic microphone and provide an output audio output to a 16 ohm speaker. The transceivers are a manual-simplex system. When the microphone switch is pressed to talk the transmitter is activated and the receiver is silenced. An adjustable squelch circuit silences the speaker when the incoming signal is not sufficient to overcome the noise.

The system operates on 12 Vdc in the hoist control rooms the transceivers 12-V supplies are powered from the 120-V line.

3.5.3.2 Cage Transceiver

The voice receiver and transmitter circuits in the salt hoist cage are identical to the hoist control room transceiver circuits. The circuit enclosure includes a speaker and a hand-held microphone (handset with a push to talk switch).

In the waste handling cage the voice transmitter and receiver circuits are housed in an enclosure which also includes the PLC and radio modem, hoist control buttons, a switch to select the integral or pendant control station, the speaker, a hand-held microphone and a connector for the pendant controller.

The hoist control in the cage consists of a PLC and radio modem.

Cage transceivers and the Waste Hoist PLC and radio modem are powered by separately mounted 12 V storage batteries.

3.5.3.3 Pendant Station

The pendant control is a four-button control station that includes 20 feet of cable and plugs into the cage transceiver enclosure.

3.5.3.4 Waste Handling Hoist Control Room Receiver Enclosure

A 36-by-24-by-8-inch cabinet in the waste handling hoist control room is the interface between the hoist control buttons on the waste handling hoist cage and the hoist controller in the hoist control room. It houses a PLC, a radio modem, and terminal boards.

3.5.3.5 Hoist Control Room Speakers

The hoist control room speakers are mounted separate from the transceiver and connected to the transceiver and the microphone by cable/connector assemblies. Speaker volume is controlled by a knob on the speaker housing.

3.5.3.6 Hoist Control Room Microphone

The microphones in the hoist control rooms are mounted separately from the transceivers on a gooseneck at the master control consoles.

3.5.3.7 Cage Signal Couplers

The cage signal couplers are epoxy encapsulated, split inductive core and capacitor circuit assemblies, which are tightly clamped around the hoist rope near the cage. The circuits are tuned to the proper frequency by the proper selection of capacitors prior to encapsulation.

3.5.3.8 Hoist Signal Coupler

The hoist signal coupler is similar to the cage signal coupler, except it is attached to the hoist head frame so that it surrounds, but is not touched by, the hoist rope.

3.5.3.9 Cage Battery Holder

A enclosure for the battery to power the cage voice transceiver and hoist control transmitter is installed on each cage.

3.6 Instrumentation and Control

Not applicable.

3.7 System Interfaces

TABLE PC II-IV-1 - Radio and Other System Primary Interfacing Systems

System Designator	System Title
CF00	Plant Buildings, Facilities, & Misc. Equipment
ED00	Surface Electrical System
GC00	General Civil and Structural
HV00	Heating, Ventilation and Air Conditioning System
PP00	Plant Protection
PC06	Emergency Operations Center

TABLE PC II-IV-2 - Radio and Other System Secondary Interfacing Systems

System Designator	System Title
PC06	Emergency Operations Center

Working Copy

3.7.1 Base Stations

The CMR base station console is powered from the electrical distribution system main uninterruptible power source in the support building.

The EOC base station is powered from the (PC06) uninterruptible power source in the communications room of the EOC, which is powered with normal 120 Vac, 60 Hz power from the electrical distribution system (ED00).

The security control room off-site base stations and base station consoles are powered from 120 V AC, 60 Hz power from the electrical distribution system (ED00).

3.7.2 Hoist Radio

The two-way hoist radio system uses the hoist rope to transmit voice communications and waste handling hoist control signals between the cage and the hoist control room. The signal couplers are attached to the hoist rope near the cage and near the hoist rope on the head frame.

The hoist control room transceivers and battery chargers for the transceivers on the hoist cages are powered from the normal 120 Vac, 60 Hz line (ED00).

3.7.3 Location and Mounting

The Confinement Facilities (CF00) provides space and mounting for radio and other system components.

The General Civil and Structural System (GC00) provides the facilities to locate the radio and other system components.

3.7.4 Fire Protection System

The Fire Protection System (FP00) provides the fire protection for the radio and other system components.

3.7.5 Plant Protection System

The Plant Protection System (PP00) provides the plant protection for the radio and other system components.

3.7.6 Heating Ventilation and Air Conditioning

The Heating, Ventilation and Air Conditioning System (HV00) provides the HVAC for the radio and other system components.

Working Copy

4.0 OPERATIONS

There are no WIPP specific operating procedures for the radio systems. Refer to the current, approved revision of the vendor's operating manuals for information related to a PC04 system component operation.

5.0 SYSTEM LIMITATIONS, SETPOINTS, AND PRECAUTIONS

Not applicable.

6.0 OFF-NORMAL EVENTS AND RECOVERY

The PC04 equipment covered by this SDD is not specifically designed to operate during or after design basis off-normal events. The following sections describe the behavior of selected equipment during off-normal events.

6.1 Loss of Electrical Power

The radio base station in the CMR is powered from the Electrical System UPS in the support building and will operate for at least 30 minutes following the loss of normal AC power.

The radio base station in the EOC are powered from the EOC UPS and will operate for 10 minutes or longer following the loss of normal AC power, depending upon the level of power usage in the EOC.

The on-site radio base station console in the Security Control Room is powered from normal 120 Vac supplied by the Electrical System and backed-up by a UPS. The off-site base station is supplied with normal 120 Vac power from the Electrical System.

The salt hoist and waste hoist radio transceivers in the salt shaft hoist house and the waste shaft hoist control room have battery backup and will remain operable upon loss of AC power.

The base station transmitters and combiner located in the equipment shelter at the base of the 150' tower are supplied with normal 120 Vac power from the site Electrical System.

6.2 Seismic Event or Tornado

The PC04 equipment covered by this SDD is not specifically designed to operate during or after a design basis earthquake or during or after being exposed to the effects of a tornado. The equipment should be functionally checked after an event to ensure proper operation. This can be checked through normal operation.

7.0 MAINTENANCE

Periodic operability checks of the Radio and other system equipment is made during regular use.

Radio transmission devices require periodic verification by qualified personnel that the transmission frequency is within the allowable variation. This verification shall be accomplished at least annually on the WIPP site radio equipment.

A radio check with off-site law enforcement agencies, on all available frequencies shall be performed as deemed necessary by WIPP Security Inspector or the off-site law enforcement agencies.

Operation of the encrypted radio system shall be tested as deemed necessary by the Site Emergency Coordinator or his designee.

It may be necessary to adjust the noise sensitivity of the salt shaft hoist house or waste shaft hoist control room voice transceiver in accordance with the vendor installation manual.

7.1 Corrective Maintenance

The radio system is maintained by a knowledgeable vendor under control of a repair order contract issued for the specific component at the time of failure. Additionally, spare base stations exist to change out a failed base station.

Most components in the hoist radio transceivers are mounted on circuit boards. Troubleshooting and repair are accomplished by substitution and replacement of the circuit boards. Repair of the hoist radio units shall be in accordance with the vendor maintenance manual.

7.2 Preventative Maintenance

Scheduled service and anticipatory replacement of parts is not required.

7.3 In-Service Inspection

Daily use of the radio hardware provides a frequent inspection of the equipment. An in-service inspection or predictive maintenance program of anticipation of failure is not required.

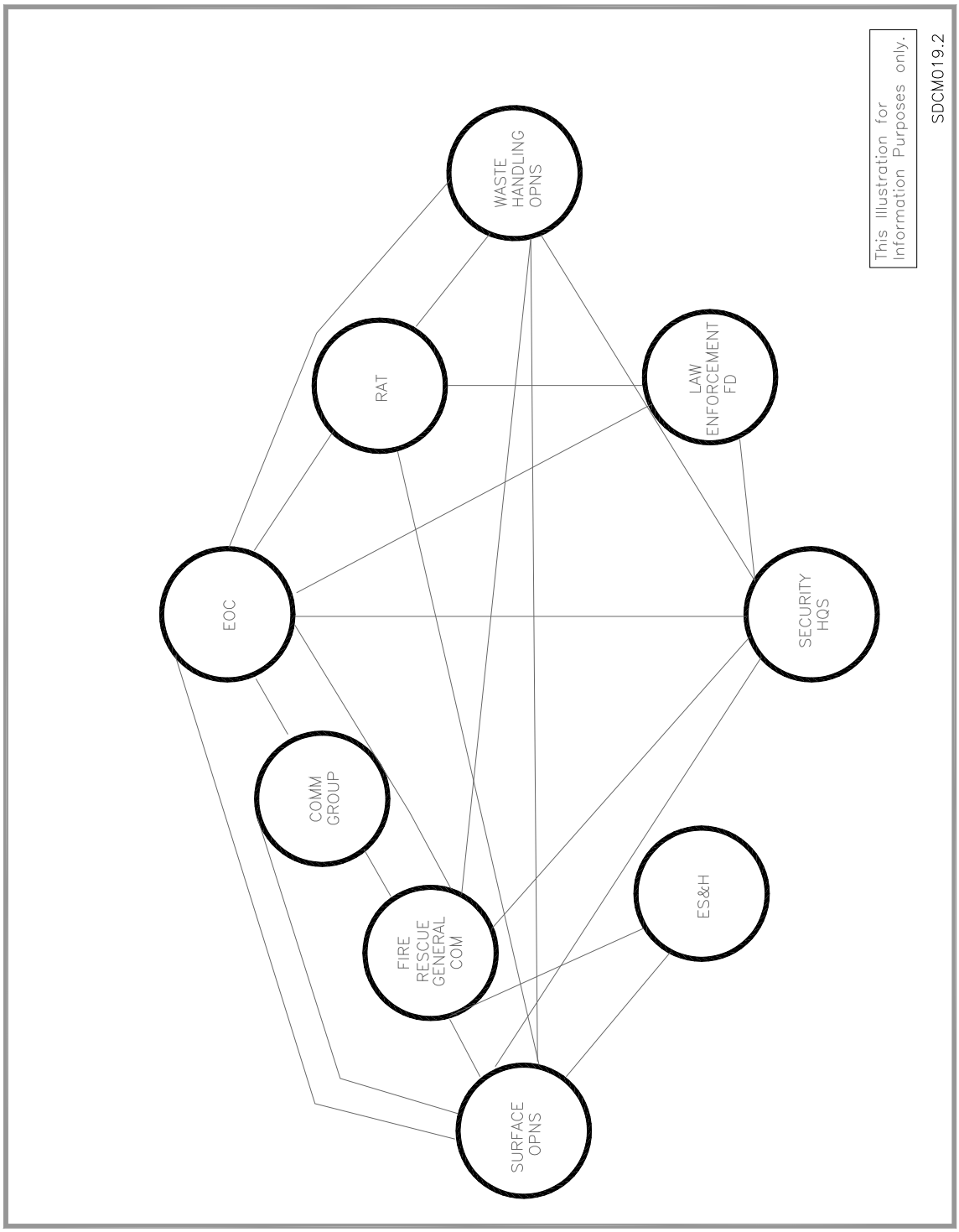

FIGURE PC II-IV-1 Radio System Diagram

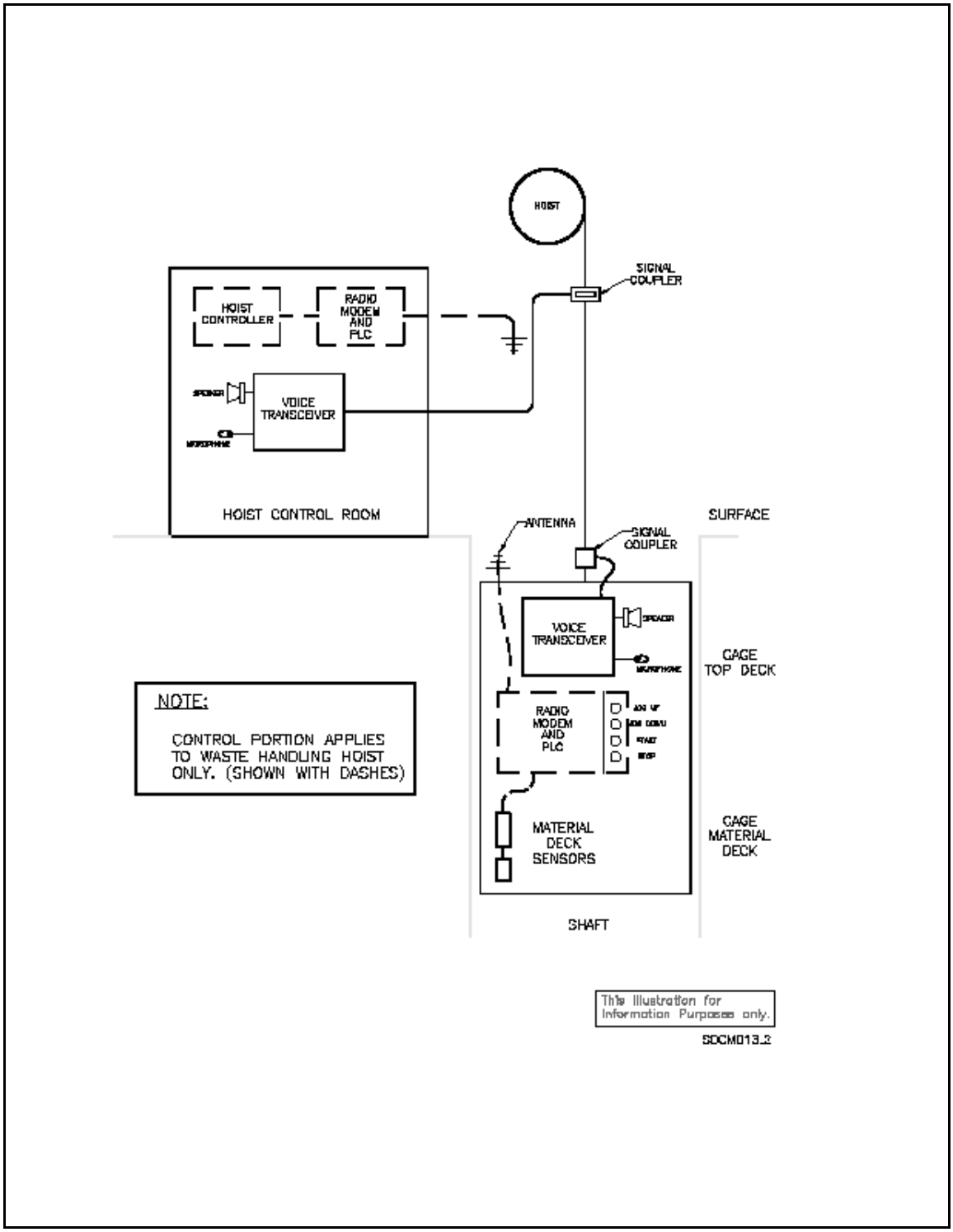

FIGURE II-IV-2 Hoist Radio System Diagram

Working Copy

Part II, Chapter V

Subsystem PC05, Shared Computing Resources

TABLE OF CONTENTS

1.0 PRIMARY FUNCTIONS II-V-1

1.1 Shared Computing Resources Functions (WIPPnet) (PC05) II-V-1

2.0 DESIGN REQUIREMENTS II-V-1

2.1 General II-V-1

2.2 Subsystem General Requirements II-V-2

2.3 Operational Requirements II-V-2

2.6 General Arrangement and Essential Features II-V-4

2.7 Maintenance II-V-5

2.8 In-Service Inspection and Testing II-V-5

2.9 Instrumentation and Control II-V-5

2.10 Interfacing Systems II-V-5

2.11 Quality Assurance II-V-5

2.12 Codes and Standards II-V-5

2.13 Reliability Assurance II-V-7

3.0 DESIGN DESCRIPTION II-V-7

3.1 Summary II-V-7

3.2 Detailed System Description II-V-8

3.3 System Performance Characteristics II-V-10

3.4 System Arrangement II-V-10

3.5 Component Design Description II-V-10

3.6 Instrumentation and Control II-V-11

Working Copy

3.7 System Interfaces II-V-11

4.0 OPERATIONS II-V-12

5.0 SYSTEM LIMITATIONS, SET POINTS, AND PRECAUTIONS II-V-12

5.1 Limitations II-V-12

5.2 System Setpoints II-V-12

5.3 System Precautions II-V-12

6.0 OFF-NORMAL EVENTS AND RECOVERY II-V-13

6.1 Loss of Electrical Power II-V-13

7.0 MAINTENANCE II-V-13

7.1 Maintenance Approach II-V-13

7.2 Corrective Maintenance II-V-13

7.3 Preventative Maintenance II-V-14

7.4 In-Service Inspection II-V-14

Working Copy

LIST OF TABLES

Table Page

TABLE PC II-V-1 - WIPPnet Wide Area Network II-V-8

TABLE PC II-V-2 - WIPPnet Gateways to Private Networks II-V-9

TABLE PC II-V-3 - Shared Computing Resources System Primary Interfacing Systems II-V-11

TABLE PC II-V-4 - Shared Computing Resources System Secondary Interfacing Systems II-V-11

Working Copy

Chapter II-V

Subsystem PC05, Shared Computing Resources Functions

1.0 PRIMARY FUNCTIONS

1.1 Shared Computing Resources Functions (WIPPnet) (PC05)

The primary functions of the Shared Computing Resources (PC05) are as follows:

- Creation and maintenance of data bases for historical purposes.
- Generation of reports for operators, engineers, supervisors, and managers.
- Processing of scientific, reporting, and business application programs for WIPP scientific, engineering, operations, and administrative staff.
- Providing a Wide-Area Network (WAN) with controlled access enabling the sharing of electronic data between WIPPnet multiuser services and desktop client processors.
- Providing a controlled gateway between networks external to the WIPPnet Wide Area Network (WAN), such as the Internet or the DOE Business Network (DOE-BN), and electronic data processing systems on the WIPPnet, such as the WIPP Waste Information System (WWIS).

2.0 DESIGN REQUIREMENTS

2.1 General

- Shared Computing Resources (PC05) shall provide a shared data communications network and centralized shared computers to provide interactive processing and communications for engineering, scientific, and administrative data.
- Network communication hardware and communication protocols shall conform to industry standards.
- Operation and configuration of hardware and software connected to Shared Computing Resources (PC05) shall be compatible with established network communication standards.

Working Copy

- Network connectivity to other external networks such as the Internet shall be controlled through industry standard methods for network security.

- The system's design shall allow periodic testing without disruption of vital functions.

- Input and output to the centralized shared computing resources shall be through current industry standard input/output hardware and software such as terminals, PC's, terminal emulation software, printers, plotters, and monitors.

- Shared Computing Resources shall satisfy the interactive processing needs of the WIPP facility. Interactive processing shall have the highest priority. The operating systems of the centralized shared computing resources shall allow for easy modification of the system's parameters to allow the computer operator to tailor the computer's response to specific applications.

- Data bases shall be maintained on disks, with backup and permanent storage.

- As a minimum, configuration of the fiber-optic cable backbone, serving Plant and General Purpose facilities, and Shared Computing Resources equipment located in the waste stream portion of the facility, shall be shown on PC05 Subsystem engineering documents.

- PC05 Shared Computing Resources Function shall provide networking access to other system functions such as the CMS and WWIS data.

2.2 Subsystem General Requirements

There are no subsystem general requirements for the PC05 equipment.

2.3 Operational Requirements

The Shared Computing Resources (PC05) Functions operational requirements are as follows:

2.3.1 The Shared Computing Resources (PC05) System shall provide engineering, scientific and administrative data processing functions. To insure full performance of all operational functions, consideration shall be given, but not be limited, to factors such as the following:

- Multiprogramming operating systems for efficient information processing.

Working Copy

- Minimization of transmission errors through the data links.
- System's response to user demands for input/output.
- Auto-restart and data salvage during power source fluctuations.
- On-line system's test and diagnostic capabilities.
- Capabilities for repair of equipment on-site.
- Modular design and packaging of system's components to enable the removal of components from operation without affecting the operation of the remaining equipment.
- Design of the system's architecture to support redundant or fault-tolerant system's elements.
- Use of standardized cables and plugs for interconnections.
- High availability and adequacy of system's documentation.
- Availability of training courses for operation and maintenance of the system.

2.3.2 The Shared Computing Resources (PC05) shall include the following:

- Network fiber-optic cables
- Network communications hardware
- Network communications software
- Data communications protocols
- Software security protocols
- Network servers
- Server system software

2.3.3 All data bases shall be protected by backup procedures.

2.3.4 The Shared Computing Resources (PC05) shall provide data processing on a 24-hour basis, except during planned power outages or for required system maintenance and upgrades.

Working Copy

2.3.5 The Shared Computing Resources (PC05) shall operate within all applicable specifications when subjected to the following power supply variations.

- 120 vac ± 10%, 60 Hz ± 1%
- 208 vac ± 10%, 60 Hz ± 1%

2.4 Structural

The Shared Computing Resources (PC05) system is Design Class IIIB. There are no special structural requirements for the equipment of PC05 system.

2.5 Cross Reference

Refer to the identified sections of Chapter G for the general requirements set forth for the following technical and operations topics.

2.6 General Arrangement and Essential Features

2.6.1 The major components of the Shared Computing Resources (PC05) shall be located in rooms having adequate light, HVAC, electric support facilities, and functional capability to provide for the requirements imposed by the computer(s).

2.6.2 Primary computer rooms shall be located at the site Support Building and the SWB.

2.6.3 Access into the computer room(s) shall be controlled.

2.6.4 The local input/output devices and personal computer interfaces of the Shared Computing Resources (PC05) shall be located throughout the site as required to support business and scientific applications.

2.6.5 The temperature, humidity, and fire protection in the site Computer Room and at the Shared Computing Resources (PC05) local terminals shall be as required for the CMS equipment that is co-located in the site Computer Room.

2.6.6 All data links cabling shall be adequately separated from light and power wiring and from other possible sources of electromagnetic and electrostatic interference.

2.6.7 Devices that produce electromagnetic transmissions that interfere with shared computer equipment, such as mobile radios for fire and security services, construction crew or maintenance walkie-talkies and telemetry shall not be used within the Computer Room(s).

Working Copy

2.6.8 Where required, electrostatic shielding shall be provided.

2.7 Maintenance

2.7.1 Provision shall be made for repair or replacement of malfunctioning components, and the equipment shall be designed for easy replacement of the components.

2.7.2 The design concept of the system shall allow, within practical limits, for the removal of malfunctioning modular units for maintenance without affecting the remaining operations of the system.

2.7.3 Standard, computer-industry, maintenance practices shall be followed for the Shared Computing Resources equipment.

2.8 In-Service Inspection and Testing

2.8.1 Inspection and testing of the components of the Shared Computing Resources system shall be performed in accordance with the manufacturer's recommended practices and procedures.

2.9 Instrumentation and Control

There are no subsystems specific instrumentation and control requirements for the PC05 equipment.

2.10 Interfacing Systems

Refer to Section 3.7 for the Interfacing system requirements.

2.11 Quality Assurance

There are no subsystem specific quality assurance requirements for the PC05 equipment.

2.12 Codes and Standards

The designated editions of the following publications and their addenda are a part of this system design description. Detailed applications of these codes and standards are denoted in other sections and/or related specifications.

<u>American National Standard Institute Codes (ANSI)</u>

C2 National Electrical Safety Code (NESC)

Working Copy

U.S. Department of Energy

DOE Order 430.1	Life-Cycle Asset Management
DOE Order 420.1	Facility Safety

Electronic Industries Association (EIA)

232	Interface Between Data Terminal Equipment and Data Communication Equipment Employing Serial Binary Data Interchange
310	Racks, Panels and Associated Equipment
334	Signal Quality at Interface Between Data Processing Terminal Equipment and Synchronous Data Communications Equipment for Serial Data Transmission
440	Fiber-Optic Connector Terminations
429	Industry Standard for Connectors Electrical Flat Cable Type

Federal

30 CFR 57	Health and Safety Standards - Metal and Nonmetallic Underground Mines (Signaling)
40 CFR 265	Subpart D, Contingency Plan and Emergency Procedures
EPCRA	Emergency Planning and Community Right-to-Know Act
29 CFR 1910	Occupational Safety and Health Standards, General Industry
FIPS Pub. 38	Guidelines for Documentation of Computer Programs and Automated Data Systems

Institute of Electrical an Electronics Engineers (IEEE)

488	Digital Interface for Programmable Instrumentation
583	Modular Instrumentation and Digital Interface System (CAMAC)
595	Serial Highway Interface System (CAMAC)

Instrument Society of America (ISA)

55.1	Hardware Testing of Digital Process Computers

National Electrical Manufacturers Association (NEMA)

NEMA ICS 6-78	Enclosures for Industrial Controls and Systems, Rev. 1, Instrumentation and Control Systems

National Fire Protection Association (NFPA)

NFPA No. 70	National Electrical Code (NEC)
NFPA No. 72	National Fire Alarm Code
NFPA No. 70B	Electrical Equipment Maintenance

2.13 Reliability Assurance

There are no subsystem specific reliability assurance requirements for the PC05 equipment.

3.0 DESIGN DESCRIPTION

3.1 Summary

The PC05 Shared Computing Resources includes:

- A WTS-managed Wide Area Network serving WIPP project needs (WIPPnet)
- Controlled gateways between WIPPnet and external networks, such as the Internet or the DOE Business Network (DOE-BN)
- Network cabling
- Network communications hardware and software

- Shared computational resources

3.2 Detailed System Description

3.2.1 Wide Area Network (WIPPnet)

The WIPPnet Wide Area Network provides inter-connectivity between the WIPP, the underground facilities, and in-town buildings. See Illustration below:

TABLE PC II-V-1 - WIPPnet Wide Area Network

```
Site Networks Elements        In-Town Network Elements

WIPP Site ------------------------- Skeen-Whitlock
Surface                                Building

   ↕                                      ↕

WIPP Site ---------------------------- 401 North Canal
Underground                              Building
```

These connections are designed to minimize network traffic and problems between segments. Fiber-optic cable provides connectivity between buildings and the Underground areas at the WIPP site. Microwave and fiber links established through contracts with the local telephone provider provide connectivity between the WIPP site and the in-town network elements. Each of these links support 10 Mb/sec data transfer rate. WIPPnet utilizes industry-standard network protocols such as TCP/IP, and DECnet.

3.2.2 WIPPnet Gateways to External Networks.

WIPPnet supports connections to other networks. These networks include the following:

- The Internet
- DOE Private Networks
- Other WIPP Participants

The Internet connection is protected by a robust firewall that prohibits unauthorized access to the WIPPnet. Internet access is provided to WIPP by contract with an Internet provider company.

The Department of Energy has developed several private networks such as the DOE Business Network (DOE/BN). These networks are for special purpose access between DOE sites. These connections give access

Working Copy

between the WIPPnet and site such as Albuquerque, German Town, Idaho, and Rocky Flats.

TABLE PC II-V-2 - WIPPnet Gateways to Private Networks

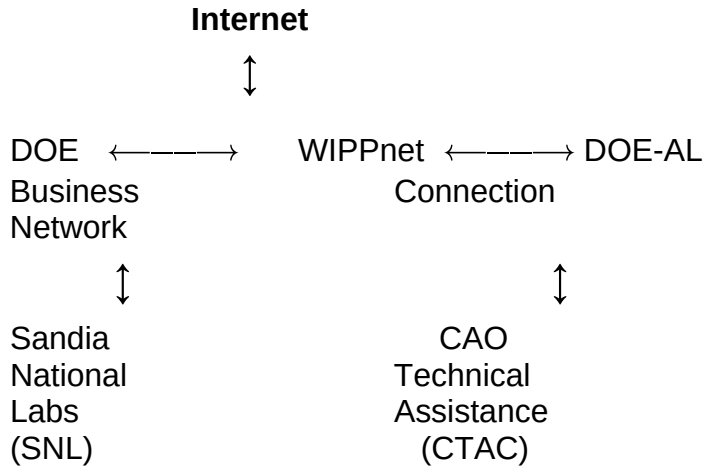

3.2.3 Network Cabling

Multimode fiber-optic cable has been used to develop the site network backbone, It has been selected to provide for network connectivity over extended distances, with the greatest bandwidth possible.

Fiber-optic cable is used between floors on multi-floor buildings where needed.

Unshielded twisted pair cable is used for network access to the desktop.

3.2.4 Network Communications Hardware and Software

All network communication hardware must perform to the IEEE specification 802.3 for local area networks. Primary network concentrators distribute data across the fiber-optic cable backbone to other concentrators or hubs. These concentrators must conform specifically to the IEEE 802.3 specifications for 10Base-T, for unshielded twisted pair, 10Base-FB for fiber backbones, and 10Base-FL for fiber links.

Concentrators are of modular design to support replacement of components without major disruption of network activity.

Network switches support multiple virtual networks, and isolate individual segments from adjacent networks.

WIPPnet utilizes Cisco Systems routers and routing technology. These systems comply with the Department of Energy practice of using the IGRP routing protocol which is proprietary to Cisco.

TCP/IP protocol is the primary networking protocol used on the WIPPnet. There are several registered blocks of network addresses, along with private internet addresses used in accordance with the Network Working Group request for comments 1918 (rfc 1918). Other protocols include DECnet, LAT, NetBeui, etc.

3.2.5 Shared Computing Resources

Networked servers on the WIPPnet provide for application processing, file and database servers, and print sharing. Operating systems for servers vary depending on the requirements of the applications. For example, WWIS resides on a system with a UNIX operating system, NT operating systems are used for file, print, and e-mail services, and IBSS resides on a DEC VMS system.

Most network servers are located in controlled computer rooms, either at the site, or in an in-town facility. For example, temperature, humidity, UPS, and access are controlled at the computer room in the SWB in town. The site computer room, located near the CMR room in the Support Building, has UPS and access control.

Data is protected on systems through regular data backup procedures. WTS maintains and implements procedures to perform risk analysis and develop contingency plans for the shared computing resources (e.g. for equipment, applications, and data). Contingency plans are posted in the WIPPnet computer rooms.

3.3 System Performance Characteristics

The PC05 equipment is standard shared computing resources and no special performance characteristics above industry standards for computer and networking hardware are required.

3.4 System Arrangement

See Section 3.2.2 for the detailed system arrangement.

3.5 Component Design Description

See Section 3.2 for the detailed component design description.

3.6 Instrumentation and Control

There is no instrumentation and control hardware associated with the PC05 system.

3.7 System Interfaces

TABLE PC II-V-3 - Shared Computing Resources System Primary Interfacing Systems

System Designator	System Title
AU00	Underground Facility & Equipment
CF00	Plant Buildings, Facilities, & Misc. Equipment
ED00	Surface Electrical System
FP00	Fire Protection System
GC00	General Civil and Structural
HV00	Heating, Ventilation and Air Conditioning System
PP00	Plant Protection

TABLE PC II-V-4 - Shared Computing Resources System Secondary Interfacing Systems

System Designator	System Title
ED00	Electrical System Surface and Underground

3.7.1 Power

120 vac, 60 Hz uninterruptible power is supplied to the Shared Computing Resources (PC05) devices in the Support Building by the Electrical System (ED00).

3.7.2 Location and Mounting

The Confinement Facilities (CF00) provides space and mounting for PC05 system components such as racks and cabinets.

The General Civil and Structural System (GC00) provides the facilities to locate the PC05 system components such as racks and cabinets.

3.7.3 Fire Protection System

The Fire Protection System (FP00) provides the fire protection for the PC05 system components.

3.7.4 Plant Protection System

The Plant Protection System (PP00) provides the anti-theft plant protection for the PC05 system components.

3.7.5 Heating Ventilation and Air Conditioning

The Heating, Ventilation and Air Conditioning System (HV00) provides the HVAC for the PC05 system components.

3.7.6 The Underground Facility and Equipment System (AU00) provides the facilities to locate the PC05 system components such as racks and cabinets in the underground.

3.7.7 The Shared Computing Resources System (PC05) provides the facilities to support the ED00 system plant metering project.

4.0 OPERATIONS

Refer to the current, approved revision of the vendor's operating manuals for information related to the PC05 system component operation.

5.0 SYSTEM LIMITATIONS, SET POINTS, AND PRECAUTIONS

5.1 Limitations

The computer systems located in the site and in-town computer rooms are powered by UPS systems. In case of the loss of electrical power, 30 minutes, minimum, are available to shutdown the system.

Maintenance support is obtained under a maintenance contract. Service is usually available within a day.

5.2 System Setpoints

None

5.3 System Precautions

None

Working Copy

6.0 OFF-NORMAL EVENTS AND RECOVERY

The only automated off-normal event recovery process associated with the PC05 hardware is associated with a loss of electrical power.

6.1 Loss of Electrical Power

6.1.1 At the Skeen Whitlock building, upon loss of normal AC power, the UPS in the computer room will continue to power the servers for at least 30 minutes, providing uninterrupted operation. No operator action is required to maintain UPS power to the equipment when normal AC power is lost.

At the WIPP site, upon loss of normal AC power, the Electrical Distribution system UPS in the Support Building will continue to power the servers for at least 30 minutes, providing uninterrupted operation until power is supplied by the diesel generator. No operator action is required to maintain UPS power to the equipment when normal AC power is lost.

6.1.2 Upon failure of the inverter the UPS will transfer to normal AC power without operator action. The Electrical System UPS will provide power through a power conditioner.

6.1.3 When an extended power outage is anticipated, an orderly shutdown of the equipment should be performed.

6.1.4 Contingency plans, with an associated list of responsible personnel, are maintained in each computer room.

Loss of the WIPPnet will not prevent Plant Operations from being performed.

7.0 MAINTENANCE

Refer to Section 7.0 of Chapter G for general maintenance requirements.

7.1 Maintenance Approach

The computer equipment and monitors on-site are repaired when they fail. No part replacement in anticipation of failure is required. No outline operability or functional testing is required.

7.2 Corrective Maintenance

The replacement of equipment for the Shared Computing Resources Functions is accomplished under a contract with a knowledgeable vendor. No WIPP generated component replacement procedures are required.

Working Copy

7.3 Preventative Maintenance

There are no scheduled preventive maintenance procedures required for the Shared Computing Resources equipment.

7.4 In-Service Inspection

Daily use of the equipment and the system monitoring features of the network provide a continuous inspection of the equipment. An in-service inspecting or predicative maintenance program for anticipation of failure is not required.

Working Copy

Part II, Chapter VI

Subsystem PC06, Emergency Operations Center, EOC

TABLE OF CONTENTS

1.0 PRIMARY FUNCTIONS II-VI-1

2.0 DESIGN REQUIREMENTS II-VI-1

2.1 General II-VI-1

2.2 Subsystem General Requirements II-VI-2

2.3 Operational Requirements II-VI-2

2.4 Structural II-VI-2

2.5 General Arrangement and Essential Features II-VI-3

2.6 Maintenance II-VI-3

2.7 In-Service Inspection II-VI-4

2.8 Instrumentation and Control II-VI-4

2.9 Interfacing Systems II-VI-4

2.10 Quality Assurance II-VI-4

2.11 Codes and Standards II-VI-4

2.12 Reliability Assurance II-VI-4

3.0 DESIGN DESCRIPTION II-VI-4

3.1 Summary II-VI-4

3.2 Detailed System Description II-VI-5

3.3 System Performance Characteristics II-VI-7

3.4 System Arrangement II-VI-7

3.5 Component Design Description II-VI-8

3.6 Instrumentation and Control II-VI-12

Working Copy

3.7 System Interfaces II-VI-13

4.0 OPERATIONS II-VI-13

5.0 SYSTEM SETPOINTS, LIMITATIONS, AND PRECAUTIONS II-VI-14

5.1 Limitations II-VI-14

6.0 OFF-NORMAL EVENTS AND RECOVERY II-VI-14

6.1 Loss of Electrical Power II-VI-14

7.0 MAINTENANCE II-VI-14

7.1 EOC Facility Maintenance II-VI-14

7.2 PC06 Equipment II-VI-14

7.3 Corrective Maintenance II-VI-15

7.4 Preventative Maintenance II-VI-15

7.5 In-Service Inspection II-VI-15

Working Copy

LIST OF TABLES

Table Page

TABLE PC II-VI-I - Emergency Operations Center Primary Interfacing Systems II-VI-13

Working Copy

Chapter II-VI

Subsystem PC06, Emergency Operations Center, EOC

1.0 PRIMARY FUNCTIONS

- The EOC provides a centralized location from which the site emergency organization evaluates, coordinates and manages the response activities and communicates with the DOE, and other Federal, state and local organizations.

- The EOC provides for the efficient and effective accomplishment of the following functions on a continuous basis through an emergency:

  - Receive data and information from the CMR and/or the scene of the emergency.

  - Assess the consequences of the emergency events, evaluate the onsite impact of the events on personnel and the environment and coordinate response activities.

  - Provide management and technical support to personnel operating the site and/or conducting the specific activities involved in the emergency.

  - Receive, evaluate and arrange data from the emergency monitoring teams.

  - Coordinate onsite personnel protective actions.

  - Communicate information and coordinate emergency response activities with DOE, other Federal, state and local organizations.

  - Determine and recommended public protective actions to appropriate state and/or local agencies.

2.0 DESIGN REQUIREMENTS

Refer to 2.0 of Chapter G for plant communication system general design requirements.

2.1 General

The PC06 system includes the hardware to support the functions of the Emergency Operations Center (EOC).

Working Copy

2.2 Subsystem General Requirements

The Emergency Operations Center (EOC) shall provide a decision-making management center for emergencies.

It shall be a part of a WIPP Emergency Plan that established requirements and procedures in compliance with applicable DOE orders.

Access to the EOC shall be controlled.

Activities such as Strategy, DOE-AL-DOE/WIPP Liaison, communications, and Tactical Coordination will be conducted in separate areas with the EOC.

The EOC shall be equipped and supplied to permit efficient actions by the emergency management personnel.

2.3 Operational Requirements

- Two-way VHF-FM radio communications with off-site emergency response organizations
- Four two-way VHF-FM radio communication channels for Site Security and Safety, Site Operations, Site Emergency and a repeater to Carlsbad Safety and Security
- Dedicated off-site telephone lines
- Two-way radio for communication with local ambulance and hospital personnel
- Dedicated lines (open) with DOE/AL EOC
- PC compatible computer with and Internet connection
- STU-III telephones
- Telecopiers
- Mine pager phone
- PC (IBM compatible) computer link to site and CMS information via WIPP net

2.4 Structural

There are no special structural requirements for the Design Class IIIB equipment of the PC06 system.

Working Copy

2.5 General Arrangement and Essential Features

The location, size, communications features, and access are determined by considering DOE Order 151.1B, *Comprehensive Emergency Management System*

The EOC shall include separate rooms furnished as follows:

A Strategy Center with electronic status displays and stations for the Crisis Manager, Safety, Operations, Engineering, and the DOE Facility Representative.

A Tactics Center with stations for the Security Tactics Team, Safety Tactics Team, Operations and Logistics Tactics Teams, DOE-AL communicators for Security and Public Affairs, Switchboards operator, and Message Runner.

A Communication Room with base radios, telephones, mine phones, and telecopier.

An EOC representative's office.

The EOC shall be designed to permit easy voice communication within each room.

The Strategy Center shall contain electronic status displays controlled by operators in the Tactics Center.

The Strategy Center electronic status display computer shall be programmed to permit rapid, user-friendly status updating with a minimum of interference with active displays.

The Strategy Center electronic status displays shall include the following types of information:

- Action Items
- Safety Information
- Security Information
- Operational Conditions
- Actions Display

2.6 Maintenance

Provision shall be made for repair or replacement of the malfunctioning EOC Uninterruptible Power Supply components using standard site work authorization per approved procedures.

Working Copy

2.7 In-Service Inspection

There are no subsystem specific in-service inspection requirements for the PC06 equipment.

2.8 Instrumentation and Control

There are no subsystem specific instrumentation and control requirements for the PC06 equipment.

2.9 Interfacing Systems

Refer to 3.7 for Interfacing System requirements.

2.10 Quality Assurance

There are no subsystem specific quality assurance requirements for the PC06 equipment.

2.11 Codes and Standards

Department of Energy

DOE Order 151.1	COMPREHENSIVE EMERGENCY MANAGEMENT SYSTEM
Federal 29 CFR 1910	Occupational Safety and Health Standards, General Industry

2.12 Reliability Assurance

There are no subsystem specific reliability assurance requirements for the PC06 equipment.

3.0 DESIGN DESCRIPTION

3.1 Summary

The EOC is located on the site in the safety and emergency services facility. It contains communication devices that are a part of the Dial Phones, Plant PA and Alarm Systems, Mine Pager Phones, and Radio and Other systems. A backup for the on-site EOC is provided in the Skeen-Whitlock Building in Carlsbad, NM.

Working Copy

3.2 Detailed System Description

The Emergency Operations Center (EOC) is the designated, centralized location from which the site emergency response organization evaluates, coordinates and manages response activities and communicates with DOE and other federal, state, and local organizations. The emergency operations center is located on the WIPP site, on the first floor of the safety and emergency services facility (Building 452).

The EOC is made up of four separate, connecting rooms: a strategy center, a tactics center, a communications room, and the EOC office.

3.2.1 Strategy Center

The strategy center includes five desks for the crisis management team: the crisis manager, deputy crisis manager and safety, operations, and engineering representatives. The crisis manager's desk has a STU III phone (Section 3.5.5). The remaining four management team desks are equipped with multiple line dial phones with speed-call buttons. A sixth desk, for a legal representative, has a single-line phone.

3.2.1.1 Video Displays

Data is displayed on six large video displays (CRTs) in the Strategy Center in view of the crisis team members. Information on five of the displays is controlled by personnel at personal computers in the tactics center. Each CRT is dedicated to a specific category of information: environmental, action items, security, safety, and operations. The sixth CRT is available to display video information programs from the descrambler equipped earth satellite station receiver, VCR, or other video program source. The satellite receiver obtains signals from a satellite dish antenna.

3.2.2 Tactics Center

The Tactics Center is adjacent to the Strategy Center. The window between the two centers has two slots with hinged covers for passing written communications.

The tactics center includes a printer and a personal computer with an Internet link for exchanging computer files with the DOE/Albuquerque EOC.

The tactics center includes personal computers for the generation and logging of messages.

Working Copy

3.2.2.1 Tactical Table

Desk space, single line phones, including several with direct business lines, and a STU III phone are provided for Public Affairs, Safety, Security, Underground Operations, Radiation Safety, Waste Handling, Surface Operations, and Transportation representatives.

This group is also provided with monitors which display the same operations, action items, and security information displayed on the Strategy Center monitors.

3.2.3 Telephone Switchboard

Incoming calls to EOC dial phones are controlled by an operator at a telephone switchboard in the EOC.

3.2.4 Security

A desk is provided for a WIPP security inspector near the Tactics Center door, which is the controlled entrance to the EOC. A closed circuit TV system with a surveillance camera in the corridor provides visual identification of personnel approaching the EOC entrance.

3.2.5 Communications Room

The communications room is adjacent to the Tactics Center with a window between. Communications equipment such as on and off-site radio base stations and a mine page phone are located in this room.

3.2.6 EOC Office

The EOC office provides space the EOC coordinator during normal site operation and when the EOC is activated. It includes an intercom with the tactics center. It provides a private area for conferences during EOC activation.

3.2.7 Alternate EOC

In the event that the EOC located at the WIPP Site is not operable an Alternate Emergency Operations Center (AEOC) is established in the Skeen-Whitlock Building in Carlsbad, New Mexico. The AEOC will maintain communications with the CMR to monitor and perform the primary functions of the EOC.

Working Copy

3.3 System Performance Characteristics

3.3.1 The EOC is a part of the WIPP Emergency Plan followed to minimize the impact of emergency events upon the health and safety of plant personnel, the general public, the environment, and the WIPP mission.

3.3.2 In the event of an Occupational Emergency, the Facility Shift Manager (FSM) will direct the event until the EOC is activated. Upon EOC activation, the Crisis Manager (the WTS Manager or his designee) will have authority over the emergency actions through the FSM. The program provides for an immediate on-site management response, and ensures that proper notifications are made.

3.3.3 Operational Emergency Hazardous Materials, will be based on hazard survey identification of Threshold Quantities listed in 29 CFR 1910.119 or 40 CFR 68.130 and planning quantities listed in 40 CFR 355 and 10 CFR 30.72 for radionuclides. Management for this event will be operationally the same as covered in paragraph 3.3.2 with specific emphasis placed on responder protective actions, Health and Safety issues and occurrence reporting variations.

3.3.4 The EOC arrangement is described in 3.4. The Strategy Center contains the Crisis Manager and the Deputy Crisis Manager. The Tactics Center contains the Security Tactics Team; Safety Tactics Team; Operations and Logistics Tactics Team; 5 Status Display Operators; Switchboard Operator; and a Message Runner. The Communications Room houses base radios, telephones, mine phones and telecopier.

3.3.5 Communication modes within the EOC are written information slips, voice, and electronic status boards. Information displayed on the five status boards in the strategy center is controlled by five operators in the tactics center.

3.3.6 External communications with on-site and off-site emergency organizations and personnel are maintained via two-way radios, dedicated and normal telephone lines, a personal computer data link with DOE-AL, STU III telephone, two telecopiers, and mine pager phones.

3.4 System Arrangement

The EOC is located in the emergency and safety services facility (Building 452).

The Strategy Center, Tactics Center, Communications Room, and EOC office are in adjoining separate rooms.

The earth station satellite dish antenna is mounted an a pedestal located east of the waste handling building.

Working Copy

3.5 Component Design Description

The EOC includes components that are a part of other systems, some of which are described elsewhere in this System Design Description. The EOC contains the following types of components.

3.5.1 Dial Phones:

- Single-line phones
- Sixteen-line phones
- Telephone switchboard
- Facsimile machine

3.5.2 Mine Pager Phones:

- Mine pager phone

3.5.3 Plant PA and Alarm Systems:

- Ceiling Speakers
- Multiparty Paging Station

3.5.4 Radio and Other:

- Site Radio Base Station
- Off-Site Radio Base Station
- Data Encryption Standard (DES) Radio System

3.5.5 STU-III Phones

The STU-III telephones in the Strategy Center, Tactics Center and Communications Room provide secure telephone communications between the EOC and other U.S. Government locations which have secure access to the STU-III system. The STU-III phones are on direct business lines that do not go through the dial phone system communications controller. They can be used in a secure or unsecured mode. The secure mode is activated by the insertion of a key. Keys are kept in a locked box in the tactics center and other locations and are available to authorized personnel.

3.5.6 STU-III Phone and Facsimile (FAX)

A facsimile machine in the communications room is connected to a STU III phone and can be used to transmit and receive secured or unsecured documents.

Working Copy

3.5.7 Tactics Center and Strategy Center Monitors

The Strategy Center video displays and Tactics Center monitors are commercial CRT monitors.

3.5.7.1 Video Displays

Data is displayed on six large video displays (CRTs) in the Strategy Center in view of the crisis team members. Information on five of the displays is controlled by personnel at personal computes in the tactics center. Each CRT is dedicated to a specific category of information: environmental, action items, security, safety, and operations. The sixth CRT is available to display video information programs from the descrambler equipped earth satellite station receiver, VCR, or other video program source.

3.5.7.2 Strategy Center Video Display Personal Computers

Personal Computers with color monitors are used to control the Strategy Center video displays.

The tactics center includes personal computers from which the messages appearing on the five monitors in the strategy center are controlled. A Display Controller application program is used for construction of preformatted display screens and for entering and updating data and information during an emergency. A printer is provided to provide hard copies of the display screen.

3.5.8 Internet Connection

The tactics center includes a printer and a personal computer with an Internet link for exchanging computer files with the DOE/Albuquerque EOC.

3.5.9 Time-of-Day-Displays

Analog wall clocks display the time-of-day in the four U.S. time zones and UTC.

3.5.10 Video Cassette Recorder

A video cassette recorder, with a remote control unit, is provided for presenting video taped material on one of the strategy center video displays.

3.5.11 Telephone Switchboard

Incoming calls to EOC dial phones are controlled by an operator at an attendant station in the EOC. The NEAX2400 attendant station is a compact, desk top unit with non-locking, light-touch function keys, a pushbutton dial

pad and light-emitting diodes. The light-emitting diodes provide information on the status of the calls in progress.

Visual indication of the busy or idle condition of the individual stations is provided by a set of indicators. An alphanumeric display provides station and trunk identification, class of service, time, date, and number of calls waiting. The attendant can originate, answer, hold, transfer, and re-enter call back calls and activate various service features.

3.5.12 On-Site Radio Base Station

The radio communications console in the communications room is capable of accessing all WIPP communications networks.

3.5.13 Off-Site Radio Base Station

The off-site base station in the communications room uses the same frequencies as the security control room off-site base station to provide two-way radio voice communications with local fire protection and law enforcement agencies.

3.5.14 Mine Pager Phone

The mine pager phone is used for two-way communication between the EOC and mine pager phones underground and on the surface. Each mine pager phone on the network operates from self-contained batteries, independent of any other system, and remains operational in the absence of ac power.

3.5.15 Dial Phones

The dial phones, switchboard, and personal computer modem installed in the EOC are a part of the Dial Phone system. Most telephones in the EOC operate through the WIPP site digital communications controller (an automatic computerized switching computer). Others operate on direct business lines, which do not go through the communications controller. All of these lines are carried off-site via telephone company cable and/or microwave transmission.

3.5.16 Descrambler Equipped Satellite Station Receiver

An earth station receiver provides for receiving video programs from earth satellites. The receiver is equipped with a decoder for unscrambling those channels for which a license is held.

3.5.17 Plant PA and Alarm Systems

Evacuation and public address messages broadcast by the CMR operator are heard in the EOC over Plant PA and alarm system speakers.

The page function of the paging station in the EOC can be used to broadcast messages on the speakers in subpaging zone (within building 452).

The party function of the Plant PA and Alarm system is used for communication between the EOC and the CMR and between the EOC and other paging stations in the same zone or, when interconnected by the CMR operator, other site zones.

The PA speakers in the communications room and support conference room are controlled by individual on/off switches.

3.5.18 Electrical Power

Electrical Power is supplied to the EOC from two site substations via an automatic transfer switch located in the EOC.

A battery-backed uninterruptible power source (UPS) in the EOC provides transient-free power to the electrical outlets and backup lighting fixtures. Upon the loss of all AC power to the EOC, the UPS will continue to provide power for at least 30 minutes until the site backup diesel-generator is started.

3.5.19 Electronic White Board

An electronic white board is available for displaying and recording data and information collected or generated in the strategy center.

3.5.20 Miscellaneous Equipment

Other equipment available to the EOC personnel are computer printers, copiers, an overhead projector, a slide projector, a cordless phone, a document shredder, and a chalk board.

3.5.21 AEOC Equipment

The AEOC contains the following equipment at a minimum:

- A radio base station for communication with local agencies, state agencies, local fire agencies, local ambulance, and hospital personnel
- A radio base station for communication to the WIPP Site through the radio repeater link

- Five dedicated phone lines (independent numbers)
- A PC - Personal Computer and printer for information collection
- A FAX machine and telecopier

3.5.22 AEOC Miscellaneous Equipment

Other equipment available to the EOC personnel at the AEOC are copiers, an overhead projector, a slide projector, a cordless phone, a document shredder, and a chalk board.

3.5.23 Uninterruptible Power Supply

The EOC uninterruptible power supply (rated at 10 KVA) provides power when normal AC power is interrupted.

The UPS consist of storage batteries, a battery charger, and an (DC to AC) inverter and a static switch. When UPS is activated the battery charger and the inverter continuously provides transient-free power to the EOC loads.

Under normal operation the battery charger provides power to the inverter, which supplies the EOC loads, and keeps the batteries charged. When ac power fails, the batteries automatically assume the inverter load, there is no interruption in the DC input to the inverter, and no break in inverter output. In the event of an inverter overload, such as an equipment startup, the static switch automatically bypasses the inverter and connects the load directly to the line until the overload condition ends. The static switch also transfers the load to the line when an inverter failure occurs.

A switch on the front panel provides for bypass, startup, operation and shutdown of the UPS. Status lights help the operator during these operations and providing indication such as if the load is being supplied from the UPS or the line. A digital indicator provides information internal function such as input and output voltages, battery time remaining and condition of the load. Visible and audible alarms indicate changes in status.

3.6 Instrumentation and Control

Not applicable.

Working Copy

3.7 System Interfaces

TABLE PC II-VI-I - Emergency Operations Center Primary Interfacing Systems

System Designator	System Title
CF00	Plant Buildings, Facilities, & Misc. Equipment
ED00	Surface Electrical System
FP00	Fire Protection System
GC00	General Civil and Structural
HV00	Heating, Ventilation and Air Conditioning System
PP00	Plant Protection

There are no EOC Secondary Interfacing Systems.

3.7.1 Power

120 Vac, 60 Hz power is provided for the EOC uninterruptible power supply and normal EOC lighting by the Electrical System.

3.7.2 Lighting

Normal lighting in the EOC is provided by the Electrical System (ED00).

3.7.3 Fire Protection

A water sprinkler system is installed in the EOC to protect the facility. See the Fire Protection System Design Description, SDD FP00, for a more detailed description of the fire protection system.

3.7.4 Heating, Ventilation and Air Conditioning

Climatic conditions for personnel comfort and satisfactory EOC equipment operation under normal and emergency operating conditions are provided by the Heating Ventilation and Air Conditioning System (HV00).

3.7.5 Space

The General Civil and Structural system (GC00) provides space for the EOC in the Security and Emergencies Facility.

4.0 OPERATIONS

Refer to the current, approved revision of the vendor's operating manuals for information related to a PC06 system component operation.

Working Copy

5.0 SYSTEM SETPOINTS, LIMITATIONS, AND PRECAUTIONS

5.1 Limitations

5.1.1 The vital loads in the EOC are powered by a UPS. In case of power failure the UPS will allow continued operation for approximately ten minutes based upon the UPS being loaded at its design rating. The typical loads of the EOC allow for greater than 30 minutes of operation.

5.1.2 Normally, the Emergency Operations Center is staffed with one person. In case of emergencies the emergency team can be mobilized in less than ten minutes if they are on-site. If the team members are off-site, additional time would be required to notify the team members and to allow travel to the site.

6.0 OFF-NORMAL EVENTS AND RECOVERY

The PC06 equipment covered by this SDD is not specifically designed to operate during or after a design basis earthquake or during or after being exposed to the effects of a tornado. The equipment should be functionally checked after an event to ensure proper operation. This can be check through normal operation.

6.1 Loss of Electrical Power

6.1.1 The EOC includes a UPS, which will provide power for the EOC for 10 minutes or longer, depending upon the level of power usage in the EOC.

6.1.2 Both UPS power and normal (UPS bypass) power may be removed from the EOC by turning the UPC CONTROL SWITCH clockwise to the EMERGENCY OFF position.

7.0 MAINTENANCE

7.1 EOC Facility Maintenance

Maintenance for the EOC Facility is conducted under the facility landlord program and Management Policy MP 5.16, "Landlord Program." The facility is inspected monthly and corrective action is taken by the landlord inspector.

7.2 PC06 Equipment

7.2.1 STU-III Phones

The operability of the STU-III phones shall be checked for proper operation approximately monthly. Maintenance of the STU-III phone is performed yearly by the encryption circuitry vendor.

7.2.2 Computer Equipment

The computer equipment and monitors on-site are repaired when they fail. No part replacement, in anticipation of failure, is required. No routine operability or functional testing is required.

7.2.3 Satellite TV

The satellite TV antenna and receiver are maintained, as required, by an authorized dealer.

7.3 Corrective Maintenance

Uninterruptible Power Supply (UPS) for the EOC includes an internal microprocessor that continuously monitors the operation of the UPS. The vendor's user manual describes the visual alarms on the unit's from panel, recommends battery maintenance schedules, and advises under what conditions the vendor should be called for service, Corrective Maintenance for the PC06 system UPS is conducted in accordance with standard WIPP site work authorization and configuration management procedures. Corrective maintenance EOC UPS is done in accordance with the vendor's instructions with the unit de-energized or in the Manual Bypass mode. Follow the vendor's instruction when securing the unit to prevent clearing the fault memory. Perform a satisfactory retest after any component replacement to assure the system functions properly.

7.4 Preventative Maintenance

Anticipatory replacement of parts of EOC equipment is not required.

7.5 In-Service Inspection

No routine maintenance of the EOC UPS is required except the maintenance-free batteries should be checked once a year.

A predicative maintenance program for anticipation of failure is not required.

Parts I & II, Appendices

APPENDIX

Statement of Intent

---NOTICE---

The appendices that follow are for information only and thereby are not part of the Controlled Document. Some of the information provided is controlled in various component indices and no attempt to duplicate these is intended here.

Appendices

CM00 - PC00, Plant Monitoring and Communications

TABLE OF CONTENTS

Appendix Page

Statement of Intent . . . . . APP-i

APPENDIX A - References APP-1

APPENDIX B-1 - Acronyms APP-4

APPENDIX B-2 - Definitions APP-6

APPENDIX C - Equipment List APP-8

APPENDIX D - Engineering Drawings APP-9

Working Copy

APPENDIX A - References

CM References

1. Central Monitoring System

    a. O&M Manuals

    b. Toshiba Uninterruptible Power System Operation Manual for Models 1400s, 1400s Plus, and 1400R

    c. Best Uninterruptible Power System Owner's Manual for Models FC 5KVA

Working Copy

APPENDIX A - References

PC References

1. Dial Phones

    a. Reliance Comm/Tec Lorain Model RL30F50 Flotrol Rectifier Instructions, Installation, Operation, Maintenance manual.

    b. NEAX 2400 Information Management System Users Guide, Single Line Station

    c. NEAX 2400 Information Management System Users Guide, Sixteen Line Station

    d. NEAX 2400 Information Management System Users Guide, Attendant Console

    e. NEAX 2400 IMS Command Manual

2. Mine Pager Phones

    a. Gulton Industries, Inc. Femco Division Loudspeaking Mine Telephone Manufacturer's Data Sheets and Manuals

    b. GAI-TRONICS 490 manual

3. Plant PA and Alarm Systems

    a. PA and Intercom System O&M Manual IM956644

4. Radio and Other

    a. Gulton Industries, Inc. Femco Division Hoist House/Cage Communication and Control System O&M Manual

    b. Motorola O&M Manuals

    c. PLECTRON R900 Series Receiver Operations Manual

5. Central Monitoring Room

6. TRUPACT-II Transport Monitoring System

    a. TRANSCOM Shipper and Receiver User Manual

7. Emergency Operations Center

   a. MCS-9120 Maritime Communications System Maintenance Manual

   b. MCS-9120 Maritime Communications System Operations and Installation

   c. Emerson AP101 Series Uninterruptible Power System User Manual

8.0 Back up EOC

   a. Midland Syn-Tech ™ Land Mobile Radio Operations Manual

APPENDIX B-1 - Acronyms

CM Acronyms

AC	alternating current
ASCII	American Standard Coded Information Ixchange
BHD	Bulkhead door
CAM	Continuous Air Monitor
CBFO	Carlsbad Field Office
CFR	Code of Federal Regulations
CMR	Central Monitoring Room
CMS	Central Monitoring System
DC	direct current
DOE	Department of Energy
°F	Fahrenheit
HEPA	High Efficiency Particulate Air
HMI	Human Machine Interface (engineer or operator workstation)
Hz	Hertz
IEC	International Electrotechnical Commission
I/O	input/output
Kv	kilovolt
LPU	local processing unit
NEMA	National Electronic Manufacturers Association
PA	public address
PC	Personal Computer
SCADA	Supervisory Control and Data Acquisition
SSC	Structures, Systems and Components
UPS	Uninterruptible Power Supply
V	volt(s)
Vac	volt alternating current
Vdc	volt direct current
WIPP	Waste Isolation Pilot Plant

APPENDIX B-1 - Acronyms

PC Acronyms

CMR	Central Monitoring Room
CMRO	Central Monitoring Room Operator
CMS	Central Monitoring System
DOE	Department of Energy
DOT	Department of Transportation
EOC	Emergency Operations Center
FTS	Federal Telephone Service
GPCF	General Purpose Computer Functions
SCR	Security Control Room
SDD	System Design Description
TCC	TRANSCOM Control Center
TTMS	TRUPACT-II Transport Monitoring System
VAX	Virtual Address Extension (a trademark of Digital Equipment Corporation)
VHF	very high frequency

APPENDIX B-2 - Definitions

CM Definitions

Alarm: An audible or visual notification of an abnormal event or condition.

Central Monitoring Room (CMR): The room in the Support Building that is the center for overall facility operations.

Central Monitoring System (CMS): The computer-based system that provides monitoring, alarm, and supervisory control.

Database: An integrated collection of data organized to preclude duplication of data, yet permit retrieval of data to satisfy a variety of user's information needs.

CMS Network: The communication link through which data or program files are transferred between CMS units.

Data links: Equipment that transmits information in binary format between two computer systems or between a central processing unit and its peripheral or support equipment (e.g., CRT, printer, or LPU)

Drop: An active CMS component connected to the data highway

Download: The process of transferring files to another unit on the CMS Network.

Facility ground grid: The ground cable encircling each building and substation or other permanent structure containing electrical equipment. Each facility ground grid is connected the plant ground grid.

Input/output (I/O): The circuitry in the LPU that is the interface between a site sensor, monitoring circuit or control circuit and the CMS.

Instrument ground: Analog or digital instrumentation, control, or computer circuit common intended to be maintained at ground potential. The insulated cable that connects the individual instrumentation, control, and instrument grounds to the facility ground or the site ground at one point via a removable link.

Interactive processing: A technique of data processing in which a computer program is executed by the step-by-step interaction between a computer and a user at a terminal.

APPENDIX B-2 - Definitions

CM Definitions

Local Processing Unit (LPU): A CMS unit that accepts analog; and digital inputs and provides CMS analog and digital output to control field devices.

Multiplexing: The transmission and reception of signals over a shared communication channel with means for positively identifying each signal.

Plant ground grid: The grounding cable encircling the site and the rectangular array of cross connecting ground cables.

Protocol: A formal set of conventions governing the format and relative timing of message exchange between two communicating processors.

Real-time processing: The operation of a computer concurrently with a physical process such that the results of the data processing and computations are available to influence or control the process usefully.

Working Copy

APPENDIX C - Equipment List

The equipment covered by this SDD is listed in the WIPP Equipment Register. The equipment register includes the following information.

Equipment Number
Description
System/Subsystem Designator
Manufacturer
Model Number
Design Class
Building/Location
Whether the Operation and Maintenance Manual is on File Comments

APPENDIX D - Engineering Drawings

Refer to the Engineering Drawing Register for a current list of drawings for the systems and subsystems described in this SDD.