Working Copy

SDD: AU00
Revision Number: 5
Revision Date: June 24, 2009

U.S. DEPARTMENT OF ENERGY

WASTE ISOLATION PILOT PLANT

UNDERGROUND FACILITIES AND EQUIPMENT (AU00)

SYSTEM DESIGN DESCRIPTION (SDD)

SDD AU00

Prepared by

Washington TRU Solutions LLC
Carlsbad, New Mexico

For

U.S. Department of Energy

Cognizant Engineer: Ben Zimmerly 04/30/09
Approved for Use Date

Cognizant Manager: Stan J. Patchet 04/30/09
Approved for Use Date

Working Copy

TABLE OF CONTENTS

LIST OF FIGURES iii

LIST OF APPENDICES iv

CHANGE HISTORY v

SUMMARY 1

1.0 SYSTEM DESCRIPTION 2

1.1 AU00 - Underground Facilities and Equipment System 2

1.2 AU01 - Underground Experimental Facilities 2

1.3 AU02 - Underground Disposal Facilities 3

1.4 AU03 - Underground Shaft Pillar Facilities 5

1.5 AU04 - Underground Mobile Equipment 5

1.6 AU05 - Underground Diesel Fuel 7

1.7 AU06 - Underground Ground Control 8

1.8 AU07 - Geomechanical Monitoring 8

1.9 AU08 - Underground and Surface Surveying 11

2.0 DESIGN REQUIREMENTS 21

2.1 AU00 - Underground Facilities and Equipment System 21

2.2 AU01 - Underground Experimental Facilities 25

2.3 AU02 - Underground Disposal Facilities 25

2.4 AU03 - Underground Shaft Pillar Facilities 26

2.5 AU04 - Underground Mobile Equipment 27

2.6 AU05 - Underground Diesel Fuel 27

2.7 AU06 - Underground Ground Control 28

2.8 AU07 - Geomechanical Monitoring 29

Working Copy

2.9 AU08 - Underground and Surface Surveying 30

3.0 SYSTEM OPERATION AND PRECAUTIONS 31

3.1 AU00 - Underground Facilities and Equipment System 31

3.2 AU01, AU02, AU03 31

3.3 AU04 - Underground Mobile Equipment 31

3.4 AU05 - Underground Diesel Fuel 33

3.5 AU06 - Underground Ground Control 34

3.6 AU07 - Geomechanical Monitoring 34

3.7 AU08 - Underground and Surface Surveying 35

Working Copy

LIST OF FIGURES

Figure 1-1 - Underground Excavations 12

Figure 1-2 - Generalized Site Stratigraphy 13

Figure 1-3 - Stratigraphy of the WIPP Repository Horizon 14

Figure 1-4 - Typical Configuration of Waste Disposal Room 15

Figure 1-5 - Typical Drum Mining Machine 16

Figure 1-6 - Typical Boom Type Mining Machine (Roadheader) 16

Figure 1-7 - Typical Underground Equipment 17

Figure 1-8 - Typical Mining Equipment 18

Figure 1-9 - Underground Fuel Storage Area 19

Figure 1-10 - Geomechanical Monitoring Schematic 20

Working Copy

LIST OF APPENDICES

Appendix A - Maintenance Requirements 36

Appendix B - Interfacing Systems 39

Appendix C - References 41

Appendix D - Definitions 42

Appendix E - Equipment List, Drawing List, Specification List, Instrumentation Requirements, Operations Procedures List, O&M Manuals 43

Working Copy

CHANGE HISTORY

REV. NO.	REV. DATE	PAGES/SECTIONS AFFECTED	APPROVED BY
0	6/96	Original Issue - Separated from CF00	ECP 1-AU96-040 ECO NO. 8273
0	9/97	Page 3-3, Figure 3.1-1	ECO NO. 8453
1	10/98	Complete Revision (Issued 8/99)	ECP 1-GP97-111 ECO NO. 8907 ECP 1-AU98-041 ECO NO. 9512
2	05/03	Section 1 - AU05 Section 2 - AU05 All Pages - Format Changes	ECO NO. 10,471
3	09/04	Section 1 Section 2 Appendix A Appendix C Appendix E	ECO NO.11083
4	01/06	Section 2	ECO NO. 11320
5	06/09	Section 1.1 AU00 Section 1.3 AU02 Section 1.5 AU05 Section 1.7 AU06	ECO NO. 12220

SUMMARY

The Underground (U/G) Facility and Equipment System provides the underground space, access, facilities, and equipment that directly support the mining of the WIPP Project. The mined and specially constructed underground areas support the experimental programs for compliance and the waste emplacement for disposal.

The system boundary encompasses the entire underground facility beginning at the bottom of the WIPP shafts. The mining support equipment on the surface (surface haul trucks and shaft duty forklift trucks) is also within this system as are surface surveying activities.

Underground facilities that are not within this system are the electrical, lighting and communication facilities, the underground ventilation facilities and bulkheads, the fire suppression facilities, the compressed air distribution facilities, experimental equipment, nuclear waste handling and disposal equipment, and the air and radiological monitoring systems.

The U/G Facility and Equipment System (AU00) consists of eight subsystems. These subsystems are:

- U/G Experimental Facilities System (AU01)
- U/G Disposal Facilities System (AU02)
- U/G Shaft Pillar Facilities System (AU03)
- U/G Mobile Equipment System (AU04)
- U/G Diesel Fuel System (AU05)
- U/G Ground Control System (AU06)
- Geomechanical Monitoring System (AU07)
- U/G and Surface Surveying System (AU08)

1.0 SYSTEM DESCRIPTION

1.1 AU00 - Underground Facilities and Equipment System

This system includes all of the underground excavations shown on Figure 1-1 comprising the experimental facilities, shaft pillar facilities, and the waste disposal facilities. This system also includes the mobile equipment not directly associated with haulage of nuclear waste, underground diesel fuel storage and distribution, the underground ground control and geomechanical monitoring processes, and underground and surface surveying. The primary functions of the AU00 System is divided into eight subsystems (AU01 - AU08).

The AU00 system provides the underground space, access, facilities and equipment that directly support the experimental programs, the waste emplacement, disposal, and retrievability (as-required) of CH-TRU and RH-TRU waste packages, and the mining and design processes that create this underground space. The underground facility is located centrally within the 16-section WIPP site boundary and covers a footprint of approximately 550 acres. As shown in Figure 1-2, the underground disposal facility is located 2,150 feet below the surface in bedded salt of the Permian Salado Formation. The Salado Formation extends from about 1,000 feet below the surface to about 3,000 feet below the surface. Halite is the most abundant mineral in the Salado Formation. A potash zone exists about 200 feet above the facility level. The facility horizon lies within a 40-foot-thick unit of halite, argillaceous halite, and polyhalitic halite as shown on Figure 1-3.

> The WIPP underground, including the waste disposal area, is required to be located in salt. The salt surfaces of the mined disposal path and disposal panels are required to be noncombustible. **[DSA SC SSC 4.3.6]**

This system is subject to the Code of Federal Regulations (CFR) administered by the Mine Safety and Health Administration (MSHA) and the New Mexico Mine Safety Code for All Mines administered by the New Mexico Bureau of Mines. The MSHA category of the mined facility is Category IV, being noncombustible and non-gassy.

A description of the eight subsystems is provided in the following paragraphs. Specific information concerning system configuration and specific components is provided in the appendices of this document and the registers maintained in the Engineering File Room.

1.2 AU01 - Underground Experimental Facilities

This system provides space and access for the execution and completion of experimental programs to show compliance with regulatory requirements and as directed by the DOE.

The major underground experimental effort at the WIPP was hosted by Sandia National Laboratories (The WIPP Scientific Advisor) beginning in 1983. The portion of the mine north of the shaft pillar area comprises the major experimental area, however, some experiments were conducted in other areas of the mine. An overview of the underground experimental process can be found in the report "In Situ Testing at the Waste Isolation Pilot Plant," SAND87-2382.

The Underground Experimental Facilities are provided by excavated rooms and passages as shown on Figure 1-1. The general locations for some of the more significant and long term experimental programs are listed below. The experimental efforts were essentially completed in the FY 94 time frame.

Room A	Defense High Level Waste (DHLW) Simulations
Room B	DHLW Simulations (Overheated)
Room C	Core Storage and Permeability Tests
Room D	Initial Mining and Miscellaneous Tests
Room G	Rock Behavior Monitoring
Room H	Heated Pillar Monitoring
Room J	Drum Durability
Room L	Plugging and Sealing
Room M	Borehole Plugging and Sealing
Room T	CH and RH TRU Waste Emplacement and Retrieval Demonstration
Rooms 1-4	SPDV TRU Storage Panel Demonstration
Room 2	Geotechnical Observation
Alcoves TA1-TA4	Alcove Tests

1.3 AU02 - Underground Disposal Facilities

This system provides an underground disposal area in which CH and RH waste can be efficiently handled and stored for temporary and/or permanent isolation. The Underground Disposal Facilities comprise a rectangular area with north/south dimensions of about 2,064 feet and 2,545 feet east and west. It is located south of the shaft pillar area.

The underground waste disposal facilities can accommodate simultaneous disposal of CH-TRU and RH-TRU waste packages. A typical configuration of a waste disposal room is shown in Figure 1-4. The underground disposal facilities include mined and to-be-mined entries and rooms for future disposal of CH and RH TRU waste packages.

The disposal area includes four main entries and the crosscuts that provide access and ventilation for these disposal rooms. The normal dimensions for these entries will be kept as small as practical and consistent with the facility needs including ventilation, equipment access, and geotechnical stability. The

WIPP Mine Ventilation Plan, 00CD-0001, requires adequate quantities and velocities of air to prevent the build-up of flammable gases to explosive levels.

> The volume of the disposal panels and rooms must be of a size that when combined with its ventilation prevents or minimizes the occurrence of fires or explosions from releases of flammable liquids or gases. **[DSA SC SSC 4.3.6]**

The ribs (walls) of the disposal rooms and entries will be utilized for storing canisterized RH TRU waste. The amount of TRU waste in each panel or room is limited by thermal and structural aspects of the salt and physical considerations of the equipment. Emplacement is designed to not exceed ten kilowatts per acre. Based upon thermal constraints and equipment design, a spacing of about eight feet between centers for RH TRU waste is defined. Shield plugs may provide shielding between the canisters and the room.

Additional entries and rooms are mined as needed to maintain a reserve of disposal rooms while maintaining ventilation for waste handling and mining operations.

Following completion of waste emplacement in disposal panels 1 and 2, a panel closure system will be emplaced in the panel access drifts.

A panel closure consists of an enlarged concrete barrier with the disturbed rock zone (DRZ) removed and an explosion-isolation wall. The explosion-isolation wall, consisting of a 12 foot thick wall of concrete blocks mortared together with cement, will be located approximately 30 feet from the main concrete barrier. The enlarged concrete barrier will be placed in a series of steel plates that are stiffened by angle iron, and following concrete placement, the formwork will be left in place. The panel closure isolates the closed panel such that there is no air movement inside the closed panel due to the underground ventilation system.

> The closure, installed in both entries of filled panels 1 and 2, must isolate the filled panel from underground ventilation such that there is no motive force to transport material from radiological release within the filled panel to outside the filled panel. The closure must isolate the waste inside the filled panel from waste handling activities in the active waste handling portion of the underground. **[DSA SS SSC 4.4.10]**

Upon completion of waste emplacement in disposal panels 3 through 8, and prior to final panel closure, a panel is monitored for methane and hydrogen generation. Monitoring of the filled panel will commence following installation of a substantial barrier and a bulkhead. The substantial barrier is composed of salt or other non-combustible material installed between the waste face and the bulkhead to protect the waste from events such as vehicle impacts. The substantial barrier incorporates a chain link and brattice cloth room closure. The isolation barrier isolates the closed panel such that there is no air movement

inside the closed panel due to the underground ventilation system. Bulkheads and chain link and brattice cloth room closures are described in SDD VU00.

The substantial isolation barriers, installed in both entries of each filled panel, must isolate the filled panel from underground ventilation such that there is no motive force to transport material from radiological releases within the filled panel to outside the filled panel. The substantial isolation barriers must isolate the waste inside the filled panel from waste handling activities in the active waste handling portion of the underground. **[DSA SS SSC 4.4.10]**

1.4 AU03 - Underground Shaft Pillar Facilities

This system is defined as an enclosed area within radii of 1,100 feet around the salt handling, air intake, and exhaust air shafts blended with a 1-200-foot radius around the waste shaft. This area is adjacent to the experimental area on the north and the disposal area on the south. These facilities embody most of those necessary for the daily operation of the underground disposal facilities and include the following:

- Maintenance shops and tool storage areas
- Battery charging stations
- Entries and rooms for access
- Refueling Bay
- Portable buildings for office facilities
- Staging areas
- Lunch rooms
- Sanitary facilities
- Equipment storage
- Parking areas
- Spaces for electrical substations
- Interfaces with the four shafts to the surface

Within this area the air intake shaft, the salt handling shaft, the exhaust shaft, and the waste handling shaft transition into the underground facility. This area includes four main north-south entries, W170, W30, E140, and E300. Crosscuts connect these entries and provide space for equipment, facilities, and ventilation circuit connections.

The salt shaft opening in the underground facility is the basis for the drift numbering system. The drift numbers represent the distance in feet the drift is away from the salt shaft, the letter designates the cardinal direction.

1.5 AU04 - Underground Mobile Equipment

This system provides vehicles, equipment and transporters for conducting underground excavation operations, handling of materials, facility maintenance activities, and personnel transport (see Figures 1-5 through 1-8). When not in

use, the mobile equipment is parked along the entries and special alcoves primarily in the north end of the shaft pillar area.

The use of underground liquid-fueled vehicles/equipment within 25 feet of the Waste Face shall be controlled.

The UNDERGROUND liquid-fueled vehicles SHALL be designed to prevent and/or mitigate fires. The design includes fuel tanks and fuel delivery systems within the metal body of the vehicle, metal hydraulic fluid reservoirs and reinforced hydraulic delivery systems. **[TSR DF 6.6]**

Attributes of the liquid-fueled vehicles/equipment selected for use SHALL be verified PRIOR TO USE as follows:

- VERIFY that there are no excessive leaks (i.e., battery compartment, hydraulic lines, fuel lines) as indicated by visible flow of fluid under pressure, puddles beneath the equipment, or abnormal loss of hydraulic fluid;

- Fluid levels (i.e., engine oil, transmission fluid, hydraulic fluid and brake fluid)

- Lights and horn are IN-SERVICE. **[TSR SAC 5.1.1.2]**

1.5.1 Continuous Mining Machines

Continuous miners are crawler mounted machines with revolving cutter heads to provide continuous excavation. As the operator advances the cutter, the mined salt is picked up by a loading apron and transferred through the machine chassis by a chain conveyor to a haulage machine. Drum type miners use cutting bits mounted on a drum shaped head rotating from top to bottom. Continuous drum miners raise the cutter head to a desired height, advance, and lower the drum while shearing down until the bits reach the desired floor level. Other type miners use a boom mounted cutter head that rotates axially. Continuous miners are typically powered with trailing cables from a 600 to 1000 volt portable power center mounted on skids.

1.5.2 Underground Haulage Vehicles

Two types of salt haulage vehicles are used: dump truck units and load/haul/dump units. These are self propelled, diesel powered, and rubber tired. These vehicles are articulated to permit tight cornering and easy positioning behind the mining machines.

1.5.3 Dump Truck Units

A typical dumping truck has a load carrying box dumped by means of a hydraulic cylinder. The operator cab is located in the front of the unit. At WIPP, these trucks have about a ten ton salt capacity.

1.5.4 Load/Haul/Dump (LHD) Units

These units have front mounted scoop buckets operated by hydraulic cylinders. The operator cab is mounted on the side of the unit facing toward the center of the truck to ease operator control in either direction. The LHDs have various capacities in the range of 3 cubic yards.

1.5.5 Personnel Vehicles

The personnel vehicles are storage battery electric powered, rubber tired vehicles with various personnel capacities. These carriers may be custom equipped for specialized usage by mechanics, electricians, or technicians as required.

1.5.6 Special Mobile Equipment

Other equipment can include the following:

- Roof bolting machines
- Scaling machines
- Ambulance
- Supply trucks and utility trailers
- Fire/Rescue trucks
- Lubrication trucks
- Mobile temporary roof support devices
- Fork lifts
- Scissor lift platform trucks
- Drills
- Diesel powered generators
- Portable power centers

The list of the mobile equipment inventory is subject to change and is provided and maintained current in the WIPP Equipment Register.

1.6 AU05 - Underground Diesel Fuel

This system provides facilities for underground receipt, storage, and supply of diesel fuel for the diesel powered underground mobile equipment (see Figure 1-9). The fuel station is located in the W170 entry (drift) near the intersection with the N150 entry. This fuel station is situated in an alcove off the exhaust air entry so that any fumes venting from the station will not enter operating areas of the shaft pillar area.

Skid mounted tanks of up to 300 gallon capacity are provided to convey diesel fuel to the underground fuel station. The tank cover has openings for filling and venting. Lifting lugs may be installed on the tanks.

The dispensing equipment includes a fuel transfer pump to fuel the underground diesel powered equipment at the underground station(s) directly from the 300 gallon skid mounted tank.

Typically these stations will be enclosed with walls/door that are fire resistant and the active tank will be connected to a dispenser outside the door. A fire extinguishing system is available to provide protection over the entire fuel transfer area under system FP00.

Spill containers with sufficient capacity to hold the contents of the fuel tanks are maintained in a clean condition beneath each fuel tank. In addition, an air inlet from the passage allows fresh air to enter the station, while an exhaust vent duct conducts air from inside the station containment to the exhaust air passage.

1.7 AU06 - Underground Ground Control

This system encompasses the components for the ground support program in the underground. Ground control components may include rock bolts, cable slings or lacing, friction rock stabilizers, cribbing, and mesh. Because salt creeps when subjected to load, once an opening is made, a continuous process of deformation and associated fracturing is initiated. Through time, the openings deteriorate and ground control systems are designed and installed to maintain safety and operational utility by controlling developing instabilities.

The ground control program provides routine monitoring and evaluation of ground conditions in the underground. The program is designed to detect conditions that indicate instability and initiate corrective action.

> A program SHALL be established, implemented and maintained to initiate remedial action for unstable ground conditions and to characterize, monitor, and trend salt behavior. Ground control inspections SHALL be conducted WEEKLY. **[TSR SAC 5.1.1.3]**

1.8 AU07 - Geomechanical Monitoring

This system provides the data required to evaluate the geotechnical environment present in the underground facility. Measurements associated with rock mechanics are regularly made, as excavation proceeds, so as to ensure the safety and effectiveness of both present underground operations and long term disposal. Geomechanical monitoring carried out in support of specific Sandia National Laboratory experimental activities may not be included in this subsystem.

The primary function of the Geomechanical Monitoring System is to provide data:

- To evaluate the geotechnical performance of the underground facility.
- To develop techniques for the excavation configuration, modifications, and use of the underground site for waste disposal and retrieval, if required.
- To develop improved characterization of phenomena related to rock fracture development, brine seepage and the geology of the Los Medanos area.
- To detect conditions that could affect operational safety of the facility.

The geomechanical instrumentation provides data necessary to characterize conditions, confirm design assumptions, and understand and predict the performance of the underground excavation during the day to day operations. In carrying out the above program, the system provides data for:

- Early detection of conditions that could affect operational safety.
- Evaluation of room closure.
- Guidance for design modifications and remedial actions.
- Data for interpreting the behavior of underground openings in comparison with established design criteria.

Two systems for remote data acquisition are being used. The Geotechnical Instrumentation System (GIS) is basically distributed as shown in Figure 1-10. The data logging equipment is installed on the surface. The data link cable enters the underground and connects to local termination cabinets (LTC) in the shaft and throughout the U/G horizon. Since the WIPP shafts and the mined horizon are dynamic areas (deteriorating, moving, being excavated, abandoned, etc.), the number and type of sensors are continuously changing.

The second system for remote data acquisition is the Ground Control Monitoring System (GCMS). The data acquisition system equipment is located on the surface. A fiber optic data link connects the surface equipment to the main underground components.

Sensors are connected to the GCMS through programmable accessors or data loggers which are connected to trunk cables running throughout the underground. Instrumentation can readily be added to the system simply by connecting an accessor to the trunk cable at the instrument location.

To supplement this installed instrument system, manual geomechanical measurements are made with portable equipment.

Installed instruments are grouped in the following areas:

- Shafts
- Access Drifts
- Test Rooms and Experimental Area
- Waste Disposal Area

1.8.1 Shafts

The Salt Handling Shaft has piezometers installed in the first 850 feet behind the steel liner to measure water pressure. Both spot welded strain gages and concrete embedded strain gages are located in the concrete key at two different elevations. These measure the strain in the steel lined concrete key. Earth pressure cells have been installed behind the concrete key to measure the creep effect of the Salado Formation on the concrete key. Multiposition extensometers are installed to a depth of 36 feet into the rock in three quadrants of three levels in the lower unlined shaft section.

The waste shaft instrumentation includes a dozen piezometers located around the concrete lined shaft from the surface through the concrete key, all in the Rustler Formation. Two of the levels are in the Magenta and Culebra Dolomite Members. Behind the key are earth pressure cells. From the key to the mine, there are three levels of three extensometers. Each of the multi-position extensometers extend up to 36 feet into the rock.

In the Exhaust Shaft, twenty one piezometers are installed behind the concrete liner from 544 feet down to and including the shaft key. As with other shaft keys, earth pressure cells have been located between the concrete and the Salado Formation to measure the stress as the creep effect loads the key structure. A group of three multi-position extensometers are located at three levels and extend 36 feet into the Salado Formation.

Convergence points were installed in the lower half of the Salt Handling and Waste Handling shafts but are not read because of access, obstruction, and safety concerns. No convergence points are installed in the Exhaust Shaft.

1.8.2 Access Drifts

The access drifts cover most of the mined area from N1420 to S3650 and E300 to W920. Convergence points, borehole extensometers, and other instrumentation are installed at various locations to monitor the excavation deformation.

1.8.3 Tests Rooms and Experimental Area

This area includes the Site and Preliminary Design Validation Rooms (SPDV) and the Sandia National Laboratory experimental rooms. The four SPDV test rooms are located between N1100 and N1420 with room 1 at W230 and room 4

at W600. The experimental area is located in the east section between N1100 and N1420. Some remotely read instrumentation is installed in SPDV Room 4, Room D, and the access drifts. Remote reading continues as long as useful data can be obtained.

1.8.4 Waste Disposal Area

The waste disposal panel rooms and access drifts are monitored using borehole extensometers and convergence points. Additional instrumentation is installed in various locations to monitor areas of deteriorating ground or installed ground support systems. Future disposal panels will have a minimum of one borehole extensometer installed in each room to monitor roof deformation at the center of the room.

1.9 AU08 - Underground and Surface Surveying

The Surveying Program provides surveying services and information to any section or group within the WTS Engineering Department for planning, engineering and/or documentation purposes. The Surveying Program also provides basic information to other WTS sections and departments so that the safe disposal of transuranic (TRU) and mixed waste can be demonstrated both in the short-term (during the operational life of the facility) and in the long-term (following decommissioning), while satisfying all regulations governing permanent isolation of the waste. The program provides construction surveying for WTS engineering, planning, and documentation purposes, but does not include construction surveying for contractors. Drivers for this program include the Compliance Certification Application, the Occupational Safety and Health Act, and the Mine Safety and Health Act. The program also helps enable the facility to operate safely and ensures the data is available to make decisions for managing and performing engineering and operational activities. All surveying activity is controlled by a Surveying Program that describes the general scope of the survey, its methodology, and quality assurance (QA) requirements.

To satisfy the listed regulatory drivers, certain activities and functions are required of the Underground and Surface Surveying System. These commitments are listed as follows:

- Perform an annual subsidence monitoring survey
- Publish an annual report of subsidence survey data, including a comparison with prior years data
- Maintain, replace, and expand the subsidence monument network, as required
- Maintain state-of-the-art leveling equipment and capability

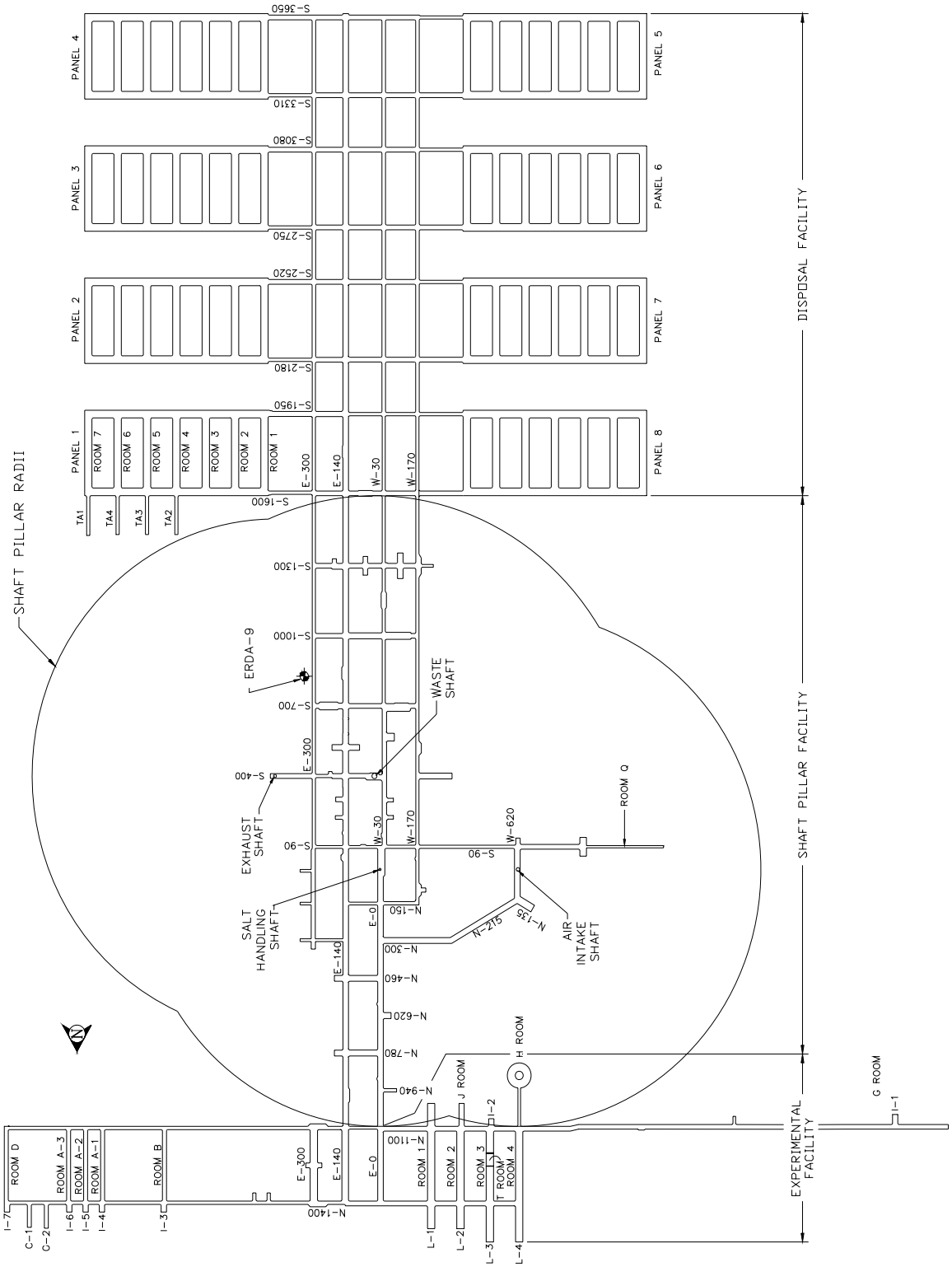

Figure 1-1 - Underground Excavations

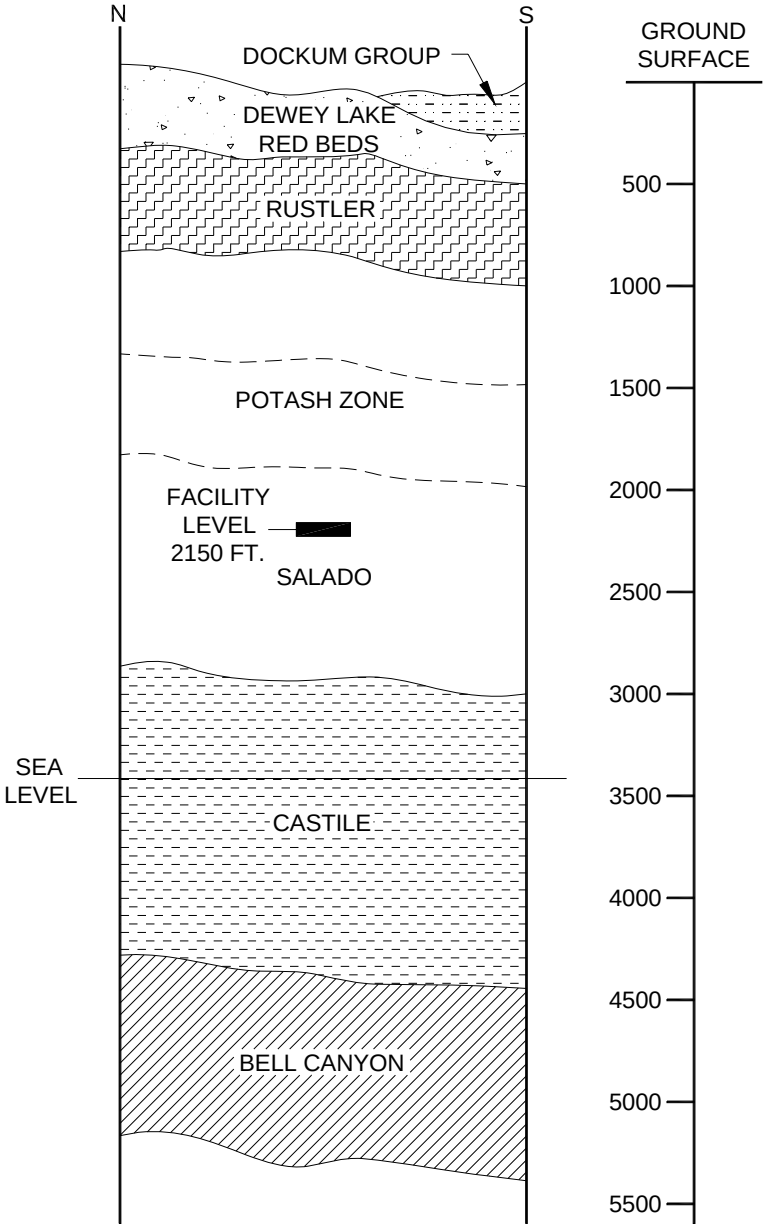

Figure 1-2 - Generalized Site Stratigraphy

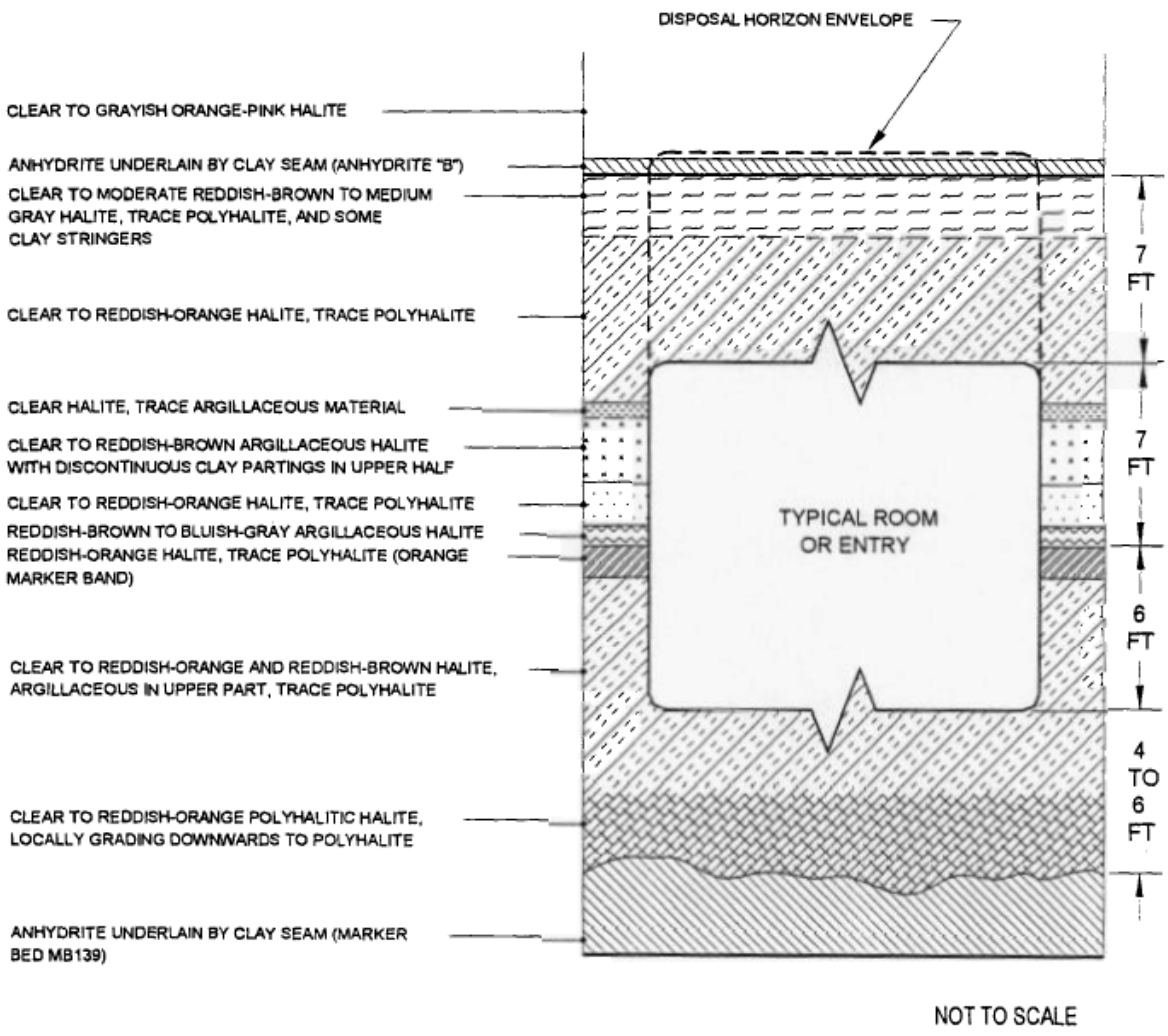

Figure 1-3 - Stratigraphy of the WIPP Repository Horizon

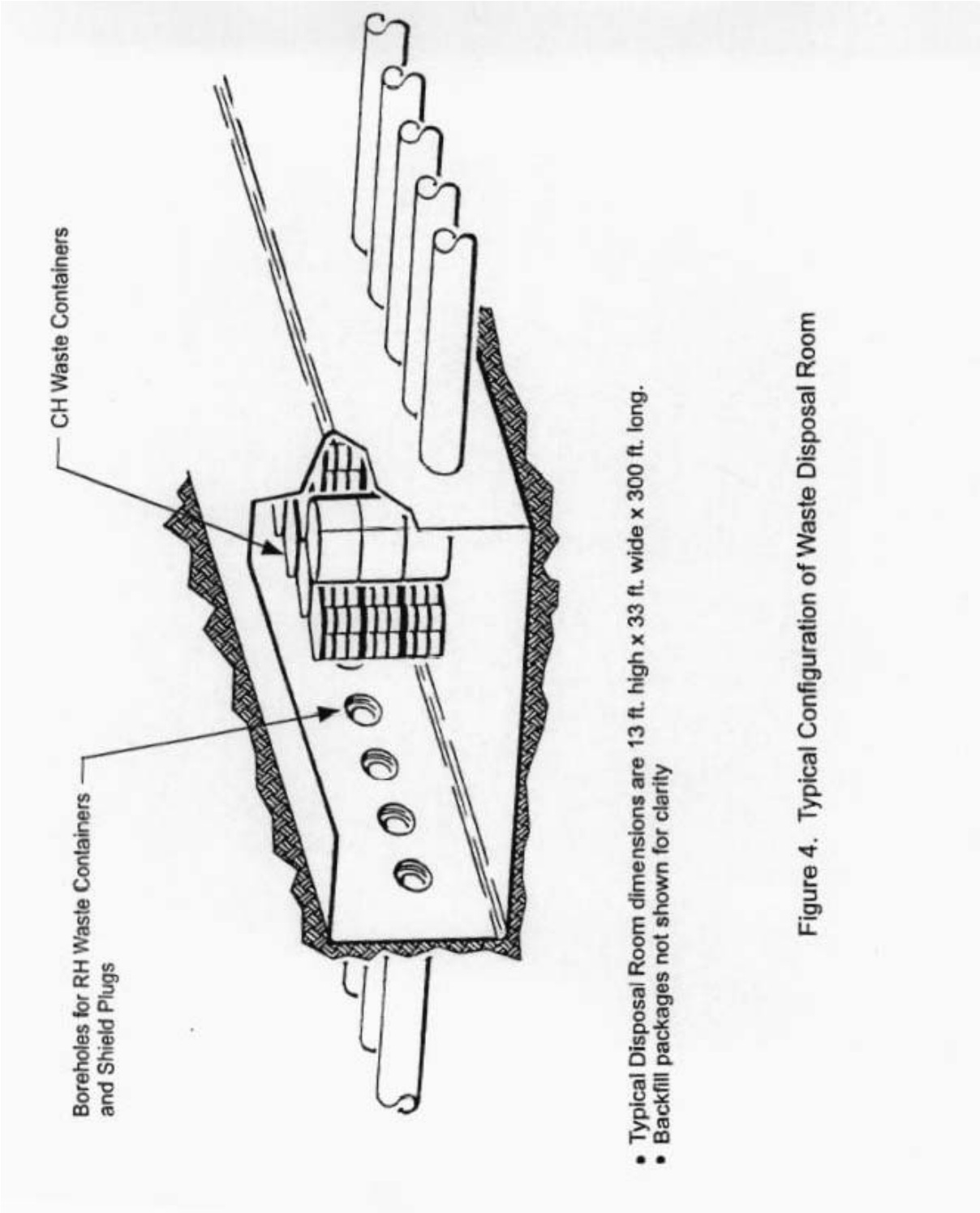

Figure 1-4 - Typical Configuration of Waste Disposal Room

Working Copy

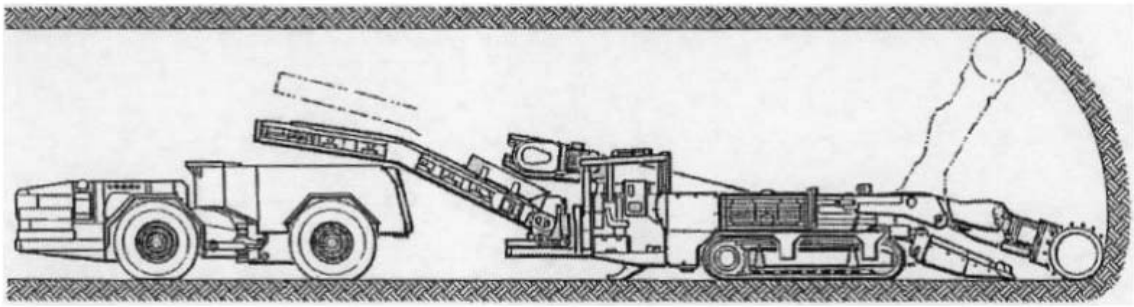

Figure 1-5 - Typical Drum Mining Machine

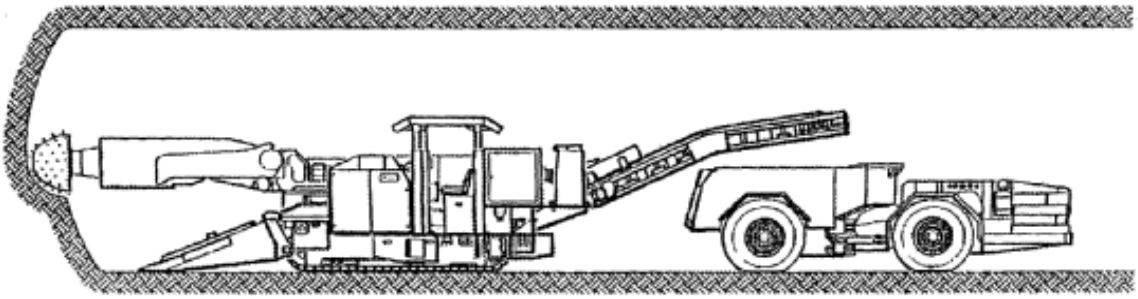

Figure 1-6 - Typical Boom Type Mining Machine (Roadheader)

Working Copy

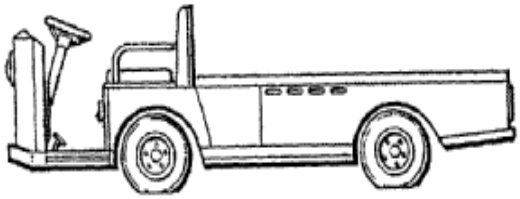

Personnel / Utility Carrier

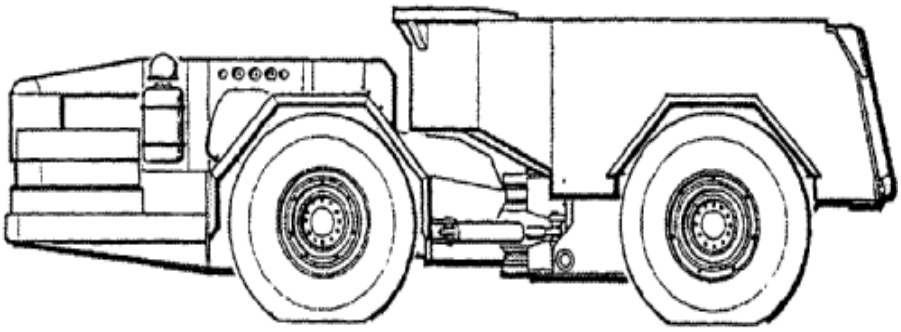

Underground Dump Truck

Figure 1-7 - Typical Underground Equipment

Working Copy

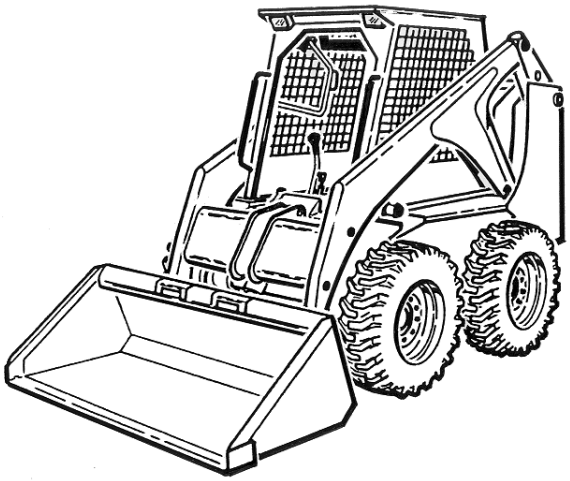

Skid Steer Loader

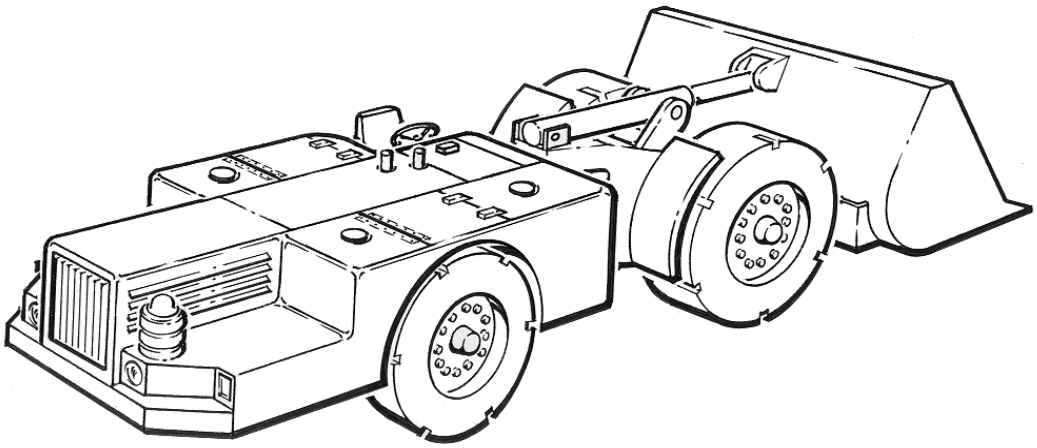

Load Haul Dump (LHD) Unit

Figure 1-8 - Typical Mining Equipment

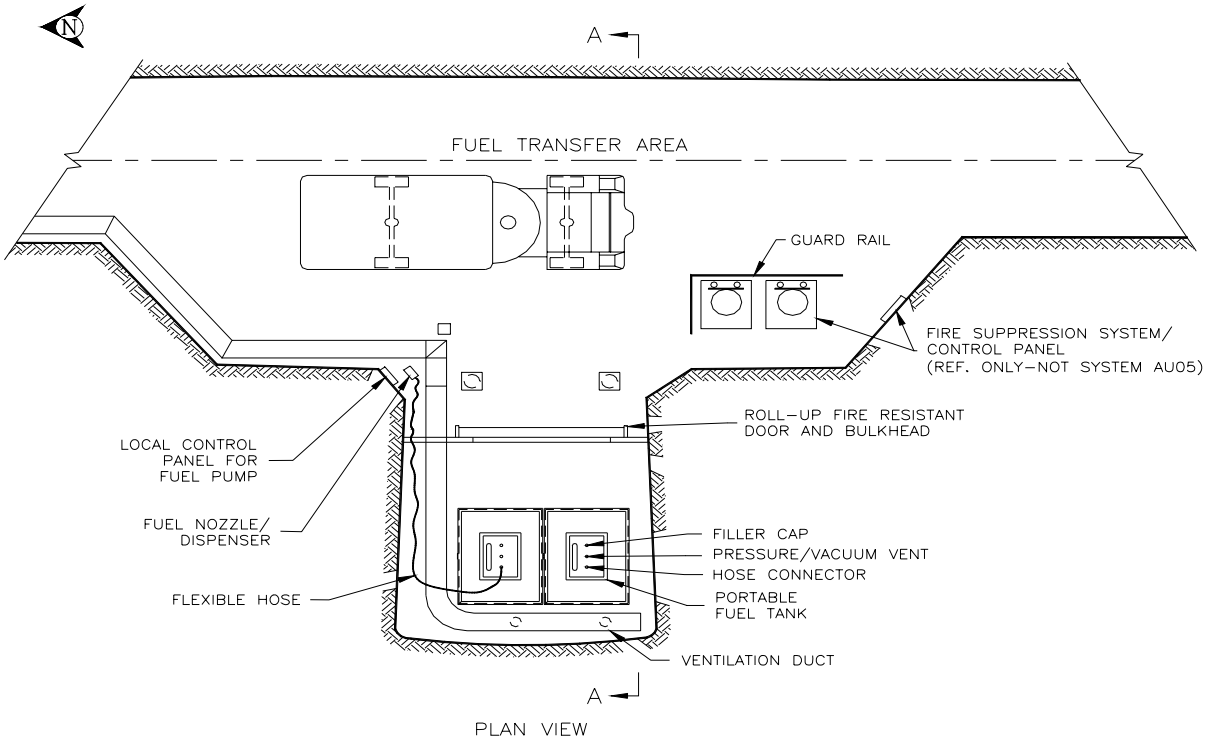

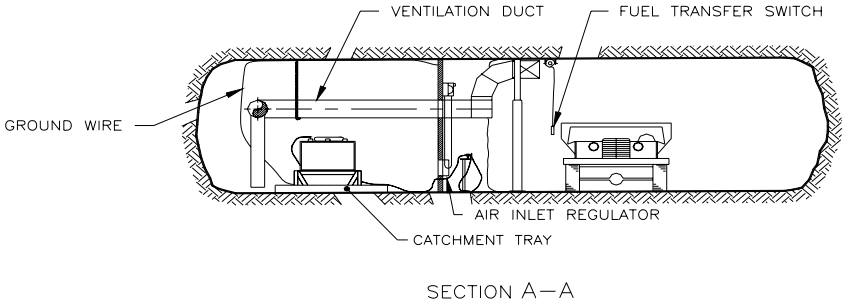

Figure 1-9 - Underground Fuel Storage Area

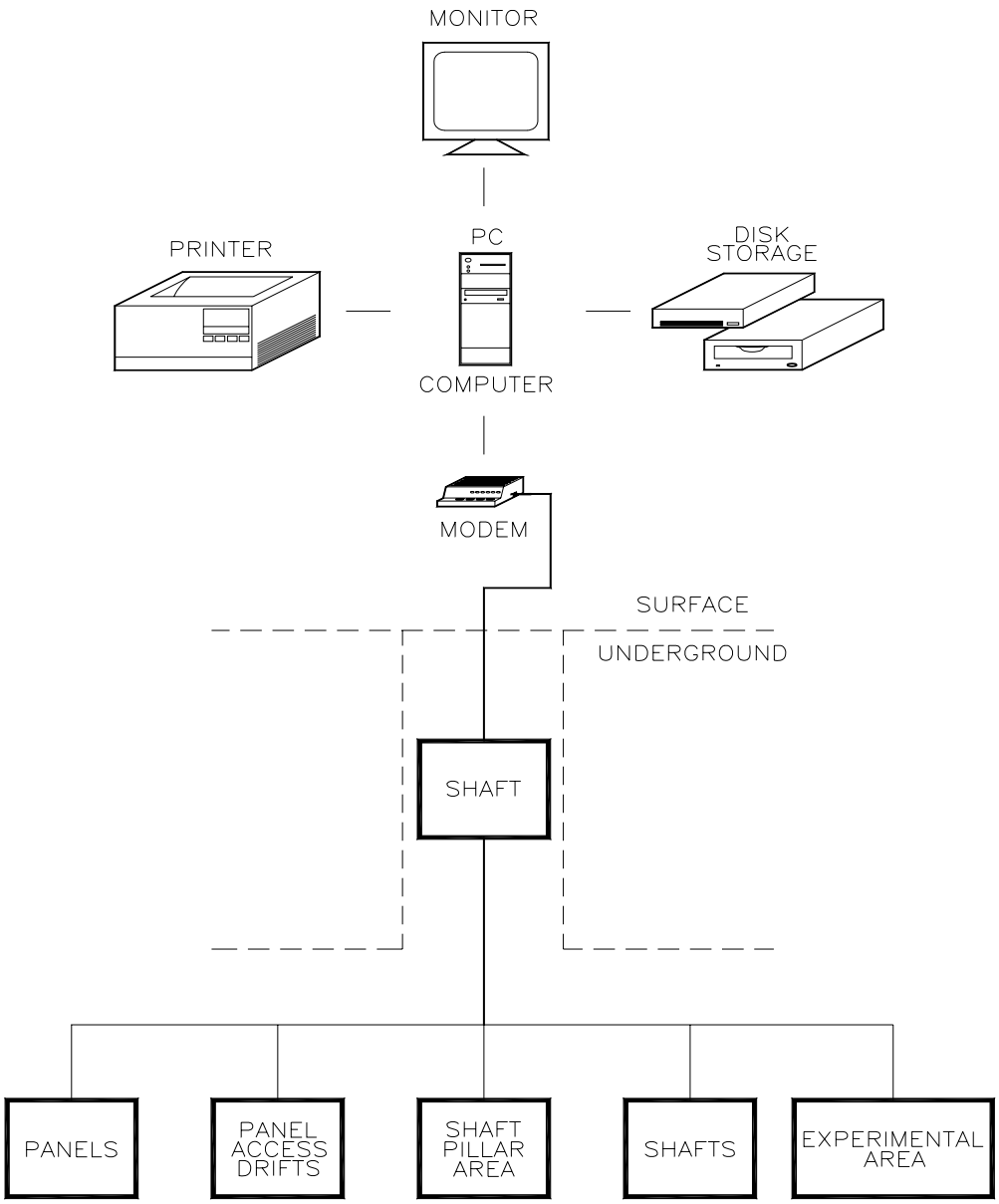

Figure 1-10 - Geomechanical Monitoring Schematic

Working Copy

2.0 DESIGN REQUIREMENTS

The functional classifications are defined in the Documented Safety Analysis (DSA) and the General Plant Design Description (GPDD).

2.1 AU00 - Underground Facilities and Equipment System

This system shall be designed in conformance with all federal and New Mexico state mining regulations. For facilities and equipment design considerations, the approximate working life of the underground facility is 25 years.

The underground WIPP facility in its construction and ground maintenance requirements is very similar to a commercial mine. Major differences exist, however in the WIPP's need for sensitive and expensive instrumentation in the underground. For example, the underground weather stations, seismic monitoring, radiological monitoring, geomechanical monitoring, hoisting systems, and ventilation facilities (airlocks and dampers) that control and maintain the required differential air pressure balances. Some sensitive experimental efforts also continue including neutrino studies. For these reasons, mechanical mining is used at the WIPP and drill and blast type mining is generally prohibited. Specialized blasting for specific projects may be authorized if effects to other systems can be mitigated.

The U/G Facilities and Equipment system shall be designed in conformance with 30 CFR Part 57 as a category IV facility. The salt in place for the design of the underground facilities shall be assumed to have a density of 135 lb/ft^3 (or 1.8225 tons/yd^3). Excavation dimensions shall include an allowance for salt creep in the vertical and width dimensions of all rooms. In rooms and crosscuts where creep is accelerated by thermal loading, and in rooms and entries which must remain open for longer than 5 years, periodic re-mining or scaling of the floor and back and ribs may be necessary to maintain the minimum operating dimensions and clearances.

The design of the mine is such that no more than one inch surface subsidence within 500 feet of the waste shaft should occur. This condition shall be surveyed and documented yearly in a report of the annual subsidence monument monitoring survey.

For the continuous miner excavation, the tolerance for excavation of the wall and roof surfaces and the floor elevation will be normally -0 to +6 inches. These tolerances shall be adjusted where required to provide safe travelways and openings. The finished cross section dimensions shall not be less than the design dimensions of the applicable drawing(s).

The nominal design size for each underground opening will comprise the smallest dimensions that are practical and consistent with the facility needs. Determination of this cross-sectional size will consider; 1) use of the opening,

2) ventilation carrying requirements, 3) equipment access requirements, and 4) potential geotechnical stability.

A precision survey and coordinate location system shall be established to permit surveying initial construction, rock movement, and precise locations of waste containers. The location system shall be tied into the permanent location monuments on the surface and carried underground in two or more shafts. Multiple traverse stations shall be established at the underground level.

A closed traverse to the Second Order accuracy Class II shall be made from the underground to the surface monuments. Thereafter, the underground traverse stations and the surface monuments shall be resurveyed at intervals determined by the pattern of salt creep and the operating contractor.

The structural design requirements prescribed below apply to the buildings and facilities below ground, with the exceptions of the shafts and underground excavations. Structural design criteria are defined in terms of 1) design loadings, and 2) loading combinations.

2.1.1 Design Loadings Requirements

Design loads in value or magnitude includes those as specified in The Uniform Building Code (UBC). Design considerations as set forth in 30 CFR 57, Federal Metal and Nonmetallic Mine Safety and Health Regulations (MSHA), 29 CFR 1910, Occupational Safety and Health Standards for General Industry, and 29 CFR 1926, Safety and Health Regulations for Construction (OSHA) are also utilized. These are applied to reinforced concrete, steel, and preengineered metal structures as related to loading combination criteria.

Preengineered metal buildings shall meet or exceed the following requirements:

- Designed in accordance with the Metal Building Systems Manual of MBMA.
- Design loads shall comply with ANSI-A58.1.
- Designed for seismic load in accordance with UBC provisions for Seismic Zone 1. Reference SDD-CF00 for seismic analysis requirements when required.

In lieu of preengineered metal buildings, Connex containers (ISO-standard ocean cargo containers) may be converted and used for portable office and storage facilities.

2.1.2 Concrete

Portland cement conforming to ASTM C150, Type V shall be used for underground structures. Concrete of 4,000 psi compressive strength (f_c') shall be

Working Copy

used, with the only exception being the shaft lining. For shaft lining and shaft key, the concrete shall be of 5,000 psi compressive strength. Concrete pads used for ground leveling and smoothness in office spaces, shops, and for equipment may be Type II cement with lesser compressive strength values as appropriate.

2.1.3 Concrete Blocks

The ultimate compressive strength of concrete block masonry units (f_m') shall be as follows:

A.	Solid units:	1,500 psi
B.	Hollow Units:	1,350 psi

For particular structural and nonstructural purposes, blocks of different strengths and material may be used when applicable.

2.1.4 Reinforcing Steel

Reinforcing steel shall be ASTM A615, Grade 60, except for #3 reinforcing bars which may be Grade 40. Rebars bending and splicing requirements shall be in accordance with ACI-318. For #14 and #18 rebars, mechanical butt splicing shall be used. Welded wire fabric shall conform to ASTM A185. Welding on reinforcing steel shall conform to AWS-D1.4.

2.1.5 Structural Steel

Structural steel shall be of ASTM A36. Bolts shall be of A307, Grade A. High strength bolts shall be of ASTM A325, Type 1. Welding of structural steel shall conform to AWS-D1.1.

2.1.6 Stainless Steel

Type 304L stainless steel shapes and plates shall conform to ASTM A276 and ASTM A167, respectively. Stainless steel bolts shall be of ASTM A193, Grade B, Class 1.

2.1.7 Anchor Bolts (exclusive of ground support materials)

Anchor bolts shall be of ASTM A36 or A307, Grade B.

2.1.8 Applicable Codes and Standards

Listed below are the codes, standards, regulatory requirements, and DOE Orders that are to be applied to the design, construction, testing, and operation of the Underground Facilities and Equipment, as applicable.

Number	Title
DOE/CAO-94-1012	Quality Assurance Program Description
DOE HDBK-1090-07	DOE Handbook - Hoisting and Rigging
30 CFR Part 57	MSHA Health and Safety Standards for Metal and Non-Metallic Underground Mines
29 CFR Part 1910	Occupational Safety and Health Standards
29 CFR 1926	Safety and Health Regulations for Construction
40 CFR Part 401	Protection of the Environment
UBC	Uniform Building Code, 1982
NM Mine Safety Code	New Mexico Mine Safety Code for All Mines, The State Inspector of Mines.
ACI 318-77	Building Code Requirements for Reinforced Concrete
AISC M011-80	Manual of Steel Construction, Eighth Edition
AISC S326-78	Specification for the Design, Fabrication, and Erection of Structural Steel for Buildings
ANSI A58.1-1972	Minimum Design Loads for Buildings and Other Structures
ANSI A92.5	Boom - Supported Elevating Work Platforms
ANSI C2-1993	National Electrical Safety Code
AWS D1.1-1982	Structural Welding Code - Steel
AWS D1.4-1979	Structural Welding Code - Reinforced Steel
ASTM A36-81	Standard Specification for Structural Steel
ASTM A167-81	Standard Specification for Stainless and Heat Resisting Chromium-Nickel Steel Plate, Sheet, and Strip
ASTM A185-79	Standard Specification for Steel Welded Wire Fabric, Plain, for Concrete Reinforcement
ASTM A193-81	Standard Specification for Alloy-Steel and Stainless Steel Bolting Materials for High-Temperature Service
ASTM A276-81	Standard Specification for Stainless and Heat Resisting Steel Bars and Shapes
ASTM A307-80	Standard Specification for Carbon Steel Bolts and Studs, 60,000 PSI Tensile Strength
ASTM A325-81	Standard Specification for High-Strength Bolts for Structural Steel Joints
ASTM A615-82	Standard Specification for Deformed and Plain Billet-Steel Bars for Concrete Reinforcement
ASTM C150-81	Standard Specification for Portland Cement

Number	Title
ASTM F432-95	Standard Specification for Roof and Rock Bolts and Accessories
ASME B56.1	Low Lift and High Lift Trucks
ASME B56.6	Rough Terrain Forklift Trucks
NFPA 10	Standard for Portable Fire Extinguishers
NFPA 17	Standard for Dry Chemical Extinguishing Systems
NFPA 30	Flammable and Combustible Liquids Code
NFPA 70	National Electric Code
NFPA 101	Code for Safety to Life from Fire in Buildings and Structures
NFPA 386	Standard for Portable Shipping Tanks for Flammable and Combustible Liquids
NFPA 505	Fire Safety Standard for Powered Industrial Trucks Including Type Designations, Areas of Use, Maintenance, and Operation
SAE J 321B	Tire Guards for Protection of Operator of Earthmoving Haulage Machines, Recommended Practices
UL 583	UL Standard for Safety Electric-Battery-Powered Industrial Trucks

2.2 AU01 - Underground Experimental Facilities

The system design for the experimental programs shall be configured and prepared in accordance with requirements and instructions provided by or through the DOE. The design shall allow for access to and utilization of the experimental areas without interruption to excavation or emplacement operations during the operational phase of the WIPP.

2.3 AU02 - Underground Disposal Facilities

The system design shall provide the space and configuration necessary to support the disposal of waste. The design shall:

- Permit the simultaneous disposal of CH and RH waste.
- Provide the capability of retrieving the emplaced CH and RH waste.
- Store 6.2 million cubic feet of CH waste and 250,000 cubic feet of RH waste (Original design estimate - these figures may vary due to evolutions in packaging design).
- Provide eight disposal panels with seven rooms in each with the panels separated from each other and the main entries by nominally 200-feet pillars. Additional equivalent volume of two disposal panels is available in the disposal area access and ventilation entries.

Working Copy

- Provide the panel rooms to be nominally 33 feet wide by 300 feet long separated by 100-feet-wide pillars and connected by 33 feet wide access drifts.

- Consider roof stabilization of rooms where necessary.

- Provide all waste disposal areas with a uniform height of nominally 13 feet in all entries, crosscuts, sub-entries, and rooms. However, the height of disposal areas must also consider a variety of waste packaging and emplacement arrangements.

- Provide space and adequate access for the underground equipment and temporary storage space to support underground operations.

2.4 AU03 - Underground Shaft Pillar Facilities

For design considerations, an exploration borehole from the surface (ERDA-9) bypasses the WIPP underground facility in the shaft pillar area. Its location is approximately 90 feet east of E300 drift between S700 and S1000. This area is off-limits for horizontal longhole drilling and/or mining activities.

The system design shall provide the entries, pillars, space, and necessary facilities to maintain and support an efficient underground operation by the underground work force. This design shall include:

- Portable buildings for offices.

- Emergency vehicle parking areas with space for an ambulance and a fire fighting/rescue vehicle.

- Space for mechanical and electrical shops for performing routine maintenance and repair of underground equipment.

- Space and equipment for portable toilet facilities located at suitable locations in the underground based on the number of personnel and operations being carried out.

- Lunch rooms.

- Battery charging stations

- Space for underground fuel storage and fueling station

- Space for system ED00 underground electrical substations

- Staging areas.

- Two or more properly maintained escapeways from the underground areas to the surface as required by MSHA

- Entries and sub-entries to the underground disposal area and the experimental areas. These entries and sub-entries shall be sized for personnel safety, adequate air flow, and space for equipment.

- Four parallel entries from the shafts to the waste disposal area. The entries shall be separated by pillars over 120 feet wide. Crosscuts shall be provided at nominally 200-to-300-foot intervals. The four entries shall provide air flow as required by system VU00.

- Excavation within the shaft pillar area shall be the minimum required to meet the operational and safety requirements of the experimental and waste disposal areas.

2.5 AU04 - Underground Mobile Equipment

This system shall be designed and provided to meet the following requirements:

- Underground noncombustible, non-gassy (Category IV) mine use meeting all applicable federal and State of New Mexico regulations.

- Manufacturers' standard equipment and vehicles shall be used and/or modified as necessary to meet mining requirements.

- The equipment and vehicles must be capable of being disassembled and lowered into the mine if their size prohibits lowering in one piece in the waste handling conveyance.

- Traction power will normally be by diesel engine or electric motors energized from batteries or site electric power using trailing cables. No gasoline powered equipment shall be used in the underground. Some mining equipment may also use and be propelled by pneumatic power.

- Auxiliary drives are normally powered by electric motors or hydraulic powered units with prime power from the equipment or vehicle diesel engine or site electric power using trailing cables.

2.6 AU05 - Underground Diesel Fuel

This system shall be arranged to provide diesel fuel for the underground mobile equipment safely by using a fire barrier in conjunction with the ribs of an underground recess to isolate a fire in or around the fuel tank(s) as well as to protect the diesel fuel tank from fires associated with the refueling operation as

Working Copy

shown in Figure 1-9. This system shall be designed and provided to comply with the following requirements:

- 30 CFR 57 Subpart C Mine Safety and Health Administration Federal Mining Code for Metal and Non-Metallic Underground Mines.
- The floor of the fuel storage area shall be provided with spillage catchments of equal or greater capacity than the tanks so that spillage may be removed for proper disposal.
- A vent line shall be provided to vent any fumes to the exhaust entry.
- A dry chemical fire extinguishing system provided by system FP00 shall be installed to protect the overall fueling area.
- Portable fuel tanks are to be constructed in accordance with NFPA 386.
- The fuel transfer pump shall be electrically operated and UL listed.

2.7 AU06 - Underground Ground Control

This system design shall provide a concerted and centralized activity with responsibility to ensure maintenance of safe conditions for personnel and equipment. A comprehensive ground control plan shall be developed and followed in all areas of the underground facility to ensure maintenance of safe conditions.

The objective of ground control is to provide safe, geotechnically stable access for personnel and equipment while maintaining disposal capabilities. The options available to meet this objective involve providing internal support (e.g., bolts of various kinds), external support (e.g., cribs), or removing the ground (e.g., scaling loose ground or mining the roof beam). With regard to ground control systems, selection is based on several criteria, which include the following:

- Planned life of the area to be supported.
- Degree of ground deterioration.
- Current or planned use of the area.
- Time and cost associated with installation or implementation.

All ground control options must comply with 30 CFR 57 Subpart B "Ground Control." This code references ASTM F432-95 "Standard Specification for Roof and Rock Bolts and Accessories." All applicable support system components used at the WIPP must meet this code.

Specific considerations and design requirements for WIPP ground control systems are as follows:

- The support system must support the deadweight load of any detaching ground.
- The support system must accommodate continued area operation or use.
- Any yielding component of a yielding support system should be capable of being monitored.
- The support system should be capable of being monitored for component failure.
- The design should consider vertical and horizontal ground movement.
- The design should consider potential corrosion effects.
- The design should consider economics between multiple alternatives.

There are no general design requirements for removing ground. Each area should be considered uniquely and analyzed based on stratigraphy, geology, history, geomechanical response, use, and currently installed support. In addition, fracture patterns and fracture extent must be considered.

2.8 AU07 - Geomechanical Monitoring

The design of the Geomechanical Monitoring system shall comply with DOE Order 5480 with regard to Environmental and Safety requirements. It shall satisfy requirements of the Mine Safety and Health Administration Title 30 CFR Part 57. The revision of these codes in effect at the time of design or design change shall apply.

Equipment assemblies and parts shall be commercially available, interchangeable, and standard products to the maximum extent possible. Electrical systems and equipment shall be in conformance with the National Electrical Code (NFPA 70), National Electrical Safety Code (ANSI C2), and other applicable electrical standards. Electrical and instrumentation equipment shall be suitable for operation from electrical power sources rated: 120 V AC ± 10% 60 Hz ± 2.2% 1 phase.

Geomechanical instrumentation shall be provided to measure the cumulative deformation of the rock mass surrounding mined drifts and of the walls, floors and ceilings of the mined drifts. Methods of measurement shall include, but not be limited to, borehole extensometers, convergence points (eyebolts anchored in the rock), and convergence meters.

Instrumentation shall be provided to monitor the liners, keys and surrounding rock structures associated with the main shafts of the WIPP facility. In order to ensure the soundness and functional integrity of the features, measurements shall be taken of lithostatic pressure, concrete stress and ground water pressure.

The number and location of measurements will vary as the need for additional underground space requires the mining of additional drifts. The number and location of measurements will also vary as new data will be required to test new theories on the performance of the underground. Measurement locations in the operational phase shall be such that the data can be correlated with data taken during the preoperational phase.

Geomechanical measurement data shall be digitally transmitted and recorded, to the maximum extent possible, to a central data acquisition system for storage and analysis. The digital records shall be in the form of a database for ease in accessing and analyzing the data.

2.9 AU08 - Underground and Surface Surveying

Design requirements for this system are encompassed by the requirements of two separate disciplines. One being the accuracy of the surveys performed. The other being the drivers that require particular surveys. Accuracy of surveys is further divided into standards for horizontal surveys (location of points on a surface) and vertical surveys (the elevation above or below a particular point).

Accuracy standards for surveying are controlled and mandated by the Federal Geodetic Control Subcommittee (FGCS), a division of the U.S. Department of Commerce. The Second Order, Class II degree of accuracy is the standard recommended for the type of surveying performed at the WIPP by the FGCS for both horizontal and vertical surveys. It was also established as such by the original design basis documents and is carried through into this SDD. All WIPP surveying must meet or exceed the standards for Second Order, Class II results. The FGCS standards are published in; Classification, Standards of Accuracy, and General Specifications of Geodetic Control Surveys, Federal Geodetic Control Committee, 1975 (1980 reprint).

The drivers for particular surveys at the WIPP include the Compliance Certification Application, the Occupational Safety and Health Act, and the Mine Safety and Health Act. To satisfy these regulatory drivers the following activities and functions are required:

- Perform an annual subsidence monitoring survey.
- Publish an annual report of subsidence survey data including a comparison with prior years data.
- Maintain, replace, and expand the subsidence monument network, as required.

- Maintain state-of-the-art leveling equipment and capability.
- Maintain current and accurate mine maps.

3.0 SYSTEM OPERATION AND PRECAUTIONS

3.1 AU00 - Underground Facilities and Equipment System

This section describes the operating methods and requirements for startup operations, normal operations, infrequent operations, and shutdown operations. All operations shall comply with the requirements of 30 CFR 57. The underground facility and structures are effectively passive and require no operating procedures. Off-normal events and recovery are denoted under the subject subsystem, as applicable.

3.2 AU01, AU02, AU03

- AU01 - Underground Experimental Facilities
- AU02 - Underground Disposal Facilities
- AU03 - Underground Shaft Pillar Facilities

Any operations associated with passive facilities and equipment are described in the active interfacing systems SDDs (Appendix B, Interfacing Systems). Underground Experimental Facilities (AU01), Underground Disposal Facilities (AU02), and Underground Shaft Pillar Facilities (AU03) are passive systems and do not have associated operation methods and requirements.

Due to the unique nature and mission of the WIPP, continuous geomechanical monitoring is performed to prevent unexpected off-normal ground movement or mining conditions. Visual inspections are always performed prior to work commencing in any area. Any emergency must be reported to the CMR and evaluated for possible activation of emergency response action.

For these three systems, the only events that can be considered off-normal would be unpredicted ground movement or roof fall, seismic occurrence, or a major outburst of pressurized air, rock, or brine.

Upon occurrence of any of these events, emergency response to safeguard personnel would be initiated, a safety evaluation would be performed, and a plan of recovery would be developed and adopted.

3.3 AU04 - Underground Mobile Equipment

The mining, hauling, and openings maintenance equipment are considered powered mobile equipment. All operation of underground equipment will be

performed by trained and specific equipment qualified personnel. Emergency response vehicles and personnel vehicles are operated similar to the mobile mining equipment. For emergency vehicles, after each use, the vehicle and its equipment is returned to the preassigned parking locations and necessary maintenance is performed. The detailed operating and maintenance procedures are prepared and maintained by the cognizant operating and maintenance groups with concurrence from the cognizant engineer. Specific attention is given to the following:

- Manufacturers operating procedures and recommendations
- Federal Metal and Nonmetal Mine Safety and Health Regulations (30 CFR Parts 32, 48, and 57).
- Health and Safety Regulations for Construction (29 CFR 1926)
- New Mexico Mine Safety Code

Initial conditions for operation are established where applicable to the subject piece of machinery by the cognizant operating group. General items of consideration are as follows:

- Adequate ventilation is supplied to the work area (SDD-VU00), including ventilation tubing and auxiliary fans, if required.
- All equipment protective covers and/or guards are properly installed.
- All prestart-up checks are completed.
- Laser-light caution signs are available for posting when the laser is planned to be used.
- Unnecessary personnel are excluded from the area of operations.

Start-up of the specific piece of machinery is performed by following the step by step procedures as developed by the cognizant operating group and as enumerated in the applicable O&M manuals.

Normal operations are carried out per the instructions in the applicable O&M manual, operator training, and procedures as developed by the operating group with approval of the cognizant engineering group. Operation consists of the following:

- Movement of equipment to the work area.
- Cutting at the salt face.
- Pickup, transport, and unloading of payloads.

Working Copy

- Coordination of operations with other machinery in the area or with an overall observer.

- Drilling, bolting, scaling, mine maintenance, etc.

In the event of an emergency situation or an unknown condition, perform the following if applicable:

- Secure any suspended load.

- Place the equipment in a safe and stable condition.

- Activate the emergency shutdown device located on the machinery if equipped.

- Proceed in accordance with the underground emergency response requirements.

Shutdown of equipment should proceed per procedure and subject O&M manuals and cover the applicable items below:

- Move the mining equipment to a safe, secure area out of the way of other traffic.

- Position cutting, lifting, loading, and dumping devices in proper shutdown configuration (i.e., buckets lowered, forks lowered, lift beds lowered, etc.).

- Bleed off all hydraulic pressures.

- Lower stabilizers if so equipped and required.

Off normal events for AU04 equipment are covered in the individual O&M manuals for the subject equipment or are identified in the specific operating procedures or Job Hazard Analyses prepared by the cognizant operating group with guidance and concurrence of the cognizant engineering group.

3.4 AU05 - Underground Diesel Fuel

Fuel must be present in the fueling bay for initial operations. If no fuel is present, the portable tank(s) must be filled on the surface and transported to the underground fuel bay.

Operational procedures including state and federal regulations are developed by the cognizant operating group with concurrence from the cognizant engineer.

Three options for normal operations are available:

- Distribution of fuel from the portable fuel bay tank directly to the diesel operated vehicles.
- Placement of fuel tank(s) into the fuel station alcove for refueling vehicles when required. This involves enclosing the tank behind the bulkhead and ensuring ventilation and fire suppression. Complete connection of the filling hose to the tank and ensuring operation of the fuel shutoff.
- Filling of auxiliary tanks on a lubrication/fuel transfer truck from the fuel bay tank(s) for delivery and transfer of fuel to the underground mobile equipment on an as needed basis.

Refueling from the fuel bay is not a constant operating condition but occurs on an as needed basis. Therefore, for this subsystem infrequent operation is the same as normal operation.

Prior to removal of the mobile tank(s) to the surface, ensure the tank is secured/shut down so that no leakage can occur during the transport to the surface.

Off normal events similar to those described for subsystems AU01, AU02, and AU03 are included for this subsystem as well as a fuel leak. In the event that it is determined, using sight, installed instrumentation, and/or procedures, that a fuel leak exists, the following course of action shall be implemented:

- The leak must be terminated and contained
- Inform the proper state and federal authorities if required by environmental compliance procedures.

3.5 AU06 - Underground Ground Control

AU06 is not a subsystem that can be operated. After the installation of ground control devices, they are passive items accepting strain loads from their environment and supporting rock masses. Individual components in this system are subject to failure when overloads from ground pressures are experienced. When this occurs, these components are replaced as required.

3.6 AU07 - Geomechanical Monitoring

Electrical power must be available to the surface computer station and to each underground Local Termination Cabinet (LTC) to be used for data acquisition.

Normal operation requires no hardware manipulation. Software instructions through the surface data logger computer keyboard are required to access the

data from any one instrument or to access the data of an entire underground data logger.

There are no planned infrequent operations for the geomechanical monitoring system. The system is designed such that in the event of a loss of the surface data logger or data link cable, each individual underground data logger can be interrogated from a laptop or equivalent computer transported to the local termination cabinet. Following a complete system disruption, each individual sensor can be monitored with a vendor supplied portable readout box. Each type of sensor and test box is unique owing to its design principle (i.e., sonic, vibration, resistive, etc.).

There is no system shutdown mode. Each unit (computer, printer, LTC, etc.) may be shutdown by the operation of its own power switch or by removing power from a local power distribution panel.

The sensors and readout equipment employed in the geomechanical monitoring system are precision instruments and should be treated as such. Some instruments are permanently installed and cannot be repaired.

3.7 AU08 - Underground and Surface Surveying

Operations within the surveying subsystem consist of the use of standard surveying instruments both on the surface and underground. Trained surveyors perform this work in compliance with accepted surveying standards. Surveying is accomplished on an as-needed basis.

Operational conditions that can affect surface surveying results and personnel include weather conditions and wildlife. Precautions are taken as required to avoid or mitigate extremes of outdoor temperatures and/or wind conditions. Personal vigilance is necessary to avoid range stock, snakes, etc.

Underground surveying operations can be affected by mining traffic and the mine ventilation system. Methods of avoidance by scheduling means and changing ventilation modes can be sued to control these conditions.

Appendix A - Maintenance Requirements

AU00 Underground Facilities and Equipment System

The maintenance program shall ensure that the property is maintained in a manner that promotes operational safety, work health, environmental protection, property preservation and cost effectiveness while meeting the programmatic mission. The program will also be consistent with all DOE orders and federal and state mining regulations. No system process control instrumentation is present in the AU00 system that would require maintenance.

In carrying out this program, a graded approach shall be taken by line management in the development and implementation of the maintenance program. In-service inspections are used heavily within the AU00 system. No formal surveillance program is applicable to the AU00 system.

AU01 Underground Experimental Facilities
AU02 Underground Disposal Facilities
AU03 Underground Shaft Pillar Facilities

The AU01, AU02, and AU03 systems preventive maintenance is performed by the underground operations group and is supported with procurements and guidance from the AU06 (Ground Control) and AU07 (Geomechanical Monitoring) systems. Typical maintenance is determined by periodic in-service inspections in accordance with the federal (MSHA) and state mine maintenance regulations. Preventative mine maintenance activities include:

- Mechanical scaling of ribs and roofs.
- Milling floors as required.
- Installing or replacing rock bolts and other supporting features when and where required.

Due to the ground movement characteristics of bedded salt, corrective maintenance is occasionally required as determined by the functions and practices of the AU06 and AU07 systems. Corrective maintenance as related to the underground openings (systems AU01, AU02, and AU03) is defined as the removal of large areas of deteriorated ground by re-mining of the affected areas.

Documentation of required inspections and maintenance will be kept in daily underground operations log books or in accordance with underground operating or work control procedures.

Appendix A - Maintenance Requirements

AU04 Underground Mobile Equipment

Standard maintenance practices and equipment shall be used to meet or exceed manufacturers; recommendations. Documentation of inspections and maintenance will be kept on checklists and/or maintenance procedures.

Continuous in-service inspection of the underground mobile equipment is to be made to ensure safe operation at all times. This includes braking systems, signaling devices and light on personnel carriers and transporters. Electric powered equipment safety checks are necessary to ensure all safety requirements are met including proper grounding, insulation adequacy, etc.

Corrective maintenance is performed on an as-needed basis. Periodic preventative maintenance is to be performed in accordance with WP 10-2, Maintenance Operations Instruction Manual.

AU05 Underground Diesel Fuel

Standard maintenance practices and equipment ;shall be used to meet or exceed manufacturers' recommendations. Documentation of inspections and maintenance will be kept on checklists and/or maintenance procedures.

AU06 Underground Ground Control

The AU06 system, by definition and function, is a system that provides maintenance to other systems AU01, AU02, and AU03. As such, there are no direct maintenance requirements for this system.

AU07 Geomechanical Monitoring

There are no specific recommendations or requirements for performing corrective maintenance on the geomechanical monitoring equipment. Most sensors are permanently installed (buried in concrete or salt rock) and cannot be repaired. Corrective maintenance on the computer, peripheries, and other commercial equipment should follow the manufacturer's recommendations.

There need be no routine scheduled preventive maintenance on the data logger equipment (computer, monitor, printer, modem); underground terminal boxes or termination boxes; or geomechanical sensors. Some commercial supplied portable readout devices used for periodic interrogations of installed geomechanical sensors contain batteries. Vendor recommendations on battery care, recharging, and replacing should be followed.

All operating geomechanical sensors are periodically monitored in-service either remotely by the data logger equipment or manually with portable readout devices. Under the WIPP Geomechanical Monitoring Program, this data is

verified, recorded, and analyzed by geotechnical engineers. Maintenance is initiated on anomalous data points. This continuous operational monitoring program suffices as an in-service inspection program.

AU08 Underground and Surface Surveying

Survey equipment processes use sound surveying/scientific principles and appropriate standards. In-service tests are to be performed on all equipment when in use to ensure proper operation and calibration.

Surveying equipment is to be controlled and calibrated in accordance with the WIPP Metrology Program. Results of calibrations, maintenance, and repair will be documented. Calibration records are to identify the reference standard and the relationship to national and international standards or nationally accepted measurement systems. Calibration reports and operability tests are to be maintained by the WIPP Metrology Lab.

The WIPP Metrology Program requires, at a minimum of every two years or in accordance with manufacturers' recommendations, all equipment be given complete maintenance and calibration checks by approved vendor(s) or a qualified laboratory to ensure the equipment is properly calibrated and/or in proper working condition. For subsidence measurement equipment, maintenance and calibration are performed by approved vendors in accordance with national standards. Equipment is to be maintained and calibrated by vendors on the WIPP QA approved Qualified Supplier's List. The WIPP QA will process and ensure the adequacy of routing maintenance performed by the vendor.

Appendix B - Interfacing Systems

PRIMARY INTERFACING SYSTEMS	
System Providing Service	Service to be Provided
System FP00	Provide fire protection for the underground facilities of systems AU01, AU02, AU03, and AU05 in accordance with the requirements in SDD FP00. Provide for and ensure that underground diesel powered vehicles of system AU04 shall have their own fire suppression systems, as required by the codes and regulations.
System VU00	Provide as required, ventilation for the underground facilities of systems AU01, AU02, AU03, and AU05. Provide the physical components for control and maintenance of a negative static pressure differential between the ventilated chambers of the underground facilities of systems AU01, AU02, and AU03 and the above ground environment such that all air flow is from the above ground environment.
System ED00	Provide as-required, electrical power to supply underground utilization equipment, instrumentation receptacles, and lighting a the mining, experimental, and disposal areas including facilities of systems AU01, AU02, AU03, AU04, AU05, and AU07. Provide the electrical power for control and maintenance of a negative static pressure differential between the ventilated chambers of the underground facilities of systems AU01, AU02, and AU03 and the above ground environment such that all air flow is from the above ground environment.
System WD00	Provide water supply for construction and normal plant uses for the Underground Facilities and Equipment of system AU00.
System CA00	Provide plant air for normal plant uses for all the Underground Facilities and Equipment of system AU00.
System CF00	Provide space for the geomechanical monitoring data logger equipment in a centralized room in the WIPP surface plant.
System CM00	Provide telephone service, the PA intercom systems, as required in the underground facilities (AU00).
System UH00	Provide pathways from the surface for all services, utilities, and ventilation to the underground facility and provide the mechanical movement for all personnel and materials.
System CA00	Provide space, supports, and embedments for equipment and piping as required.

Appendix B - Interfacing Systems

PRIMARY INTERFACING SYSTEMS	
System Providing Service	Service to be Provided
System CM00	Provide space, and mounting for mine pager phones, dial phones, public address system components, and LPUs.
System ED00	Provide space, support, and embedments for equipment as specified on site drawings, with consideration for penetrations and accessibility.
System EM00	Provide equipment space and facility housing at underground locations for VOC monitoring, and seismic detecting.
System FP00	Provide structural support for the installation of the fire protection system equipment and suitable environmental conditions for the equipment.
System RM00	Provide sheltered space and mounting surfaces for each RM00 installation.
System UH00	Provide excavations, appurtenances, and mounting facilities for support of the functions and equipment of the UH00 system.
System VU00	Provide the supports and embedments for air ducts and underground bulkheads.
System WD00	Provide support and embedment for the water system components with consideration given for accessibility and support anchors required for maintenance.
System WH00	Provide space and rooms underground for handling, emplacement, and disposal of TRU waste containers/canisters and TRU waste handling equipment.

Appendix C - References

1.	SAND 87-2382	"In situ Testing at the Waste Isolation Pilot Plant."
2.	30 CFR 57	Federal Metal and Nonmetallic Mine Safety and health Regulations (MSHA)
3.	29 CFR 1910	Occupational Safety and Health Standards for General Industry
4.	29 CFR 1926	Safety and Health Regulations for Construction (OSHA)
5.	FGCS Standards	Classification, Standards of Accuracy, and General Specifications of Geodetic Control Surveys, Federal Geodetic Control Committee, 1975 (1980 Edition)

Appendix D - Definitions

Underground (Mining) Terms

Back	Alternative term for the roof of the mine.
Bardown	Scaling the walls or ribs using a long steel bar to pry off loose materials.
Bells	Signals for lowering and hoisting the skip, bucket or cage in a shaft usually are given by the bells.
Borehole	A hole in rock produced by the boring process using drills or augers with ground penetrating capabilities.
Cage	Mining term for elevator. The structure used in a mine shaft for the conveyance of men and materials.
Cap Lamp	The lamp which a miner wears on his safety cap or hard hat.
Collar	The surface opening at the top of the shaft.
Drift	See Entry.
Entry	An underground passage used for haulage, ventilation or as a man-way. Also called "Drift" in hard rock mine.
Headframe	The steel frame at the top of a shaft, which carries the sheave or pulley for the hoisting rope.
Hoistman	In mining, the one who operates hoisting machinery used to raise or lower cages and skips in a mine shaft.
Panel	A series of rooms located between entries.
Rib	The walls of a mine entry.
Room	An excavated area in a mine connected to an entry with width dimensions greater than the entry. Generally excavated for a special purpose to provide space for disposal or operational uses.
Roof Bolt	(Also Rock Bolt) A bar, usually of steel, inserted into drilled holes in the roof (or back) or rib to provide additional support for these surfaces.

Working Copy

Appendix E - Equipment List, Drawing List, Specification List, Instrumentation Requirements, Operations Procedures List, O&M Manuals

Equipment List

For the latest list of equipment for this system, see the Equipment Register which is a controlled document, routinely updated. The equipment in this system may be listed under any of the following systems or subsystems: AU00, AU01, AU02, AU03, AU04, AU05, AU06, AU07, AU08.

Drawing List

For the latest list of drawings for this system, see the WIPP Drawing Register which is a controlled document, routinely updated. The AU00 system and all subsidiary subsystems are listed as follows: AU00, AU01, AU02, AU03, AU04, AU05, AU06, AU07, AU08.

Specification List

For the latest list of specifications for this system, see the WIPP Specification Register which is a controlled document, routinely updated. The AU00 system and all subsidiary subsystems are listed as follows: AU00, AU01, AU02, AU03, AU04, AU05, AU06, AU07, AU08.

Instrumentation Requirements

Component instruments supplied with underground mining machinery require no calibration. Other instrumentation used in this system are in AU07 - Geomechanical Monitoring. Instrument calibration, if required, is accomplished by the user in accordance with O&M Manual instructions.

Operations Procedures List

All procedures for operation and maintenance of WIPP underground equipment and machinery are listed in the Index for Controlled Documents.

O&M Manuals

O&M Manuals for equipment within the AU00 system are located in the Engineering File Room (EFR). Equipment files by equipment number are grouped under the subject subsystem designation.