Controlled
Copy

CCP-TP-179

Revision 0

CCP Gas Transfer Manifold Systems and Sample Compositing

EFFECTIVE DATE: 05/02/2007

Mark Pearcy

PRINTED NAME

APPROVED FOR USE

RECORD OF REVISION

Revision Number	Date Approved	Description of Revision
0	05/02/2007	Initial Issue.

Controlled
Copy

1. PURPOSE

This Central Characterization Project (CCP) procedure provides instruction for using the gas transfer manifold systems to prepare gas standards, perform gas sample dilutions in SUMMA® canisters, and to composite field samples.

Personnel performing this procedure will be trained and qualified in accordance with CCP-QP-002, *CCP Training and Qualification Plan*, prior to performing this procedure.

2. SCOPE

ECL uses four gas transfer manifold systems to provide accurate measurement of gas volume transfers required for analysis of gases by CCP-TP-173, *CCP Analysis of Gas Samples for VOCs by GC/FID*, CCP-TP-174, *CCP Analysis of Gas Samples for Hydrogen and Methane by Micro GC/TCD*, and CCP-TP-175, *CCP Analysis of Gas Samples for VOCs by GC/MS*. The gas transfer manifold design is based on that described in US EPA Compendium Method TO-14. All systems have multiple ports and can be used to prepare gas samples and standards. System 2A is used primarily for the preparation of standards requiring multiple cylinders. Systems 2B, 2C, and 2D are used for the preparation of samples and for standards that can be directly transferred into a SUMMA® canister from a cylinder. After field samples are prepared on the gas transfer manifold, aliquots of up to twenty samples can be composited into one composite sample for analysis.

3. DEFINITIONS

None

4. PROCEDURES

4.1 Safety Precautions

Wear appropriate personal protective equipment (PPE) per JSA-ECL-006, "Operation of the Gas Transfer Manifold System." Handle all compressed gases per JSA-56-03-INEEL, "Compressed Gas Cylinder Handling."

4.2 Apparatus and Materials

4.2.1 Generic gas transfer manifold system schematics are presented in Exhibits 1 and 2, for Systems 2A and 2B-2D, respectively. The major system components are:

- Piping/valving panel
- Vacuum pump with oil trap, or equivalent

- Manifold pressure gauge (Pirani)
- Humidifying vessel
- Capacitance manometer

4.2.2 SUMMA® canisters, cleaned according to CCP-TP-178, *CCP SUMMA Canister Cleaning.*

4.2.3 Stainless steel passivated gas-tight syringes, equipped with side-port 22-gauge Luer- Lock needle, minimum 60 mL capacity.

4.2.4 Septa, Teflon/silicone rubber,12.5 mm o.d., Unimetrics MICROSEP® F-174 or equivalent.

4.2.5 Ultra-high purity (UHP) nitrogen cylinder and regulator.

4.2.6 Certified gas standard cylinders, with regulators.

WARNING

Standard gas mixtures may contain ppmv concentrations of volatile organic compounds (VOCs) which are classified as carcinogens, irritants, or poisons. Care must be taken to avoid inhalation. Excess standard canisters must be vented in the fume hood to minimize personnel exposure. MSDSs for these compounds are accessed through the INL network.

NOTE: *Specifications for certified gas standards are defined in the appropriate analytical methods.*

4.3 Pre-Operational System Checks

4.3.1 Check the calibration sticker on the capacitance manometer to ensure that the calibration is valid.

4.3.2 Check that the humidifier reservoir is at least ¼ full of HPLC (organic free) grade deionized water.

4.3.3 Ensure that the manifold pressure is <0.05 torr.

NOTE: *In order to keep the manifold systems clean, piping for the manifolds is maintained under constant vacuum.*

4.3.4 Perform system maintenance, as necessary, and record in the Manifold System Maintenance Logbook.

4.3.5 Before compositing samples, flush the syringe five times with UHP nitrogen.

Controlled
Copy

4.4 Laboratory Blank Preparation

4.4.1 Collect a laboratory blank using the manifold at least once per analytical batch, before starting sample analysis.

NOTE: *Laboratory blanks are analyzed with samples according to the requirements and acceptance criteria defined in the appropriate analytical methods. The laboratory blanks verify the cleanliness of the entire analytical system, including the gas transfer manifolds.*

4.4.2 Open the supply valve on the UHP nitrogen cylinder. Set the regulator pressure to deliver <60 psi.

4.4.3 Attach a clean, appropriately sized SUMMA® canister to the manifold port.

4.4.4 Evacuate the manifold up to the valve on the SUMMA® canister. Verify a vacuum <0.05 torr as read on the manifold vacuum Pirani gage. Open the SUMMA® canister and evacuate to <0.05 torr as read on the Pirani gauge.

4.4.5 Isolate the vacuum pump and verify that pressure on Pirani gauge is less than 0.05 torr. If the pressure exceeds 0.05 torr, discontinue activity on the manifold until the source of the problem can be corrected.

4.4.6 Fill the SUMMA® canister to approximately 20-25 psi with humidified UHP nitrogen.

4.4.7 Close the SUMMA® canister valve and isolate the UHP nitrogen supply.

4.4.8 Remove the laboratory blank SUMMA® canister from the manifold port.

4.4.9 Record all pertinent measurements relating to the blank preparation in the Gas Sample Preparation Logbook and tag the laboratory blank SUMMA® canister with the appropriate sample information.

4.5 Sample Dilution in Original Canister (<4X Dilution)

NOTE: *CCP-TP-175 provides guidance on determining appropriate dilution factors.*

4.5.1 Open the supply valve on the UHP nitrogen cylinder. Set the regulator pressure to deliver <60 psi.

4.5.2 Attach the field sample SUMMA® canister to the manifold header.

WARNING

Field gas samples may contain volatile organic compounds (VOCs) that are classified as carcinogens, irritants or poisons. Care must be taken to avoid inhalation. Excess samples canisters must be vented in the fume hoods to minimize personnel exposure.

4.5.3 Leave the canister valve closed and evacuate the manifold piping. Verify that the system pressure as indicated on the Pirani gauge is <0.05 torr.

4.5.4 Isolate the vacuum pump and observe the leak rate for the manifold and attached SUMMA® canister via the Pirani gauge. If no leaks are evident, and the capacitance manometer reads 0000, open the SUMMA® canister valve and allow the sample to expand into the system dead volume. If the SUMMA®canister leaks, send to Canister Cleaning for repair and reprocessing.

CAUTION

If the vacuum pump is not isolated, the sample will be lost.

4.5.5 The pressure value indicated on the capacitance manometer after expanding the sample into the manifold becomes the initial pressure for the dilution calculation (see step 4.5.9).

4.5.6 Allow the dilution gas (humidified UHP nitrogen) to pressurize the SUMMA® canister to achieve the desired dilution ratio. Introduce the dilution gas slowly to avoid overshooting the desired dilution.

4.5.7 When the desired pressure is attained on the manometer, isolate the dilution gas supply and close the canister valve. This capacitance manometer reading is the final measurement for the dilution ratio calculation (see step 4.5.9).

4.5.8 Fill out the required information in the Gas Sample Preparation Logbook.

NOTE: *The capacitance manometer reads in units of 2 torr. The value must be divided by 2 to obtain a value in torr to enter into the logbook.*

4.5.9 Calculate the dilution ratio using the following equation:

$$Dilution\ Factor\ (DF) = \frac{P_f}{P_i}$$

where P_f is the capacitance manometer reading from step 4.5.7 and P_i is the capacitance manometer reading from step 4.5.5.

4.5.10 Evacuate the gas transfer manifold between samples to preclude cross contamination.

4.6 Sample Dilution into Another SUMMA® Canister (> 4X Dilution)

NOTE: *CCP-TP-175 provides guidelines on determining appropriate dilution factors.*

4.6.1 Open the supply valve on the UHP nitrogen cylinder. Set the regulator pressure to deliver <60 psi.

4.6.2 Attach the field sample SUMMA® canister to the port closest to the nitrogen inlet and another clean SUMMA® canister (250-mL or 500-mL) to any other port.

4.6.3 Leave the canister valves closed and evacuate the manifold piping. Verify that the system pressure as indicated on the Pirani gauge is <0.05 torr.

4.6.4 Open the canister valve on the empty clean canister and evacuate. Verify that the system pressure as indicated on the Pirani gauge is <0.05 torr.

4.6.5 Isolate the vacuum pump and observe the leak rate for the manifold with the open attached clean SUMMA® canister via the Pirani gauge. If no leaks are evident, and the capacitance manometer reads 0000, open the valve on the canister containing the field sample and transfer the appropriate amount into the clean SUMMA® canister. If the SUMMA® canister leaks, send to Canister Cleaning for repair and reprocessing.

NOTE: *The sample amount transferred must be greater than 200 torr. If not, humidified UHP nitrogen must be added first so that the total of nitrogen plus sample is greater than 200 torr.*

4.6.6 Use the pressure value indicated on the capacitance manometer after expanding the sample into the clean canister and subtracting any added nitrogen as the initial pressure for the dilution calculation.

4.6.7 Introduce humidified UHP nitrogen into the SUMMA® containing the sample aliquot until the desired total pressure is attained on the capacitance manometer. This reading is the final measurement for the dilution ratio calculation (see step 4.5.9 for equation).

4.6.8 Fill out the required information in the Gas Sample Preparation Logbook.

4.7 Standard Preparation

4.7.1 Standards for CCP-TP-173, CCP-TP-174, and CCP-TP-175

4.7.1.1 Prepare standards at concentrations specified in the analytical methods.

4.7.1.2 Prepare dilutions of the gas standard using the procedures defined in step 4.6. Attach the certified gas standard cylinder to the manifold header instead of a field sample SUMMA® canister (step 4.6.2).

4.7.1.3 Record the preparation of the standard in the GC/MS Standard Preparation Logbook.

4.7.2 Calibration Standards for CCP-TP-175, *CCP Analysis of Gas Samples for VOCs by GC/MS*

4.7.2.1 Prepare standards at concentrations specified in the analytical method.

4.7.2.2 Attach appropriate certified gas standard cylinders to the system 2A manifold.

4.7.2.3 Follow preparation instructions in the analytical method.

4.7.2.4 Record the preparation of the standard in the GC/MS Standard Preparation Logbook.

4.8 Composite Sample Preparation

NOTE: *Only container samples from the same waste stream profile can be composited.*

4.8.1 Pressurize the original field sample according to Section 4.4.

4.8.2 Using a stainless steel passivated gas-tight syringe, transfer aliquots of the samples to be composited into a clean evacuated 250-mL SUMMA canister, according to guidance in the following table. See Exhibit 3, Compositing Components.

Number of Samples in Composite	Aliquot Size (mL)
4	50
5	50
6	40
7	30
8	30
9	26
10	24
11	22
12	20
13	18
14	16
15	16
16	14
17	14
18	12
19	12
20	12

4.8.3 Label the composite sample using the 8-character base of the laboratory sample ID from the designated samples plus a “C” suffix to indicate a composite sample.

4.8.4 Pressurize the composite sample according to section 4.4.

4.8.5 Fill out the required information in the Composite Sample Preparation Logbook.

4.8.6 Flush the syringe with UHP nitrogen.

Controlled
Copy

5. RECORDS

Records generated during the performance of this procedure are maintained as QA records in accordance with CCP-QP-008, *CCP Records Management*. The records are the following:

The following records generated during the performance of this procedure will be compiled into the Data Report in accordance with CCP-TP-188, *CCP Data Recording, Review and Reporting.*

QA/Nonpermanent

- Copy of applicable pages of Gas Sample Preparation Logbook
- Copy of applicable pages of Manifold System Maintenance Logbook
- Copy of applicable pages of Composite Sample Preparation Logbook

6. REFERENCES

6.1 U.S. Environmental Protection Agency (U.S. EPA), 1988a, Compendium Method TO-14, The Determination of Volatile Organic Compounds (VOC) in Ambient Air Using SUMMA Passivated Canister Sampling and Gas Chromatographic Analyses, May 1988, Quality Assurance Division, Environmental Monitoring Systems Laboratory, Research Triangle Park, North Carolina.

6.2 CCP-PO-001, *CCP Transuranic Waste Characterization Quality Assurance Project Plan*

6.3 CCP-QP-002, *CCP Training and Quaification Plan*

6.4 CCP-QP-008, *CCP Records Management*

6.5 CCP-TP-173, *CCP Analysis of Gas Samples for VOCs by GC/FID*

6.6 CCP-TP-174, *CCP Analysis of Gas Samples for Hydrogen and Methane by Micro GC/TCD*

6.7 CCP-TP-175, *CCP Analysis of Gas Samples for VOCs by GC/MS*

6.8 CCP-TP-178, *CCP SUMMA Canister Cleaning*

6.9 JSA-ECL-006, “Operation of the Gas Transfer Manifold System”

6.10 JSA-56-03-INEEL, “Compressed Gas Cylinder Handling”

Controlled
Copy

Exhibit 1. System 2A Gas Transfer Manifold (Example)

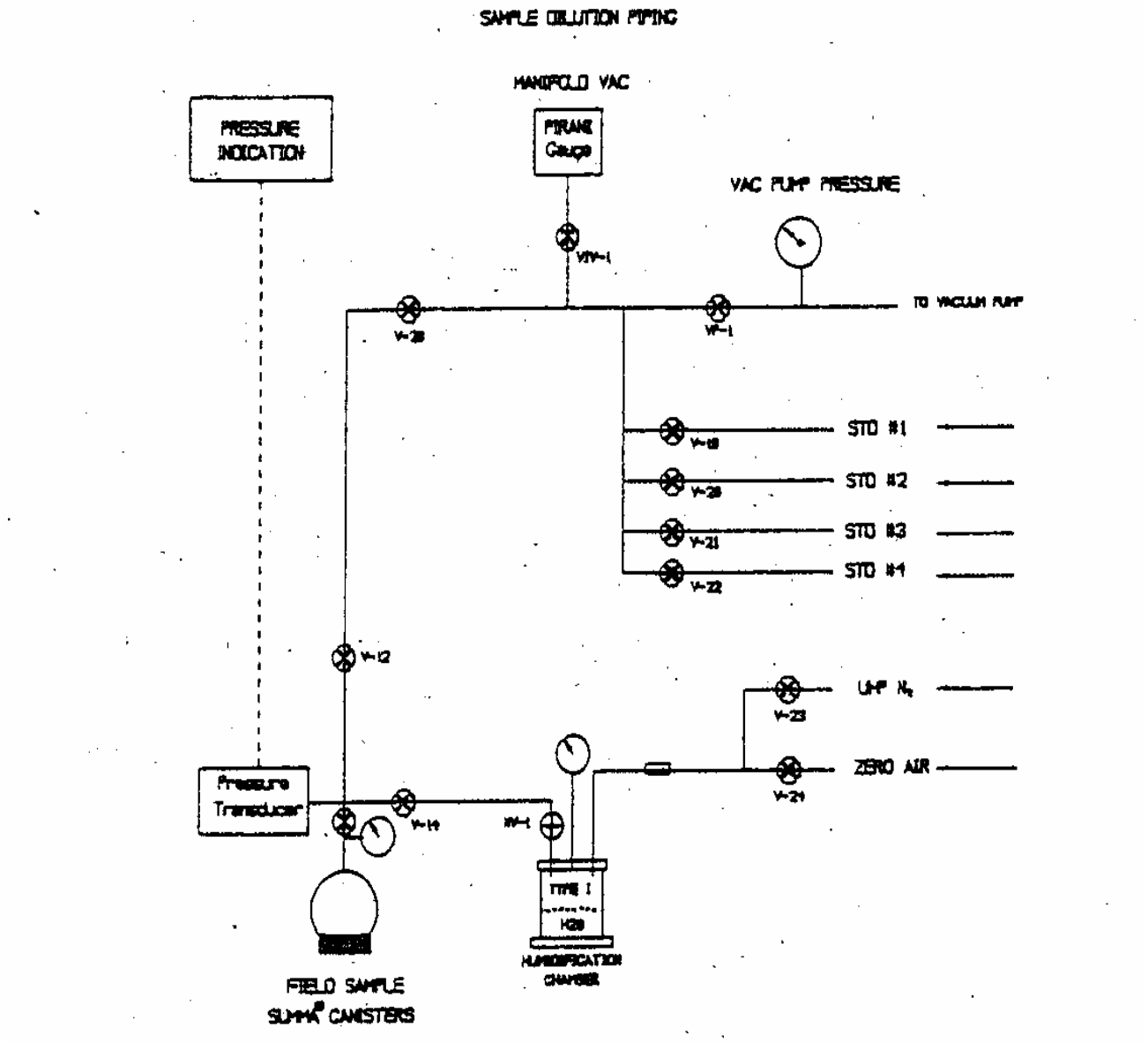

Controlled
Copy

Exhibit 2. System 2B Gas Transfer Manifold (Example)

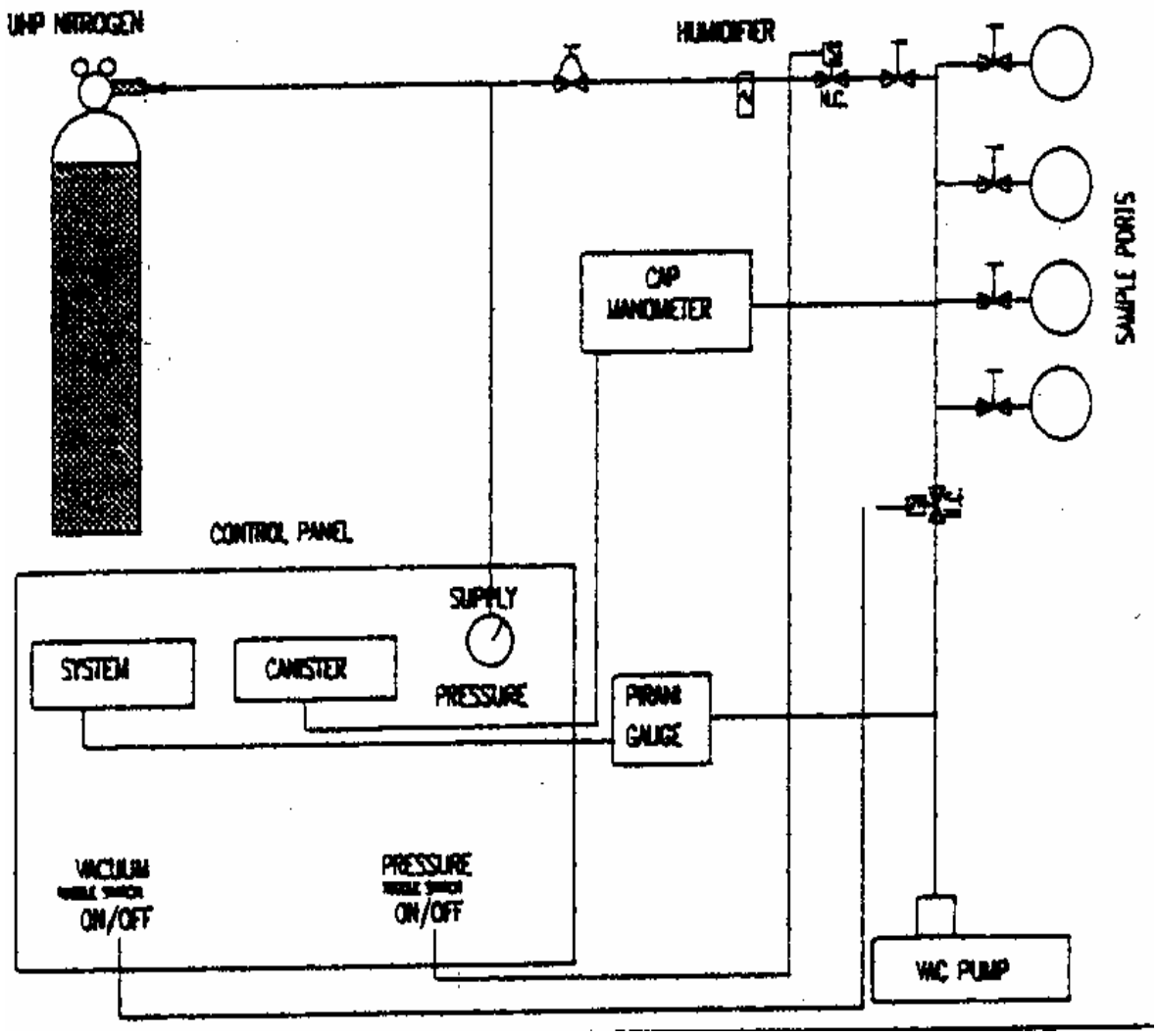

Controlled
Copy
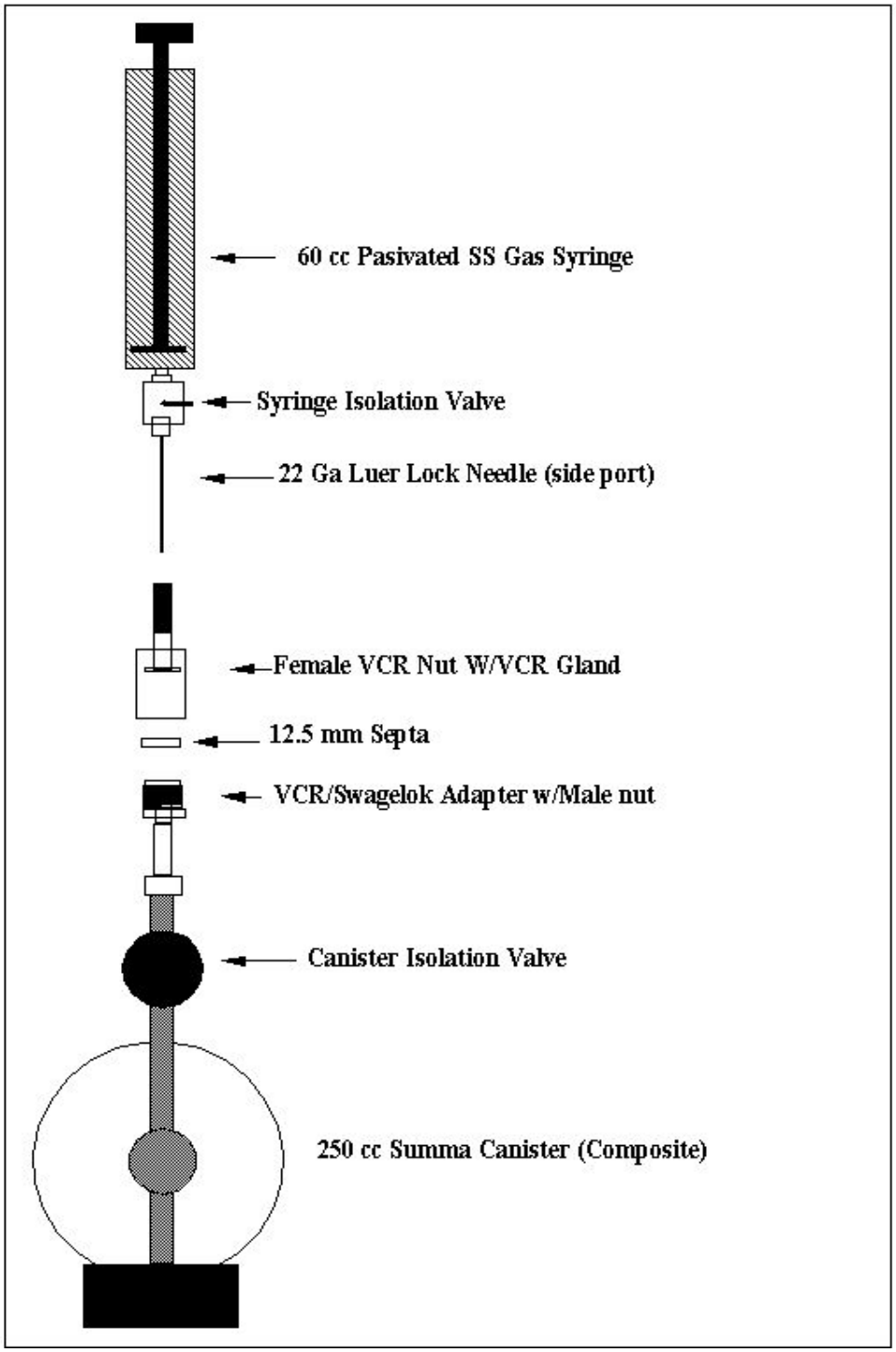
Exhibit 3. Compositing Components (Example)