Controlled
Copy

CCP-CM-029

Revision 0

CCP
High Energy
Real-Time Radiography
System HE-RTR-01

EFFECTIVE DATE: 10/18/2010

Larry Porter

PRINTED NAME

APPROVED FOR USE

RECORD OF REVISION

Revision Number	Date Approved	Description of Revision
0	10/18/2010	Initial issue.

TABLE OF CONTENTS

1.0 SYSTEM DESCRIPTION 7
1.1 Facility, Major Components, and Subsystems 7
1.1.1 Facility 7
1.1.2 Major Components 7
1.1.2.1 LINATRON X-Ray Source 8
1.1.2.2 X-Ray Detector 15
1.1.2.3 Cart and Rail System 16
1.1.2.4 Control Room Trailer 17
1.1.2.5 X-Ray Vault 18
1.1.3 Subsystems 18
1.1.3.1 Vertical Manipulators 19
1.1.3.2 Software 19
1.1.3.3 Safety Interlocks 19
1.1.3.4 Electrical Power 21
2.0 DESIGN REQUIREMENTS 22
2.1 Specific Requirements 22
2.2 Codes and Standards 22
2.3 Change Control 22
3.0 OPERATIONAL INFORMATION 23
3.1 Warnings and Alarms 23
3.1.1 Emergency Stops 23
3.1.2 Warning Signals – X-Ray Production 23
3.1.3 Warning Lights 24
3.1.4 Fire Protection 24
3.1.5 Industrial Hazards 25
3.1.6 Operating Environment and Natural Phenomena 28
3.1.7 Security/Television Monitoring Systems 28
4.0 REFERENCES 29

LIST OF ATTACHMENTS

Attachment 1 – Equipment Setup Requirements 30
Attachment 2 – Shield Calculations 32
Attachment 3- HE-RTR Hazards and Controls 35

LIST OF ACRONYMS AND ABBREVIATIONS

AC	Alternating Current
AFC	Automatic Frequency Control
amp	ampere
BCL	Beam Center Line
C	Celsius
CCP	Central Characterization Project
CCTV	Closed Circuit Television
CFR	Code of Federal Regulations
CH	Contact-Handled
cm	centimeter
CM	Configuration Management
Coax	Coaxial
DOE	U.S. Department of Energy
ED	Equipment Description
EMAG	Electromagnet
EMI	Electro Magnetic Interference
ES	Emergency Stop
F	Fahrenheit
fps	frames per second
FWD	Forward Power
Gy	Gray
HE-RTR	High Energy Real-Time Radiography
HF	Hydrofluoric
HV	High Voltage
HVAC	Heating, Ventilation, and Air Conditioning
HVPS	High Voltage Power Supply
IBC	International Building Code
IEEE	Institute of Electrical and Electronics Engineers
in	inches
KeV	Kilo electron volts
kV	kilovolts
LANL	Los Alamos National Laboratory
MAG	Magnetron Current
MeV	Mega (million) electron volts
MHz	megahertz
Min	minute
mm	millimeter
mR/Hr	millirem per hour
mW	milliwatt
NCRP	National Council on Radiation Protection
NDE	Nondestructive Examination
NFPA	National Fire Protection Association

LIST OF ACRONYMS AND ABBREVIATIONS (CONTINUED)

OSHA	Occupational Safety and Health Administration
PFN	Pulse Forming Network
PLC	Programmable Logic Controller
psi	pounds per square inch
RF	Radio Frequency
RFL	Reflected
RTR	Real-Time Radiography
SF6	Sulphur Hexaflouride
Sv	Sievert
SWB	Standard Waste Box
TCU	Temperature Control Unit
TFT	Thin Film Transistor
Triax	Triaxial
TRU	Transuranic
TVL	Tenth Value Layers
µm	micrometers
VAC	Volts Alternating Current
WIPP	Waste Isolation Pilot Plant
XGD	X-Ray Generating Device

SUMMARY

The high energy real-time radiography system (HE-RTR) is a custom built system for carrying out non-destructive characterization of radioactive nuclear waste. The system uses a LINATRON x-ray source which generates an energetic photon wave in the x-ray frequency range that passes through the material to be characterized. A portion of the wave is absorbed and the remainder is transmitted through the material. The amount of radiation absorbed depends on the thickness and the density of the material. The x-ray photons that are transmitted through the material are absorbed by the detector and translated to determine the characteristic of the material x-rayed.

The HE-RTR system provides a Nondestructive Examination (NDE) functionality that is designed to meet the requirements of CCP-PO-001, *CCP Transuranic Waste Characterization Quality Assurance Project Plan* (Reference 4), CCP-PO-002, *CCP Transuranic Waste Certification Plan* (Reference 5), and CCP-PO-003, *CCP Transuranic Authorized Methods for Payload Control (CCP CH-TRAMPAC)* (Reference 6).

This Equipment Description (ED) is not an authorization basis document. It is a piece of Central Characterization Project's (CCP) Configuration Management (CM) program and is intended to be used as technical information for the Host site's use when incorporating CCP's equipment into their safety basis. This ED is a central coordinating link among the engineering design documents, the facility authorization basis, and implementing procedures. This ED does not originate requirements or basis information, but rather collects that information into a convenient usable form. The ED consolidates information about the HE-RTR system into one document.

1.0 SYSTEM DESCRIPTION

The HE-RTR unit characterizes waste containers including drums and standard waste boxes containing low density and high density transuranic (TRU) waste, in support of the Contact-Handled (CH)-TRU waste characterization program for shipment of TRU waste to the Waste Isolation Pilot Plant (WIPP).

The WIPP is designed to permanently dispose of TRU radioactive waste left from the research and production of nuclear weapons. Using the HE-RTR, a trained operator will be able to identify prohibited items in waste containers per DOE/WIPP-02-3122, *Transuranic Waste Acceptance Criteria for the Waste Isolation Pilot Plant* (Reference 3).

1.1 Facility, Major Components, and Subsystems

1.1.1 Facility

The HE-RTR equipment is located outdoors and protected from weather. The HE-RTR includes a stand- alone control room trailer, concrete x-ray vault covered by a steel shelter, and ancillary equipment in weather-rated enclosures located outside the vault. An outdoor area for loading/unloading waste containers into the vault may be provided with weather protection in accordance with host site requirements.

All electrical installations are in accordance with National Fire Protection Association (NFPA) 70, *National Electric Code* (Reference 2). The unit includes provisions for a U.S. Department of Energy (DOE) Host site to supply fire extinguishers and tie the unit into an onsite fire alarm system. The shielding of the facility is in accordance with ANSI/HPS N43.3-2008, *Installations Using Non-Medical X-Ray and Sealed Gamma-Ray Sources, Energies up to 10 MeV* (Reference 1).

1.1.2 Major Components

The HE-RTR is composed of the following major system components:

- LINATRON X-Ray Source
- X-ray detector
- Cart and rail system
- Control room
- X-ray vault

1.1.2.1 LINATRON X-Ray Source

A LINATRON linear accelerator system is typically used in industry for non-destructive testing of metals and materials, and cargo inspection applications. It generates x-rays by accelerating electrons to extremely high energies and aiming them as a beam at a tungsten metal target. The energy of the absorbed electrons is re-emitted from the target as x-ray photons of an equivalent energy, where energy is expressed in units of mega electron volts (MeV). The dose rate output is adjustable from the user interface (control console). The LINATRON system consists of the following components:

- Control Console
- Modulator Cabinet
- Radio Frequency (RF) Unit
- X-ray head
- Temperature control unit (TCU)

Figure 1, LINATRON-M High Level Diagram, illustrates the components and connections of the LINATRON. These components are connected by alternating current (AC) power, signal cables, and coolant hoses.

Figure 1. LINATRON-M High-Level Diagram

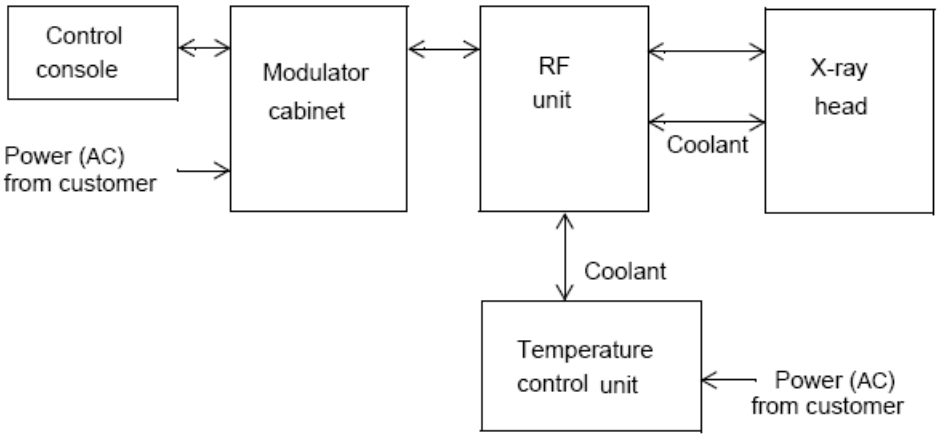

Controlled
Copy

1.1.2.1.1 Control Console

The control console in the control room is used to turn the beam off and on, and communicate with the other subsystems. Figure 2, Control Console with Touch Screen, shows the front of the control console. The control console contains the following components and features:

- 3-way keyswitch
- BEAM ON push button (amber, lighted while x-rays are being produced)
- BEAM OFF push button (white)
- EMERGENCY OFF push button (red)
- CAUTION label
- Touch screen interface

Figure 2. Control Console with Touch Screen

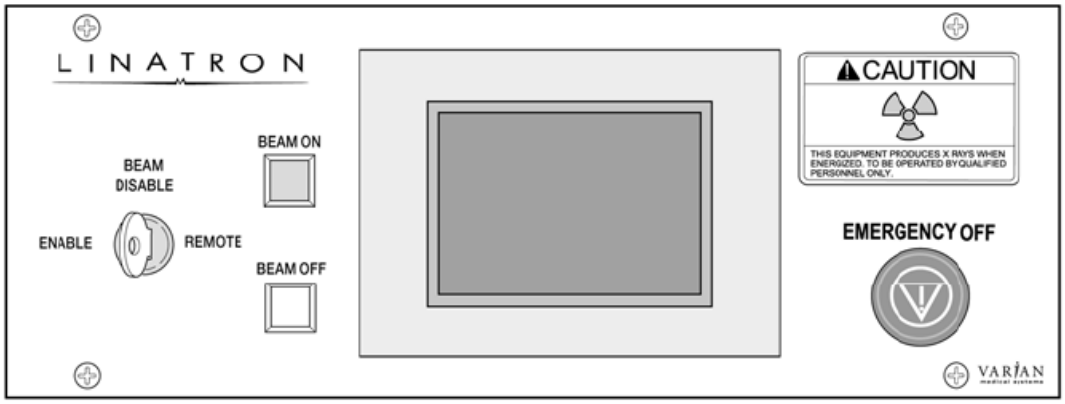

NOTE

Some control consoles are equipped with two keyswitches rather than one. On these control consoles, one keyswitch is labeled ENABLE/DISABLE and the other is labeled LOCAL/REMOTE. The functions of the 3-way keyswitch is split between the two individual keyswitches (as in the figure below). X-rays cannot be produced if the keyswitch is in the DISABLE position, regardless of the position of the other keyswitch. This key may be removed from the DISABLE position. The second keyswitch selects operation from the touch screen control console or the remote interface. This key is removable in the REMOTE position. With the first keyswitch in the ENABLE position and the second keyswitch in the REMOTE position, x-rays may be produced under the control of the external equipment.

Figure 3. Two Keyswitches

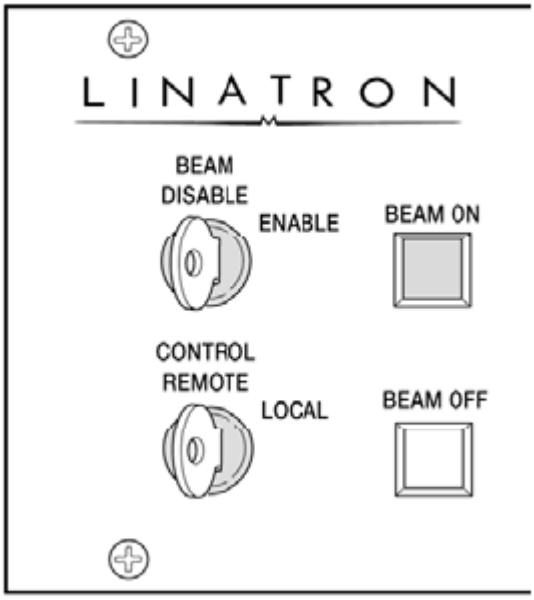

1.1.2.1.2 Modulator

The modulator supplies regulated high-voltage pulse power to the magnetron in the RF unit.

The modulator cabinet is an enclosure connected by cables to the control console, the RF unit, and the customer interface. The modulator consists of a high-voltage power supply and charge voltage regulator, a pulse forming network, and a thyratron. The modulator cabinet also contains the low-voltage power supplies, power distribution control, trigger generator, monitors, fault-protection circuits, low-voltage control signals,

Controlled
Copy

and the Programmable Logic Controller (PLC). The PLC monitors and controls operation of the accelerator.

The front panel contains the following components (see figures below):

- VACUUM CURRENT meter
- Connections for monitoring BEAM I, High Voltage Power Supply (HVPS), MAG I, FWD POWER, Pulse Forming Network (PFN) V, and Reflected (RFL) POWER
- FILAMENT TIMER and BEAM TIMER counters
- X-RAY ON light (amber)
- Audible pre-warning alarm
- EMERGENCY OFF button (red) (not shown)
- System circuit breakers
- System fuses
- Emergency off reset push button
- Service outlet

Figure 4. Modular Front Panel

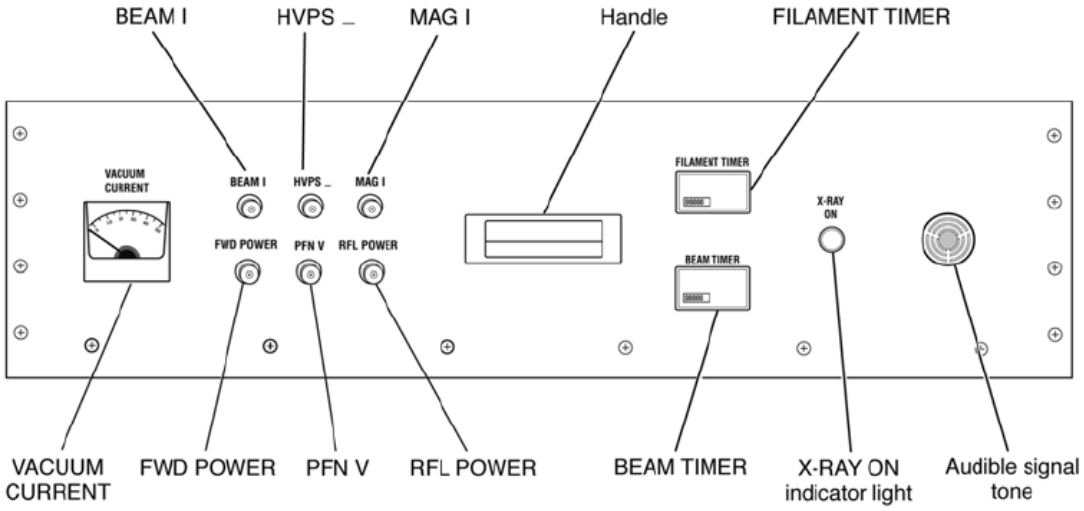

Controlled
Copy

Figure 5. Modulator Front Panel Circuit Breakers

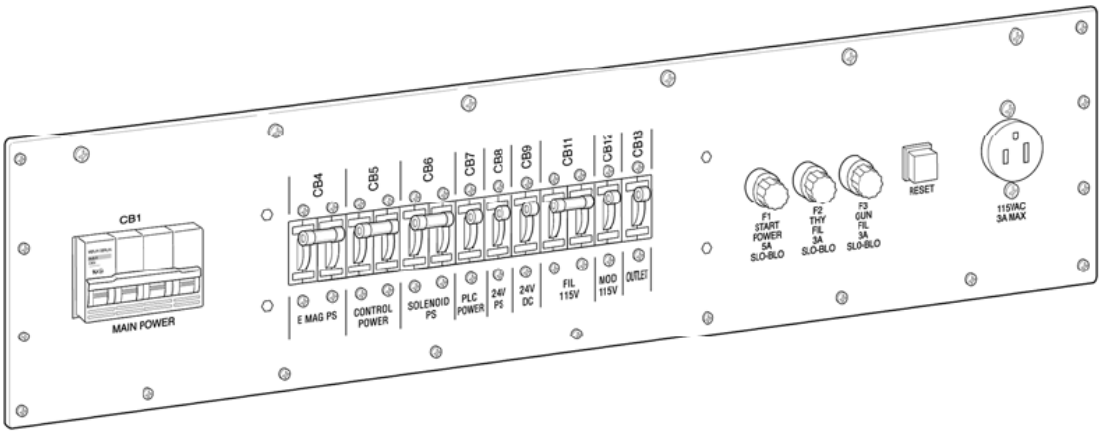

The top panel of the modulator cabinet provides connections for the following cables (see Figure 6, Modular Top Panel).

- Control console cable
- RF unit control cable
- Customer interface cable
- RF unit AC power cable
- RF unit electromagnetic (EMAG) solenoid cable
- RS422 trigger cable (DB9 connector)
- External collimator control cable (DB9 connector), Ethernet, Modbus, or blank
- External trigger
- Signal monitor cables
- High voltage (HV) pulse cables (triaxial [triax])
- Pulse current monitor cable (coaxial [coax])
- Primary power

Controlled
Copy

Figure 6. Modular Top Panel

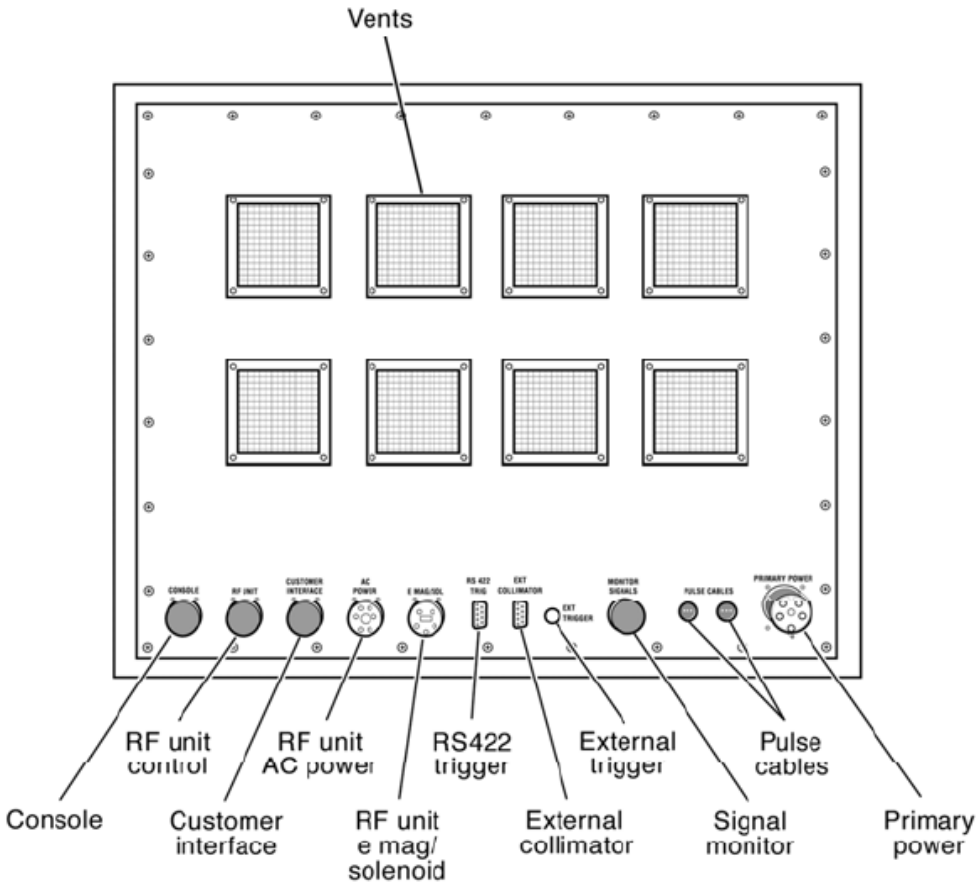

1.1.2.1.3 RF Unit

The RF unit supplies the high-power microwave pulses required to power the Beam Centerline (BCL). The main component, the magnetron, converts incoming high-voltage, high-power pulses into microwave power pulses for the BCL.

The RF unit enclosure connects to the modulator and x-ray head by cables. It connects to the TCU by coolant hoses.

Controlled
Copy

Figure 7. RF Unit Connections

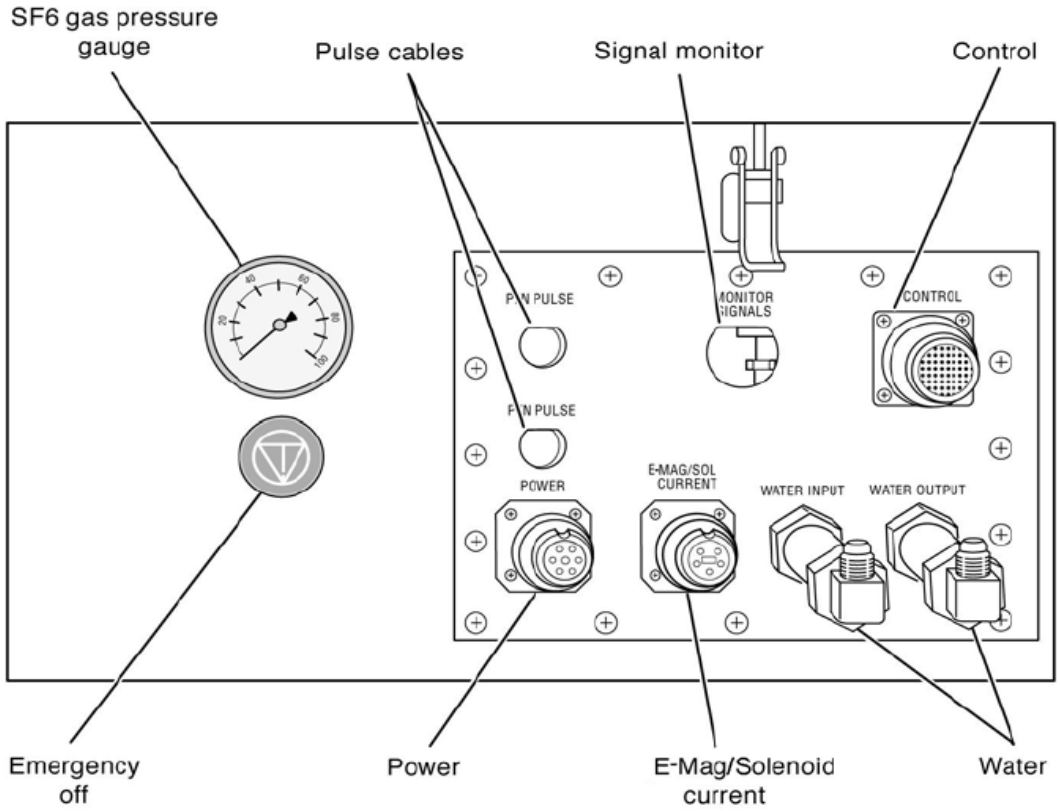

The connections from the RF unit to the modulator (see above figure) include the following cables:

- Control cable
- Pulse cables
- Power (AC)
- Monitor signals
- E-Mag/solenoid

Signal monitor cables contain the following cables bundled together:

- Forward RF power monitor cable
- Reflected RF power monitor cable
- Automatic Frequency Control (AFC) A and AFC B cables
- Beam current cable
- Magnetron current cable
- Dose cables 1 and 2

The connections from the RF unit to the x-ray head include the following components:

- BCL coolant hoses
- BCL gun filament power
- Gun pulse cable
- Ion chamber dose signal cables (2) (for monitoring)
- Beam current cable (for monitoring)
- Sulphur Hexaflouride (SF6) gas line
- Microwave transmission waveguide
- Other signal and control connections

1.1.2.1.4 X-Ray Head

The x-ray head includes the BCL with the Vaclon pump, the ion chamber, shielding, and a primary beam collimator. The BCL converts the microwave power from the RF unit magnetron and electrons from the electron gun into high-energy x-rays.

The connections to the RF unit include the following components:

- Microwave transmission waveguide
- RF unit coolant hoses (to supply coolant to the BCL)
- BCL gun filament power and injection voltage cable (HV)
- RF unit ion chamber dose signal and HV bias cable
- RF unit Vaclon cable (HV)
- SF6 line
- Beam current cable

1.1.2.1.5 Temperature Control Unit

The TCU is a self-contained temperature controller. It regulates coolant temperature of the system within ±0.5° Celsius (C) of the set point. The TCU is powered by a line source separate from the modulator. Dow-Therm SR1 is supplied with each temperature Control Unit when it is purchased through Varian. It is mixed with 50% distilled water and designed to operate at (-10° C to 40° C).

1.1.2.2 X-Ray Detector

The x-ray detector converts x-rays into electrical signals. The incident x-rays are converted by the scintillator material to visible light which generates electron hole pairs in the biased photodiode. The charge carriers stored in the capacity of the photodiode. By pulsing the gates of a thin film transistor (TFT) line the charges of all the photodiodes

are transferred in parallel to the signal outputs. All the signals are amplified in custom readout multiplexers for further processing.

The x-ray detector has three main components:

- Detector Panel
- Power Source
- Frame Grabber Board.

The detector that is used is the Digital Detector XRD1621. It has the following features:

- Large Format Real Time HE Amorphous Silicon Imaging Detector
- Panel Active Area 409.6x409.6 millimeters (mm) (16 inches [in.] by 16 in.)
- Pixel Pitch of 400 micrometers (µm)
- Up to 30 frames per second (fps)
- Pixel Array 2048 x 2048
- Selectable Gain setting
- Radiation Energy – 40 Kilo electron volts (KeV) – 15 MeV
- High Resolution 16 bit data acquisition

1.1.2.3 Cart and Rail System

The Cart and Rail system is used to move the container, to be characterized, into and out of the imaging area. A standard waste box (SWB) or drum is positioned by a forklift onto the turntable of the 2.5 ton cart and rail system. The turntable is mounted on top of the cart assembly, which is only capable of moving horizontally along the rails. The turntable is capable of continuously rotating 360 degrees in both directions. The turntable has the capability to start and stop quickly to enable detection of liquid movement within the container or subcontainers.

Figure 8. Load/Unload Position

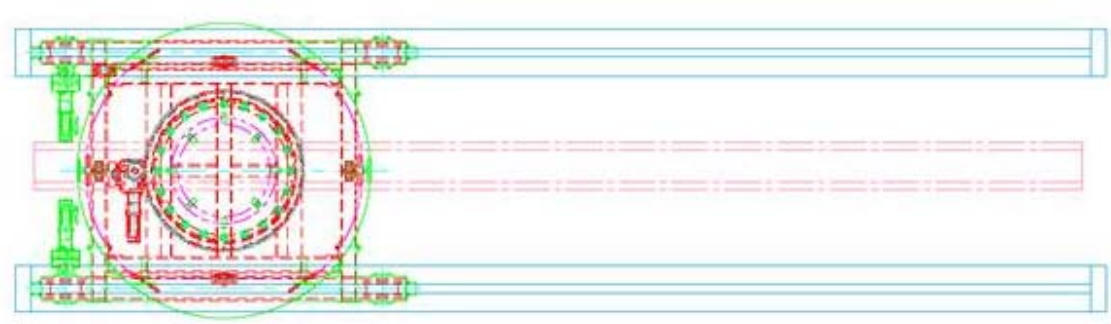

With the power to the system on, and the cart in the load/unload position, the forklift driver loads an individual container onto the cart turntable. Container guides are

provided on the turntable to center each of the different types of containers the unit can characterize. The forklift driver must be clear of the loading area and the vault before cart movement is initiated by the process operator at the control console. The cart with the container on board moves slowly along the rails toward the detection equipment. Once the cart reaches the characterization position in front of the detector, located by a limit switch, the turntable on top of the cart will rotate as programmed until the testing is complete.

Figure 9. Characterization Position

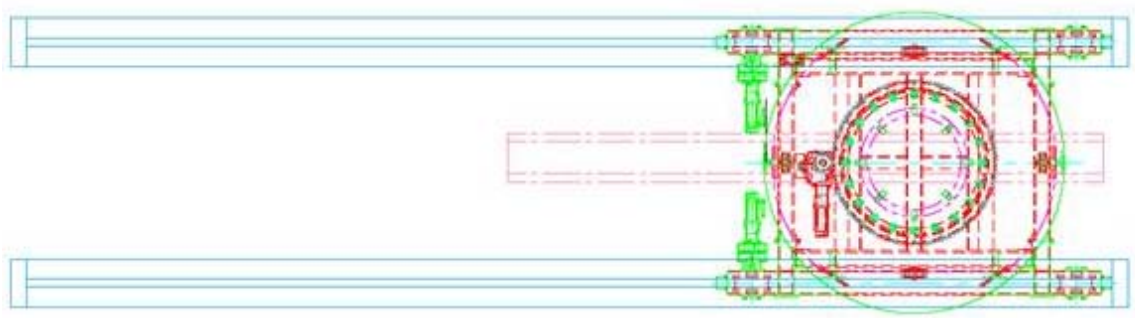

Upon characterization completion, the cart will slowly transfer back along the rails to the load/unload position for unloading by a forklift. Once the cart stops moving along the rails, the turntable on top of the cart rotates to its home position so the forklift operator can unload the container. A new container can then be loaded onto the turntable to continue the characterization process.

1.1.2.4 Control Room Trailer

A self-contained, transportable office-type trailer houses the control room and electrical room. The trailer is located in accordance with host site requirements reasonably adjacent to the vault. If ideally positioned, the trailer window faces the vault entrance so the operator can see the vault entrance from within the trailer. The control room houses the operator console, the closed circuit television (CCTV) camera monitors, and operator workstation with standard office equipment. The trailer has its own lighting including exterior “porch lights”, heating/air conditioning system, is insulated, and has provisions for complying with host site fire protection requirements. There are two exit doors with windows, one in each room. If located in flat terrain, the trailer doors are a single step up from the ground. An interior door is provided to separate the electrical room from the control room.

The Control Room Trailer consists of the following:

- Operator control room with operator console
- Electrical room with power distribution panel

- Heating, Ventilation and Air Conditioning (HVAC) system
- Fire protection system as required by the host site: hand-held fire extinguishers, smoke detectors, tie-in to site fire alarm system, sprinklers as applicable
- Emergency lighting, lit exit signs as required by the host site; office lighting

1.1.2.5 X-Ray Vault

The X-Ray Vault is a self-standing concrete assembly consisting of double concrete walls with fine aggregate in the annular space, concrete floor, concrete roof topped with fine aggregate, and a single lead-lined sliding steel door. The concrete consists of panels which can be assembled, disassembled and transported to another location as needed. The fine aggregate was chosen for its ability to be pumped/transferred into the annular space and removed by a similar process when it is necessary to relocate the vault. This design is the optimum solution to achieve exempt shielded status, which is a dose rate of 0.5 millirem(mR)/hour(Hr) at any accessible surface according to ANSI/HPS N43.2-2008 (Reference 1). Shield calculations are provided in Attachment 2, Shield Calculations.

For protection from weather and to maintain the fine aggregate placed on the concrete roof panels, the concrete vault is enclosed in a steel-roofed structure.

Please refer to the following drawings (available in CCP Records):

[A] Tilt up panels
CCP 09-173-S5
CCP 09-173-S6
CCP 09-173-S7

[B] Vault Erection
CCP 09-173-S1
CCP 09-173-S3
CCP 09-173-S4

[C] Metal Enclosure
CCP 09-173-S2

1.1.3 Subsystems

The HE-RTR incorporates the following subsystems:

- Vertical Manipulator
- Software

- Safety Interlocks
- Electrical Power

1.1.3.1 Vertical Manipulators

Two vertical lift systems are provided to raise and lower the x-ray source and detector to enable scanning the full height of a box or drum. The lift motion is stable and smooth throughout, providing a full range of motion. The x-ray source and the detector's movements can be synchronized or manually offset to provide an image at an oblique angle.

Refer to the following drawings:

Source manipulator
DE0109A03

Detector manipulator
DE0109A04

1.1.3.2 Software

Automated motion control is limited by a servo controlled system to the horizontal movement of the cart along its rails to and from the load/unload location and the imaging location. Imaging software is VJ Technologies' industry-proven VI-3 software. This software is configurable at a high level to interface with all x-ray sources and detectors used by VJ Technologies. It is used to acquire and record the "original live" image. Without changing the recorded "original live" image, VI-3 image processing features can be used by operators to facilitate interpreting of the image.

1.1.3.3 Safety Interlocks

Safety interlocks, audible warnings and visual warnings that are compliant with the requirements of ANSI/HPS N43.3 -2008 (Reference 1) are provided.

These include:

- High integrity interlocks on the single vault entry/exit door.
- Pre-x-ray generation audible and visual warnings internal and external to the vault.
- Flashing Red Beacon and Grave Danger sign indicating x-ray operation.

- Radiation detection unit activates an emergency stop if radiation is detected when the vault door is open.

- CCTV cameras monitor the interior of the vault and its entry/exit. The viewing screen is located at the operator's console in the control room.

- Emergency stop system, with button stops and pull cords easily accessible in all areas within the vault, and on the operator console located in the control room.

Four x-ray interlocks are linked to the vault door. When the door is open, two sets of independent interlocks interrupt power to the x-ray generator, and x-rays cannot be generated. One set of interlocks sends a signal to the LINATRON'S safety interface to stop or prevent generation of x-rays when they are not properly mated. The LINATRON cannot operate when the interlocks are in the open position, and the interlocks can be closed only when the door is properly closed.

The second set of interlocks, linked to the radiation monitor installed inside the vault, provides an emergency stop (ES) if the door is open and radiation is sensed within the vault. The second set of interlocks is fully isolated from the first set of interlocks and operates completely independently.

Warning Beacon and Sign

The two warning beacons are located inside the vault and at least one is visible from anywhere within the vault. One beacon is at the vault entrance and the other is above the detector. They are visible in the control room via CCTV screens at the operator's console. The two warning beacons consist of modular lights that snap together to form a light tower. The different colored polycarbonate lenses measure 4 inches diameter and are stacked. The base is made of corrosion resistant, die-cast zinc.

There is a flashing red beacon above the vault door which lights up when the x-ray source is powered up.

Emergency Power Cut Off Switches

These switches enable power to be turned off in an emergency to immediately discontinue x-ray production. Emergency power interrupt switches (Emergency Stops) are located on the operator's console in the control room (the LINAC control console), and the ES pull plug and push button system within the vault.

1.1.3.4 Electrical Power

The HE-RTR System requires electrical support from the Host site to install and operate. The main electrical panel is located in the electrical room of the control room trailer. The vault also has an electrical panel within that services equipment in the vault.

- 208/220 Volts Alternating Current (VAC) Three Phase
- Requires a 200 ampere (amp) service
- A flexible cable from HE-RTR is hardwired to power service from the Host site

External Power Connections

Access to the main electrical power feed panel and communication lines is inside the electrical room of control room trailer. The electrical power cable and communication lines are routed from the electrical power feed panel to the site-supplied distribution panel.

All electrical equipment meets NFPA 70, *National Electric Code* (Reference 2) minimum standards (e.g., enclosures, power interlocks, four-prong plugs, breakers, fuses, Ground-Fault Circuit Interrupters).

Lighting

Ceiling mounted fluorescent lights provide room lighting in the vault and in the control room trailer. The control room trailer also has exterior lights at the doorways. There is no emergency lighting (hard wired or battery powered) provided unless the host site requires it.

Outlets

Duplex receptacles (120 VAC, 15 amp) are positioned along each vault wall and in the control room trailer. Electrical devices, such as receptacles and light switches, are suitable for industrial service and have at least a 15 amp rating. All devices are Underwriters Laboratory listed.

2.0 DESIGN REQUIREMENTS

2.1 Specific Requirements

The HE-RTR system is designed to be assembled, disassembled and moved by truck to another host site as needed. It consists of two main modules, the concrete vault and the control room trailer. The concrete vault is constructed of panels that are assembled into the vault configuration on a concrete pad provided by the host site. The vault has an inner and outer wall, and the annular space is filled with fine aggregate, such as sand. The concrete roof also supports a layer of fine aggregate. The completed vault is then enclosed by a steel shelter to protect it from weather and wind, and maintain the fine aggregate layer on the roof. Vault construction provides shielding that is designed in accordance with ANSI/HPS N43.3-2008 (Reference 1). Vault shield calculations are provided in Attachment 2.

The HE-RTR system combines a high energy radiography system with a software package that is capable of distinguishing differences in materials with relatively similar densities. The unit produces enough energy to penetrate 9 inches of stainless steel, and has the ability to identify liquid or other materials inside thick steel containers. This capability facilitates the search for prohibited items in the wastes being characterized.

The system accommodates 55 gallon drums, 85 gallon drums, and SWBs.

2.2 Codes and Standards

The codes and standards identified as design requirements for the HE-RTR system include the international building code (IBC) and ANSI/HPS N43.3-2008 (Reference 1). The structural portions of the unit were designed in accordance with IBC and the shielding/interlocks were designed in accordance with ANSI/HPS N43.3-2008 (Reference 1).

All electrical installations in the control room trailer and the vault are in accordance with NFPA 70 (Reference 2). Power is received from a host site distribution panel into the main panel in the electrical room of the control room trailer. Power is then distributed to the vault equipment, the modulator located outside the vault, and the electrical systems in the control room.

2.3 Change Control

During CCP operations the following information applies: Changes to the physical configuration of the unit are controlled under CCP-CM-001, *CCP Equipment Change Authorization and Documentation* (Reference 8). Maintenance on the unit is documented under CCP-TP-140, *CCP Equipment Maintenance* (Reference 9).

3.0 OPERATIONAL INFORMATION

3.1 Warnings and Alarms

3.1.1 Emergency Stops

Emergency stops allow personnel to quickly shut off the generation of x-rays in the event of an emergency or abnormal situation. There are seven emergency shutdowns/overrides consisting of push buttons and pull plugs located within the vault and in the control room:

- One push button ES at the operator console (ES-1)
- One push button ES inside the vault near the door (ES-2)
- Five pull plugs inside the vault along the perimeter of the enclosure (ES-3, ES-4, ES-5, ES-6, ES-7)

All ES actuators are connected to normally closed latching switches. All ES switches are wired in series to the control contactor located in the main control junction box. When any one of these switches is opened, the control contactor drops out. This, in turn, drops out the power contactor, which removes electrical power from the x-ray generating device (XGD), detector, vertical manipulators and imaging systems. Power is also removed from the interlock relay, which opens Circuit 2 and inhibits x-ray production.

All ES switches latch in position. To restore the XGD circuit, it is necessary to reset the actuator that was tripped at its physical location. To reinitiate x-rays after ES reset, the x-ray start sequence requires reactivation of the system power keyswitch.

3.1.2 Warning Signals – X-Ray Production

Audible and visible warning signals are provided for x-ray production. These signals include the following:

- Pre-warning signals for 20 seconds before x-ray generation is started
- Warning signals when x-ray generation starts and is on
- Warning signals associated with x-ray production include the following:
  - One Grave Danger sign warning of x-ray operation is located outside the shielded vault door.

- Two warning light stacks with amber and red lights are located inside the vault and are also visible via CCTV at the operator's console. An audible alarm activates when the warning light stack activates.

When the key is turned to "Enable" on the LINAC operating console to initiate x-rays, the pre-warning time begins and the pre-warning annunciators are activated:

- An audible alarm sounds
- The amber warning lights are illuminated

Pre-warning time is adjustable. For this application, it is set to 20 seconds in compliance with ANSI N43.3-2008 (Reference 1). After the end of the pre-warning time, the pre-warning signals stops, and the radiation warning signals start:

- "Beam ON" warning lamp on the LINAC controller is lit.
- Red warning lights flash
- Sign warning of x-ray operation is illuminated

All x-ray warning signals are operated with 110 VAC. They are controlled by the LINAC via two relays in the main control junction box. The pre-warning relay is connected in the safety interlock junction box to Terminal 10, X-Rays Delay Lamp. The "x-ray on" relay is connected to Terminal 9, X-Rays On Lamp. Terminal 11, Lamp (N) is used for the neutral connections of both relays.

3.1.3 Warning Lights

Two sets of x-ray pre-warning alarm stack lights are located in the vault. The amber beacons flash during the alarm which activates 20 seconds before the x-ray is activated, warning the operator that the system is about to energize. The red beacons then activate 10 seconds before the system energizes. Due to the design of the safety interlock system, the HE-RTR cannot be operated with the vault door in the open position.

3.1.4 Fire Protection

The host site's fire protection program dictates the type of fire protection systems required. As a minimum, hand-held fire extinguishers and smoke detectors are usually required in office trailers. Provisions to incorporate the host site's fire protection systems such as alarms, exit lighting and sprinklers are included in the control room trailer. If the host site does not require these items and they are present, they should be identified as "not in service."

3.1.5 Industrial Hazards

Potential hazards with operating and maintaining a LINATRON and associated equipment include the following:

- X-ray exposure
- Electromagnetic interference
- Microwave radiation
- Electrical shock
- Electrical fire
- High temperature surfaces
- SF6
- Implosion
- Hardware that is not securely fastened
- Ozone

The hazards and associated safety precautions discussed below may affect personnel associated with the operation, maintenance and servicing of the LINATRON. In the absence of safe operating practices and precautions, these hazards could result in injuries or death.

Protecting Personnel from X-Ray Exposure

To reduce the risk of unauthorized initiation of the beam, the operator must remove the key from the ENABLE/DISABLE keyswitch at the control console when the x-ray is not intended to be on or started up. The keyswitch is one of the safety interlocks, and x-ray generation cannot be initiated without the key in the switch. If the operator intends to enter the vault, the key must be carried on his/her person.

Electromagnetic Interference

Low levels of electromagnetic radiation are present around the LINATRON when x-rays are being generated. The modulator unit, installed outside the vault, is not protected by the shielding of the vault and may emit sufficient electromagnetic energy to interfere with pacemaker operation. Pacemaker users must avoid the area around the modulator when it is running. Keeping LINATRON system covers, doors and panels closed during operation reduces exposure to electromagnetic radiation.

Before allowing anyone with a pacemaker near the vault or around an operating system, the pacemaker manufacturer should be contacted regarding electromagnetic interference (EMI) susceptibility to the frequency of the LINATRON. The magnetron, which supplies RF power to the BCL, is a dominant contributor of EMI. The LINATRON operating frequency range is 2,992 to 3,004 megahertz (MHz). Other frequencies may also be present.

Microwave Radiation

The magnetron produces high levels of microwave radiation that are directed to the BCL through a transmission waveguide. If the system is used with the waveguide improperly attached or in some other inappropriate configuration, an exposure to high-level microwave radiation may occur. Both the magnetron tube and the transmission waveguide are made of metal which attenuates microwave radiation. Flanges are gasket-sealed to prevent appreciable microwave leakage, but there is a possibility of exposure to low-level microwave radiation.

The result of prolonged exposure to low-level microwave power is a subject of investigation. For more information, refer to IEEE C95.1-1999, *IEEE Standard of Safety Levels with Respect to Human Exposure to Radio Frequency Electromagnetic Fields 3kHz to 300 GHz* (Reference 7).

The Institute of Electrical and Electronics Engineers (IEEE) reference recommends power density limits between 0.2 and 10 milliwatts per centimeters squared (mW/cm^2) for microwaves at the LINATRON magnetron microwave frequency in uncontrolled areas.

Electrical Shock

During operation, the normal voltages in some areas of the LINATRON are over 25 kilovolts (kV). Activating the EMERGENCY OFF circuit removes power from most operating components but not all components. Personnel must assume that some components still have power when the EMERGENCY OFF is activated.

Many high voltage capacitors in the LINATRON remain charged after the source voltage is removed, and several can recharge to dangerous levels even after being discharged.

The LINATRON contains several interlock circuits which are designed to prevent accidental contact with high voltages. Doors, covers, panels and screens that allow access to high voltage areas are provided with door locks or they are interlocked electrically. The interlocking circuit shuts down, but does not de-energize, the LINATRON if any of these doors are opened.

A power supply located in the x-ray head sources 3.5 kV to operate the VacIon pump on the BCL. This system is energized at all times so it is possible to receive a severe shock when removing or attaching any of these connections.

- Before servicing any high voltage circuitry, power must be removed from the high voltage supply by using the shorting sticks provided in the modulator and RF unit to ground the high voltage circuit.

Electrical Fire

All electrical equipment carries the risk of an electrical fire. If smoke or a burning odor is noted, the HE-RTR must be shut down using an emergency stop or other method and the host site and CCP operations management notified. Host site notification procedures must be used.

High-Temperature Surfaces

Many system components, including the thyratron tubes in the modulator cabinet, the magnetron, the transistor heat sinks in the power supplies, and some resistor networks, operate at high temperatures. Some of the components remain dangerously hot long after power is removed from the LINATRON.

Sulfur Hexafluoride (SF6)

Sulfur hexafluoride is a colorless, odorless, nontoxic gas used as a dielectric to suppress arcing in the transmission waveguide. The gas is stored as a liquid under pressure of approximately 300 pounds per square inch (psi) in a reusable metal container available from most industrial gas suppliers.

Although sulfur hexafluoride is nontoxic, it may act as an asphyxiate by displacing oxygen. Also, arcing in the transmission waveguide can cause sulfur hexafluoride to break down into toxic fluorine, metal fluoride, hydrofluoric (HF) acid, and sulfur compounds. Because of the possibility of toxic byproducts in the SF6, service work involving discharge of gas from the dielectric gas system must be done in a well ventilated area. SF6 containers must be used and stored at less than 125° F (52° C).

Implosion

Because of the internal vacuum in the magnetron and BCL, the ceramic and glass windows that separate the vacuum from the transmission waveguide can shatter inward (implode) if struck with a hard object or subjected to mechanical shock. The thyratron tubes in the modulator cabinet can also implode.

Flying debris from an implosion could result in injuries such as cuts and puncture wounds. As a safety precaution, when working with or near any part of the LINATRON that contains a vacuum, appropriate protective gear must be worn.

Hardware That Is Not Securely Fastened

Nuts, bolts, and other fasteners can vibrate loose during normal operation and fall from equipment, leaving system components not securely fastened. These components may move or fall, resulting in injuries to personnel or damage to equipment.

Ozone

LINATRON operation can produce detectable levels of ozone in the vault. Photon-producing LINATRON machines require four to six air changes per hour to maintain nondetectable ozone levels, depending on the size of the room and air circulation efficiency. Ventilation required to remove equipment heat that dissipates into the vault air normally accomplishes this. The ventilation system should be designed to use fresh make up air. The HE-RTR should not be operated if the vault ventilation system is not in operation. Long irradiations at high dose rates should be followed by airing out the vault before it is entered. Sufficient time must be allowed to bring the ozone down to an acceptable level for entry.

3.1.6 Operating Environment and Natural Phenomena

The HE-RTR characterization unit and associated equipment was not required to be designed and built to DOE Natural Phenomena Hazard standards. The equipment is seismically qualified. The HE-RTR was designed to withstand earthquakes at Los Alamos National Laboratory (LANL).

3.1.7 Security/Television Monitoring Systems

The operator control room contains CCTV monitors that provide constant visual surveillance of the vault interior including the cart and rail system. Audible and visual alarms are provided to warn nearby personnel of impending and actual x-ray generation.

Closed-circuit TV cameras are located in the vault and positioned to observe operations inside. The CCTV cameras, are used by the operator to ensure that all personnel are out of the vault and clear of the area before x-ray operations commence, and to observe the mechanical systems during operation.

Camera images are displayed on the surveillance monitor mounted above the control console. The surveillance monitor is selectable and may display any of the four camera images, automatically switch from one image to another, or display all four camera images at once (quad display).

Controlled
Copy

4.0 REFERENCES

1. ANSI/HPS N43.3-2008, *Installations Using Non-Medical X-Ray and Sealed Gamma-Ray Sources, Energies up to 10 MeV*

2. NFPA 70, *National Electrical Code*, National Fire Protection Association

3. DOE/WIPP-02-3122, *Transuranic Waste Acceptance Criteria for the Waste Isolation Pilot Plant*

4. CCP-PO-001, *CCP Transuranic Waste Characterization Quality Assurance Project Plan*

5. CCP-PO-002, *CCP Transuranic Waste Certification Plan*

6. CCP-PO-003, *CCP Transuranic Authorized Methods for Payload Control (CCP CH-TRAMPAC)*

7. IEEE C95.1-1999, *IEEE Standard Safety Levels with Respect to Human Exposure to Radio Frequency Electromagnetic Fields 3 KHz to 300 GHz*

8. CCP-CM-001, *CCP Equipment Change Authorization and Documentation*

9. CCP-TP-140, *CCP Equipment Maintenance*

Attachment 1 – Equipment Setup Requirements

Equipment: High Energy Real-Time Radiography Unit (HE-RTR)

Summary: Table below contains information regarding general site installation and preparation information for HE-RTR.

Installation Specifications:

Foundation	Build a foundation of size 40' X 51'
Primary Electrical Requirements (including overcurrent protection and grounding)	The Mobile HE-RTR System requires electrical support from the Host site to operate. 208/220 VAC Three Phase Requires a 200 amp service. External Power Connections: The access to the electrical power feed panel and the communication lines is inside the electrical room of the HE-RTR trailer. The electrical power cable and communication lines are routed from the electrical power feed panel to the site supplied distribution panel. All electrical equipment meets NFPA 70, *National Electric Code* (Reference 2), minimum standards (e.g., enclosures, power interlocks, four-prong plugs, breakers, fuses, Ground-Fault Circuit Interrupters).
Fire Suppression	To be provided by Host site. There is a location intended for a fire extinguisher in the control room.

Attachment 1 – Equipment Setup Requirements (Continued)

Emergency Egress	Structures should not be located where they impede or otherwise hinder personnel egress or ingress to, or within, other facilities or structures. Structures should not be located where they impede or otherwise hinder the access of emergency response vehicles to other facilities or structures. Structures shall be placed so emergency vehicles can operate within 100 feet of the structure. The space between the structure and the road should be free of natural obstructions that would prevent or severely restrict access by emergency responders. Security barriers should be designed in a manner that permits emergency access. Landscaping and similar non-essential obstructions should not restrict emergency access. Site location for structures should be evaluated for wildland fire exposures.

Attachment 2 – Shield Calculations

Assumptions

- Radiation source is a Varian Linatron M6 model with a nominal energy of 6 MeV
- Output of the radiation source is 8.0 Gray (Gy)/minute (min) (800 Rads) at 1 meter. Source: Varian
- Radiation source will have the Ultra Low Leakage Option which will ensure that the 6 MeV radiation leakage will not be greater than 1 x 10^{-6} of the primary beam at 1 meter (0.000008 Gy/min) Source: Varian
- Maximum permissible dose outside of the shielding will be less than 0.5 mR/hour measured at 2 inches from the surface
- Personnel limits are as provided in ANSI/HPS N43.3-2008 For General Radiation Safety

  – Installations Using Non-Medical X-Ray and Sealed Gamma-Ray Sources, Energies Up to 10 MeV
- The number of rems may be considered equivalent to the number of rads of absorbed dose in tissue or to the number of roentgens of exposure. Source: National Council on Radiation Protection (NCRP) Report No. 49.
- Induced radioactivity in the air and treatment room is negligible for installations operating at up to 10 MeV. Source: NCRP Report No. 49.
- Tenth Value Layer (TVL) concrete for 6 MeV = 34.5 cm
- TVL lead for 6 MeV = 5.6 cm
- TVL steel for 6 MeV = 9.9 cm
  Note: TVL values taken from ANSI/HPS N43.3-2008
- TVL Sand (aggregate) for 6 MeV = 46.6 cm (interpolated)
- Accelerator will only be operated with the x-ray source in the direction and distance noted on VJ Technologies Drawing Number AP0000152
- Remaining walls and ceiling will be classified as secondary barriers
- Conversions: 1 Gy = 100 Rads and 1 Sievert (Sv) = 100 rems

Attachment 2 – Shield Calculations (Continued)

Computation of Barrier Requirements

There are barrier walls identified as follows:

Primary Wall	- wall directly in line with incident beam
Secondary Wall	- side wall adjacent to x-ray source
Secondary Wall (open)	- side wall next to Linac on side where parts enter and exit
Back Wall	- wall 180° opposite primary beam
Far Secondary Wall	- side wall where parts enter and exit

Distances from incident beam to outside of barrier:

Primary Wall	18 feet
Secondary Wall	12 feet
Secondary Wall (open)	10 feet
Back Wall	12 feet
Far Secondary Wall	24 feet
Ceiling	10 feet

Dose output at those locations and distances (no shielding):

Primary Wall	1,594,653 mR/Hr
Secondary Wall	2153 mR/Hr
Secondary Wall (open)	3100 mR/Hr
Back Wall	1076 mR/Hr
Far Secondary Wall	538 mR/Hr
Ceiling	3100 mR/Hr

In order to bring the dose down to 0.5 mR/Hr, number of TVL required:

Primary Wall	6.50 TVL
Secondary Wall	3.63 TVL
Secondary Wall (open)	3.79 TVL
Back Wall	3.33 TVL
Far Secondary Wall	3.03 TVL
Ceiling	3.79 TVL

Attachment 2 – Shield Calculations (Continued)

At 6 MeV, 16 inches of concrete (2 x 8 inches) = 1.18 TVL. Subtracting 1.18 TVL from each location equals the number of TVL remaining. Multiply the number of TVL remaining by the TVL of sand provides the thickness of sand required.

Primary Wall	6.50 TVL-1.18 TVL= 5.32 TVL x 46.6 cm = 97.6 in Sand
Secondary Wall	3.63 TVL-1.18 TVL= 2.45 TVL x 46.6 cm = 44.9 in Sand
Secondary Wall (open)	3.79 TVL-1.18 TVL= 2.61 TVL x 46.6 cm = 47.9 in Sand
Back Wall	3.33 TVL-1.18 TVL= 2.15 TVL x 46.6 cm = 39.4 in Sand
Far Secondary Wall	3.03 TVL-1.18 TVL= 1.85 TVL x 46.6 cm = 33.9 in Sand
Ceiling	3.79 TVL-1.18 TVL= 2.61 TVL x 46.6 cm = 47.9 in Sand

Note: TVL requirements are based upon an exposure limit of 0.5 mR/hour measured at 2 cm from the surface. TVL is known as the tenth-value layer which is defined as the thickness of a specified substance which, when introduced into the path of a given beam of radiation, reduces the exposure rate to one-tenth.

Attachment 3- HE-RTR Hazards and Controls

Hazard	Comments	Control
Asphyxiates	Sulfur hexafluoride (SF6) is a colorless, odorless, non toxic gas that can displace breathing air if enough accumulates in a confined space.	SF6 is used in a closed system and is not normally vented.
Chemicals	The transmission waveguide uses sulfur hexafluoride (SF6) as a dielectric gas to suppress arcing. The gas is stored as a liquid at approximately 300 psi in a cylinder.	Sulfur hexafluoride is a colorless, odorless, nontoxic gas. If arcing occurs in the transmission waveguide, SF6 can break down into highly toxic and corrosive byproducts such as hydrofluoric acid, fluorine, fluoride and sulfur compounds. Service work on this system requires adequate ventilation to avoid potential exposure to toxic byproducts. Discharge of SF6 from the dielectric gas system must be done in a well ventilated area. Breathing escaping gas must be avoided. If the area cannot be adequately ventilated, respiratory protection must be provided when venting gas. SF6 containers must be stored and used at less than 125°F (52°C). SF6 cylinders contain high pressure liquid that expands rapidly into a gas. Body parts must remain clear of the pressure relief valve at all times, and the vent valve if venting gas. Cylinders must be handled carefully to avoid damage to the valves.
	Coolant (50% Dow Therm SR1 and 50% distilled water) in the temperature control unit is used to remove heat from components.	Skin contact should be avoided, and appropriate gloves worn when working with coolants.
	Ozone may be generated by high voltage electric fields in the x-ray generator.	Ozone is a respiratory irritant. The LINATRON can produce detectable levels of ozone in the vault, particularly during long irradiations at high dose rates.

Attachment 3- HE-RTR Hazards and Controls (Continued)

Hazard	Comments	Control
Combustibles	Hydraulic oils, lubricant oils	Skin contact with oils and lubricants should be avoided, and appropriate gloves worn when working with coolants. The relatively small amount of oil present in closed systems within equipment components should not present a fire danger.
Confined Space	The vault does meet Occupational Safety and Health Administration's (OSHA) criteria for being a confined space, and does not meet OSHA's criteria for being a permit-required confined space (29 Code of Federal Regulations [CFR] 1910.146).	The vault was evaluated using OSHA confined space criteria, and is classified as a non-regulated confined space, in accordance with the OSHA requirement to evaluate potential work spaces. There are no specific obligations under 29 CFR 1910.146 (permit-required confined spaces) with respect to this space.
Corrosives	SF6 breakdown due to arcing in the dielectric gas chamber may include hydrofluoric acid and other corrosive fluorine and sulfur byproducts.	SF6 is used in a closed system that is not normally vented. If the SF6 system is vented during servicing, precautions must be taken to avoid exposure to corrosive and highly toxic chemicals that may be present in the vented gas. The vault ventilation system must be operating while SF6 is vented. Additional ventilation must be provided to change air faster during venting.
Egress	The vault has one solid, shielded door. The control room trailer has two exit doors, one in each room.	Vault door opening and closing is controlled remotely at the operator's console. There is also a manual door open/close switch interior to the door itself, so that the forklift driver has control of the shield door to preclude inadvertent remote door closure. The vault is not normally occupied by personnel and is classified as equipment rather than an occupancy area. Trailer exit doors have windows, and open directly outdoors. Because the doors are clearly identifiable as exits, the National Fire Protection Association standard does not require them to be marked as exits. The doors may be marked as exits if the host site requires exit signs/exit lighting. Trailer indoor and outdoor lighting is operated by interior wall switches.

Attachment 3- HE-RTR Hazards and Controls (Continued)

Hazard	Comments	Control
Electrical	Power requirement is 208/220 Volts AC, 200 amp service, hard wired via flexible cable from host site power distribution to the main power panel in the trailer.	All electrical equipment meets NFPA 70 (Reference 2), National Electric Code minimum standards for enclosures, power interlocks, 4-prong plugs, breakers, fuses, ground fault circuit interrupters. Receptacles and light switches are suitable for industrial service and have at least a 15 amp rating. All electrical devices are Underwriters Laboratory (UL) listed.
	During operation, normal voltages in some parts of the LINATRON are over 25 kilovolts (kV). Activating an ES removes power from most, but not all operating components.	Personnel must assume that some electrical components still have power if ES is activated, and avoid contact. Lockout/Tagout in accordance with host site requirements must be used for any electrical work.
	High voltage capacitors in the LINATRON remain charged after the source voltage is removed. Several can recharge to dangerous levels even after being discharged.	Personnel must assume that electrical components still have power after being disconnected, and avoid contact. Lockout/Tagout in accordance with host site requirements must be used for any electrical work on this system.
	The LINATRON contains interlock circuits which are designed to prevent accidental contact with high voltages.	LINATRON doors, covers, panels and screens that allow access to high voltage areas are provided with door locks or are electrically interlocked to shut off power to the LINATRON if any of these doors are opened.
	A power supply in the x-ray head sources 3.5 kV, and is energized at all times.	Contact with this unit and its' connections is to be avoided. Lockout/Tagout in accordance with host site requirements must be used for any electrical work on this system.
	Power must be removed from the high voltage supply before servicing any high voltage circuitry.	Shorting sticks are provided in the modulator and RF units to ground the high voltage circuits. Lockout/Tagout in accordance with host site requirements must be used for any electrical work.
Ergonomics	Controls are located at the operator console.	An ergonomic office chair should be used to enable adjustments in height and support for the different operators.

Attachment 3- HE-RTR Hazards and Controls (Continued)

Hazard	Comments	Control
Fire	Host site requirements for fire protection vary. The HE-RTR is equipped with smoke detectors, and provisions are made for hand held fire extinguishers in the vault and control room trailer.	The HE-RTR does not meet any of the DOE Order 420.1B criteria for which an automatic fire suppression system is required. It does not have an automatic fire suppression system. The HE-RTR control room trailer and vault are not equipped with a fire alarm system based on the National Fire Protection Association (NFPA) occupancy type and projected number of occupants. The vault's concrete and steel construction is non combustible. The cart, rails, turntable and vertical manipulators are made of steel and are non combustible. Electrical components, wiring, cooling systems and hydraulics may contain combustible materials such as wiring insulation, coolant and hydraulic oil. Potential ignition sources in the vault include electrical short circuits and potential for forklift sparking. With the non-combustible structure, contents and surface finish, a fire in the vault is not likely to spread. The control room trailer is of ordinary trailer construction with textured vinyl interior walls. Potential ignition sources in the trailer include electrical short circuits and faulty office equipment. With the combustible structure, contents and surface finish, a fire in the trailer is likely to quickly consume the trailer. Smoke detectors can be linked to the host site fire alarm system. Fire extinguishers and extinguisher locations must meet the requirements of the host site. Additional links to host site fire systems may be made as locally required for: fire alarms/strobes, fire pull boxes, sprinklers, lighted exit signs and emergency lighting.

Attachment 3- HE-RTR Hazards and Controls (Continued)

Hazard	Comments	Control
Heat	System components including thyratron tubes in the modulator cabinet, the magnetron, the transistor heat sinks in the power supplies, and some resistor networks operate at high temperature. Some remain dangerously hot long after power is removed from the LINATRON.	Contact with lamps, heat sinks, thyratron tubes or any other component that feels warm upon approach must be avoided. If warm or hot equipment components must be handled, insulated gloves are required. Hot components must be allowed to cool down before they are handled or worked on.
	The vault has electric heaters to maintain minimum temperature.	Heaters are controlled by adjustable thermostat.
	The control room trailer is heated electrically.	Heaters are controlled by adjustable thermostat.

Attachment 3- HE-RTR Hazards and Controls (Continued)

Hazard	Comments	Control
Kinetic Energy	The cart moves laterally along the rails in the vault.	There is no manual switch inside the vault to activate the cart on its rails, so it cannot be accidentally activated while people are present. There is an interlock at the vault door that prevents cart activation when the door is open. Maintenance adjustments that must be made with people present in the vault must be performed under a host site-approved work package.
	The turntable rotates on the cart.	There is no manual switch inside the vault to activate the turntable, so it cannot be accidentally activated while people are present. There is an interlock at the vault door that prevents turntable activation when the door is open. Maintenance adjustments that must be made with people present in the vault must be performed under a host site-approved work package.
	The vertical manipulators mechanically raise and lower the x-ray source and detector.	There is no manual switch inside the vault to activate the vertical manipulators, so they cannot be accidentally activated while people are present. There is an interlock at the vault door that prevents vertical manipulator activation when the door is open. Maintenance adjustments that must be made with people present in the vault must be performed under a host site-approved work package.
	The vault shield door moves laterally.	The vault shield door is equipped with pressure sensitive bumper switches that stop the opening or closing if anything is encountered. On contact, the door will stop and retract slightly in the opposite direction if an object is sensed.
	Other moving parts.	Other moving parts are enclosed within equipment enclosures. Access panels on the enclosures are either locked to prevent access, or interlocked to de-energize equipment if the panel/door is opened.

Attachment 3- HE-RTR Hazards and Controls (Continued)

Hazard	Comments	Control
Lead	The vault door is constructed of lead sandwiched between steel plates.	Lead shielding in the vault door is entirely enclosed by protective steel plates.
Noise	The HE-RTR operates quietly.	No personnel shall be in the vault while equipment is running. The operator is located in the control room, remote from the equipment.
Pinch Points	Pinch points may be present at the cart bumpers, door edge bumper and at the vertical manipulators.	Pinch points should be labeled. The cart and vertical manipulators are interlocked so they cannot operate when the door is open. Maintenance adjustments that must be made with people present in the vault must be performed under a host site-approved work package. The door bumper acts as an emergency stop.
Potential Energy	The sulfur hexafluoride cylinder is pressurized at 300 psi.	SF6 cylinder is securely mounted internally in the RF module. Spare containers are not kept at site.
Sharp Edges	Equipment and enclosures may have sharp metal edges.	Appropriate gloves must be worn if hands must be placed into spaces or enclosures that have the potential for sharp edges.
Slip/Trip/Fall	The control room trailer is one step up from grade. Control room trailer floor can become wet as door is opened in rain/snow conditions. The vault has raised rails mounted on the floor to move the cart from the loading position to the characterization position. There is also conduit on the vault floor.	The step up into the trailer is approximately the height of a standard stair, and a handrail is not necessary unless required by the host site. The edge of the door sill can be taped or painted yellow to increase visibility. Slip resistant weather mats should be used to avoid tracking rain/snow into the trailer when the door is opened. Personnel moving about the vault must be aware of the raised rails and conduit present. The area containing rails and conduit is considered to be equipment and is not a normally occupied space.

Attachment 3- HE-RTR Hazards and Controls (Continued)

Hazard	Comments	Control
X-Rays	The LINATRON generates x-rays up to 6 MeV in a narrow beam aimed at a target.	The vault is constructed of shielding concrete and fine aggregate so that the outer wall surface emits a dose rate of 0.5 mR/hr or less, qualifying for exempt shielded status under ANSI/HPS N43.2-2008. The single vault door is constructed of lead-lined steel. X-ray generation is interlocked to the vault door so x-rays cannot be generated if the door is open. A radiation detector is interlocked to the vault door to disconnect LINATRON power so x-rays cannot be generated if radiation is detected while the door is open. Emergency Stops are wired in series so that any one activated disconnects power to the LINATRON and x-rays cannot be generated. ES must be manually reset at the location where activated before the operation can resume. Generation of x-rays cannot occur without the enable/disable key in place in the Linatron console. If the operator leaves the control room, he/she must take the key with him/her. The operator verifies via CCTV that the vault is vacated prior to initiating x-ray generation. Warning lights, signs, and audible alarms notify personnel of x-ray generation warm up and on status.