Controlled
Copy

CCP-CM-022

Revision 1

CCP
Gas Generation Testing (GGT)
Canister (GGT-55gal. 01 through 44)
(GGT-85gal. – 01 through 04) and MGSS
(MGSS 01 and MGSS 02)
Equipment Description

EFFECTIVE DATE: 02/16/2010

Larry Porter
PRINTED NAME

APPROVED FOR USE

Controlled
Copy

RECORD OF REVISION

Revision Number	Date Approved	Description of Revision
0	04/16/2007	Initial issue.
1	02/16/2010	Revised to update electrical power supply, external dose rate information, and conditions as found during MA-CCP-0025-09.

TABLE OF CONTENTS

1.0 SYSTEM DESCRIPTION 5
1.1 Facility Major Components, and Subsystems 5
1.1.1 Facility 5
1.1.2 Unit Description 6
1.1.3 Major Components 6
1.1.3.1 Gas Generation Test Canister 6
1.1.3.2 Heater/Power Supply Cabinet 7
1.1.3.3 Mobile Gas Sampling System (MGSS) 13
1.1.3.4 Other Major Components 15
1.1.4 Subsystems 15
1.1.4.1 Civil and Structural 16
1.1.4.2 Chemical and Process 16
1.1.4.3 Electrical Power 16

2.0 DESIGN REQUIREMENTS 17
2.1 Specific Requirements 17
2.2 Codes and Standards 17
2.3 Configuration Management 17

3.0 OPERATIONAL INFORMATION 18
3.1 System Control Features 18
3.1.1 Fire Protection 18
3.1.2 Radiation and Other Hazards 18
3.1.2.1 As Low As Reasonably Achievable (ALARA) 18
3.1.3 Industrial Hazards 19
3.1.3.1 Compressed Gas Cylinders 19
3.1.4 Maintenance 19

4.0 REFERENCES 20

LIST OF ATTACHMENTS

Attachment 1 – Equipment Setup Requirements 22
Attachment 2 – Available References in CCP Records 23

LIST OF FIGURES

Figure 1. 55-gallon GGTC 8
Figure 2. 55-gallon GGTC Heating System Schematic (Option 1) 9
Figure 3. 55-gallon GGTC Heating System Schematic (Option 2) 10
Figure 4. 85-gallon GGTC 11
Figure 5. 85-gallon GGTC Heating System Schematic 12
Figure 6. MGSS Sampling Method 14

SUMMARY

The Gas Generation Testing (GGT) is designed to determine the Hydrogen concentration and then determine the hydrogen generation rate, the hydrogen/methane (H_2/CH_4) generation rate, and the total gas generation rate of the drum intended for shipment in the Transuranic (TRU) Package Transporter-II (TRUPAC-II) or HalfPACT package. The GGT consists of Gas Generation Test Canisters (GGTC) (Equipment #GGT-55gal. 01 through 44 and #GGT-85gal 01 through 04) and Mobile Gas Sampling System (MGSS) (MGSS 01 and MGSS 02). The U.S. Department of Energy (DOE)/Waste Isolation Pilot Plant (WIPP)-01-3187, *Quality Assurance Program Plan for TRUPACT-II Gas Generation Test Program* (QAPP) (Reference 1) provides the basis of the GGT. The QAPP describes GGT methods generally without providing specific details on the type of equipment used. The testing method used by the Central Characterization Project (CCP) for full container testing is the GGTC or bell jar measurement method. The GGTC or bell jar measurement method involves measuring parameters from gas contained between the drum and the canister that encloses the drum. GGTC pressure and temperature are recorded and gas concentration is determined using a MGSS. CCP-PO-016, *CCP Gas Generation Testing Program Quality Assurance Project Plan* (QAPjP) (Reference 5) is a subset of the overall CCP Quality Assurance program described in CCP-PO-002, *CCP Transuranic Waste Certification Plan* (Reference 2); it implements the quality assurance and quality control requirements of DOE/WIPP-01-3187.

The GGT will provide an analysis that is designed to meet the requirements of the WIPP QAPP (Reference 1), CCP-PO-002, (Reference 2), and DOE/WIPP-02-3122, *WIPP Waste Acceptance Criteria* (WIPP WAC) (Reference 3).

This Equipment Description is a central coordinating link among the engineering design documents, the facility authorization basis, and implementing procedures. This Equipment Description does not originate requirements or basis information, but rather collects that information into a convenient usable form. The Equipment Description consolidates information about the GGT into one document.

1.0 SYSTEM DESCRIPTION

The GGT Unit utilizes a GGTC or bell jar (Figure 1, 55-Gallon GGTC, and Figure 4, 85-Gallon GGTC) measurement method, which involves measuring parameters from gas contained between the drum and the canister that encloses the drum. GGTC pressure and temperature are recorded and gas concentration is determined using a MGSS (Figure 6, MGSS Sampling Method and Photographs 1, 3, and 4 of Reference 4).

The GGTC is a bell jar that encloses a waste drum and accumulates all the gases generated from this drum. Since all drums selected for the test are equipped with a filtered vent in the lid, opening the drum is unnecessary in order to collect the gases. The GGTC isolates the waste drum to measure temperature and pressure and for sampling to determine the hydrogen concentration. The system determines the hydrogen generation rate and uses either actual methane/hydrogen (CH_4/H_2) ratios from headspace or a correction factor, per CCP-PO-016, Table 4-3, to determine the H_2/CH_4 generation rate. It uses the temperature and pressure to determine the total gas generation rate.

CCP is responsible for establishing the headspace concentration of methane and Volatile Organic Compounds (VOCs) for each drum tested. This information will be used to ensure that shipped drums satisfy the limits on flammable VOCs in accordance with CCP-PO-003, *CCP Transuranic Authorized Methods for Payload Control (CCP CH-TRAMPAC)* (Reference 6) and are outside the scope of this Equipment Description.

There are four phases in sampling:

- Pre-sampling is the time from drum isolation to initial sampling day
- Initial Sampling is the day the first sample is taken from the GGTC
- Final Sampling is the day the final sample is taken from GGTC
- The final phase is Post Sampling where the GGTCs are powered down to cool

Additional samples may be taken, at the direction of lead operator by using the Initial Sample section of CCP-TP-083, *CCP Gas Generation Testing* (Reference 7).

1.1 Facility Major Components, and Subsystems

1.1.1 Facility

The GGTC Unit is primarily a group of components that are set up within a facility where they are protected from direct exposure to the elements. A number of sites have

elected to set up multiple GGTCs within a facility, to increase the throughput of the overall gas sampling and measurement process.

1.1.2 Unit Description

The weight and footprint dimensions of the GGTC and the MGSS are as follows:

- 55-gallon GGTC weight - 200 pounds per unit (without drum)
- 85-gallon GGTC weight - 1258 pounds per unit (with drum)
- 55-gallon GGTC footprint – 9 square feet each (3 feet by 3 feet) for "roll around" units w/casters
  16 square feet each (4 feet by 4 feet) for stationary Advanced Mixed Waste Treatment Plant (AMWTP) and Bechtel, Babcock and Wilcox, Idaho, LLC (BBWI) units on plastic pallets
- 85-gallon GGTC footprint – approximately 11 square feet each ($3\ ^{1}/_{3}$ foot by $3\ ^{1}/_{3}$ foot)
- MGSS -150 pounds with wheeled cart
- MGSS footprint -12 square feet (5 feet by 2½ feet)

The MGSS cart shall not obstruct ingress and egress by personnel. Adequate service area for operation of forklifts for drum movement is required.

1.1.3 Major Components

The GGT is comprised of the following major system components:

- GGTC (55-gallon or 85-gallon)
- MGSS cart

1.1.3.1 Gas Generation Test Canister

The GGTC or bell jar encloses a waste drum and accumulates all the gases generated from this drum. Both 55-gallon and 85-gallon bell jars may be used.

Schematics with the GGTC and heating system (55-gallon) are shown in the following figures; Figure 1, 55-gallon GGTC, which shows the configuration of the 55-gallon GGTC; Figure 2, 55-gallon GGTC Heating System Schematic (Option 1), which shows one of the configurations of the 55-gallon GGTC Heating Systems; and Figure 3,

55-gallon GGTC Heating System Schematic (Option 2), which shows the other configurations of the 55-gallon GGTC Heating System. Figure 4, 85-gallon GGTC, shows the configurations of the 85-gallon GGTC. Figure 5, 85-gallon GGTC Heating System Schematic, shows the configurations of the 85-gallon GGTC Heating System. The following equipment is installed and included on the schematics:

- Inlet Valve Manifold (Inlet Valve and Outlet Valve with Sample Port)
- Outlet Manifold with Outlet Value, Sample Port and Pressure Gauge
- Relief Valve with manifold to Outlet Value
- Thermocouple Probe
- Optional second Outlet Manifold with valve (for leak testing)
- Temperature Control Box (TCB)

The waste drum to be tested is loaded into a GGTC in accordance with CCP-TP-083. A leak test of the GGTC is performed upon loading the drum into GGTC and prior to starting the heating of the GGTC. The drum is heated gradually to the test temperature, 135°F or 148°F, as specified in Table 4-1 of CCP-PO-016. To ensure that the waste and the gases within the test canister are thoroughly heated and the system has reached equilibrium or steady state condition, a minimum of 120 hours (after isolation) must elapse before the initial sample is taken. Sampling prior to reaching this steady state condition could result in a false failure. The final sample is drawn at greater than, or equal to, 240 hours after drum isolation, to determine the gas generation rates characteristics of the waste drum inside. The minimum time between the initial and final sample is 48 hours.

1.1.3.2 Heater/Power Supply Cabinet

The Heater/Power supply cabinet is a Model CN777000 series controller with dual displays for simultaneous display of measured value and setpoint (Reference 8).

Controlled
Copy

Figure 1. 55-gallon GGTC

55-gallon GAS GENERATION TEST CANISTER

NOTE: *The actual box may be mounted differently than displayed here.*

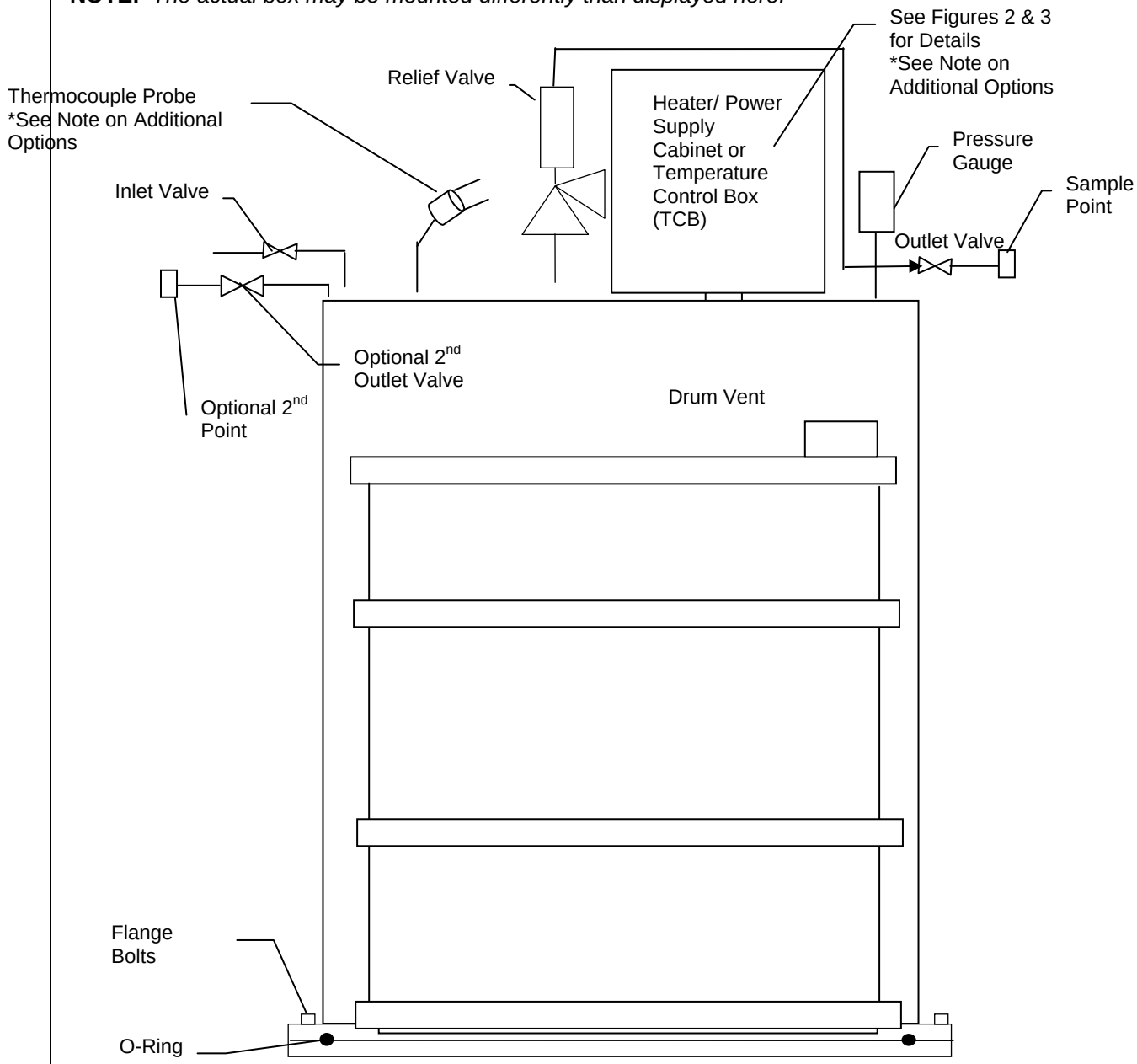

*Note additional options (for nitrated salts) include:

- TCB with inputs for 2 thermocouples (Redundant) and a different heater automatic shut off switch.
- Use of two thermocouple probes for redundant over temperature shut off.

Controlled
Copy

Figure 2. 55-gallon GGTC Heating System Schematic (Option 1)

Heater/Power Supply Cabinet or Temperature Control Box (TCB)

NOTE: *Indicator colors are as found on AMWTP units at Idaho National Laboratory (INL)*

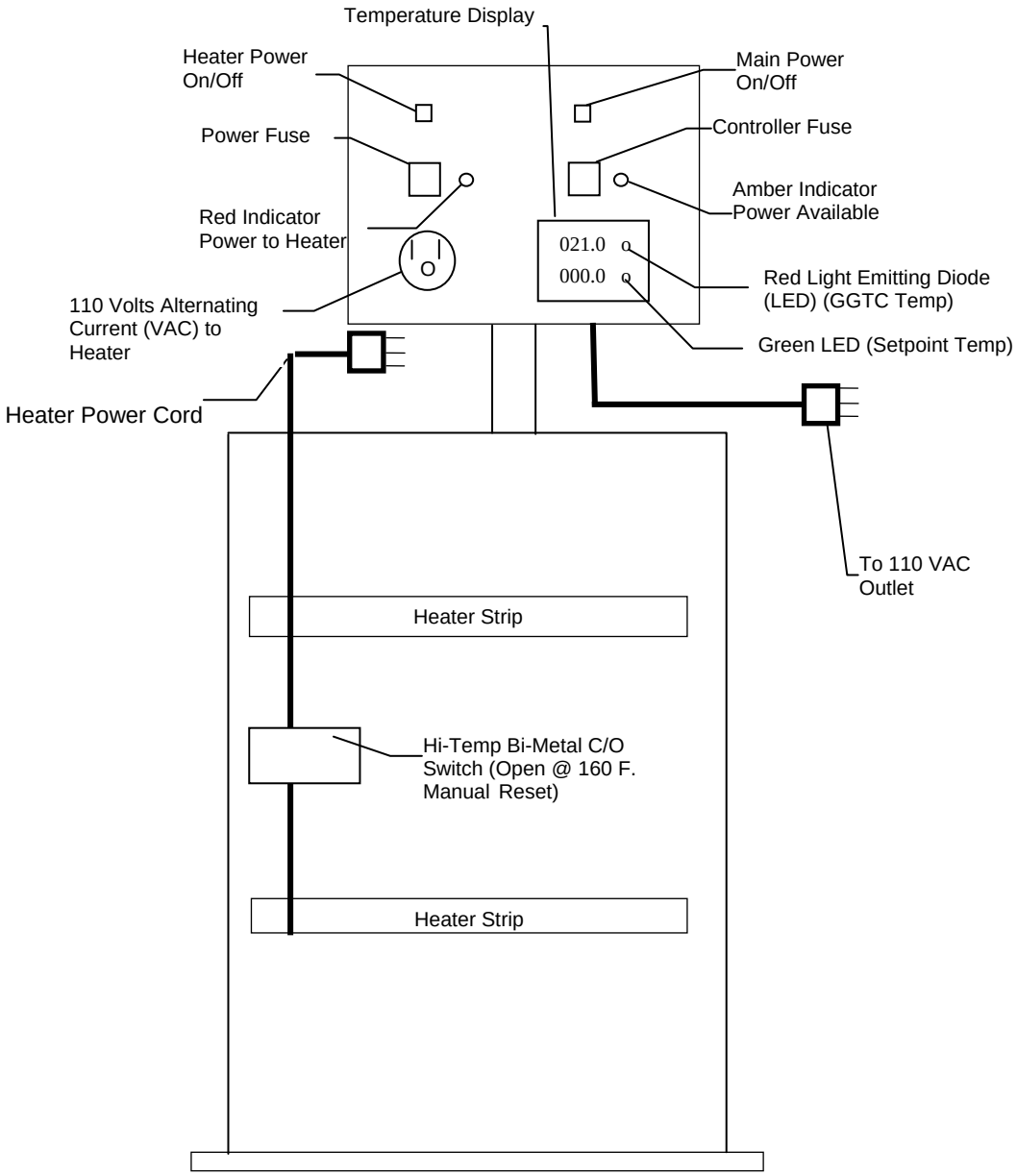

Controlled
Copy

Figure 3. 55-gallon GGTC Heating System Schematic (Option 2)

Heater/Power Supply Cabinet or Temperature Control Box (TCB)

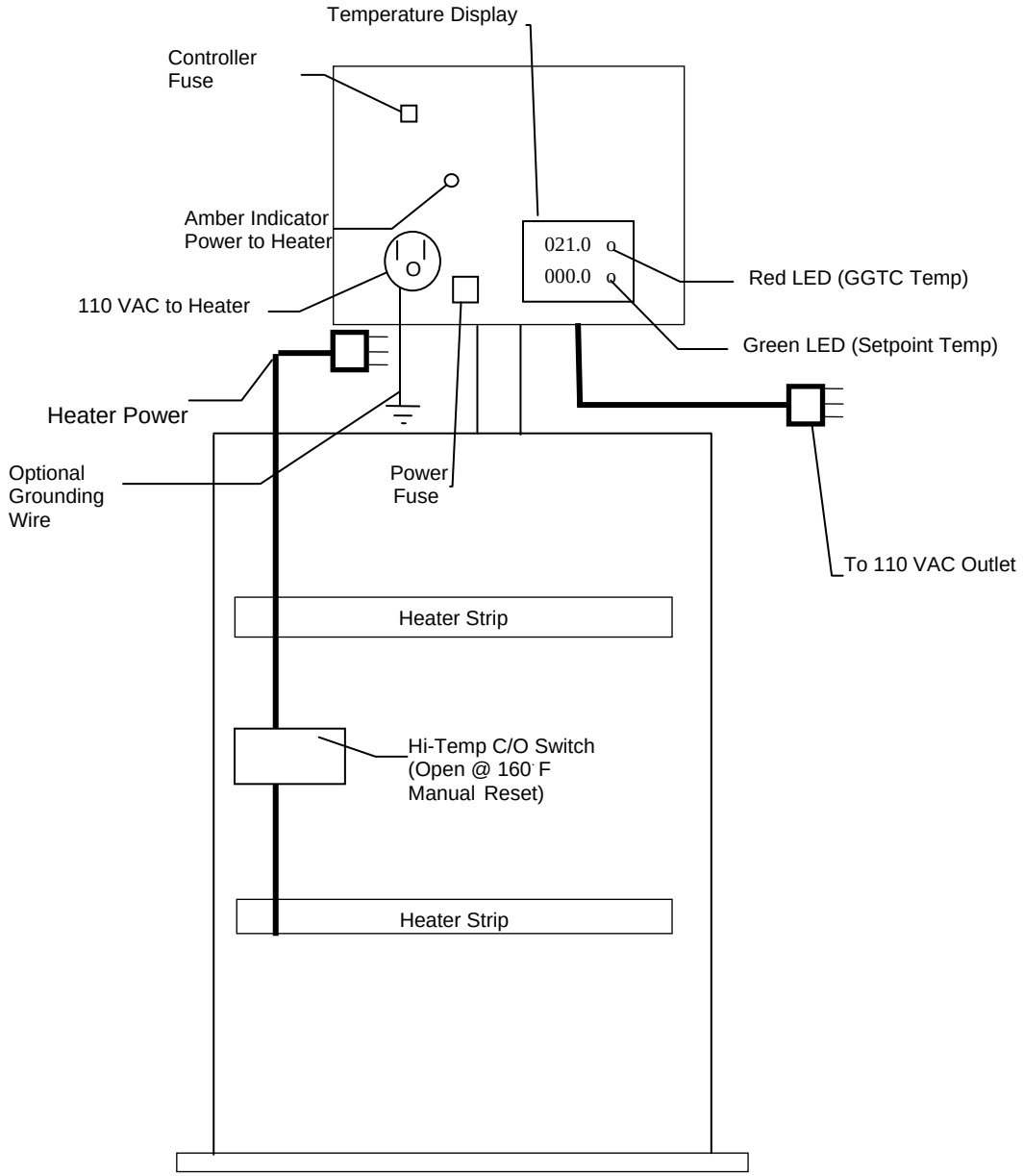

Controlled
Copy

Figure 4. 85-gallon GGTC

85-gallon GAS GENERATION TEST CANISTER

NOTE: *The actual box may be mounted differently than displayed here.*

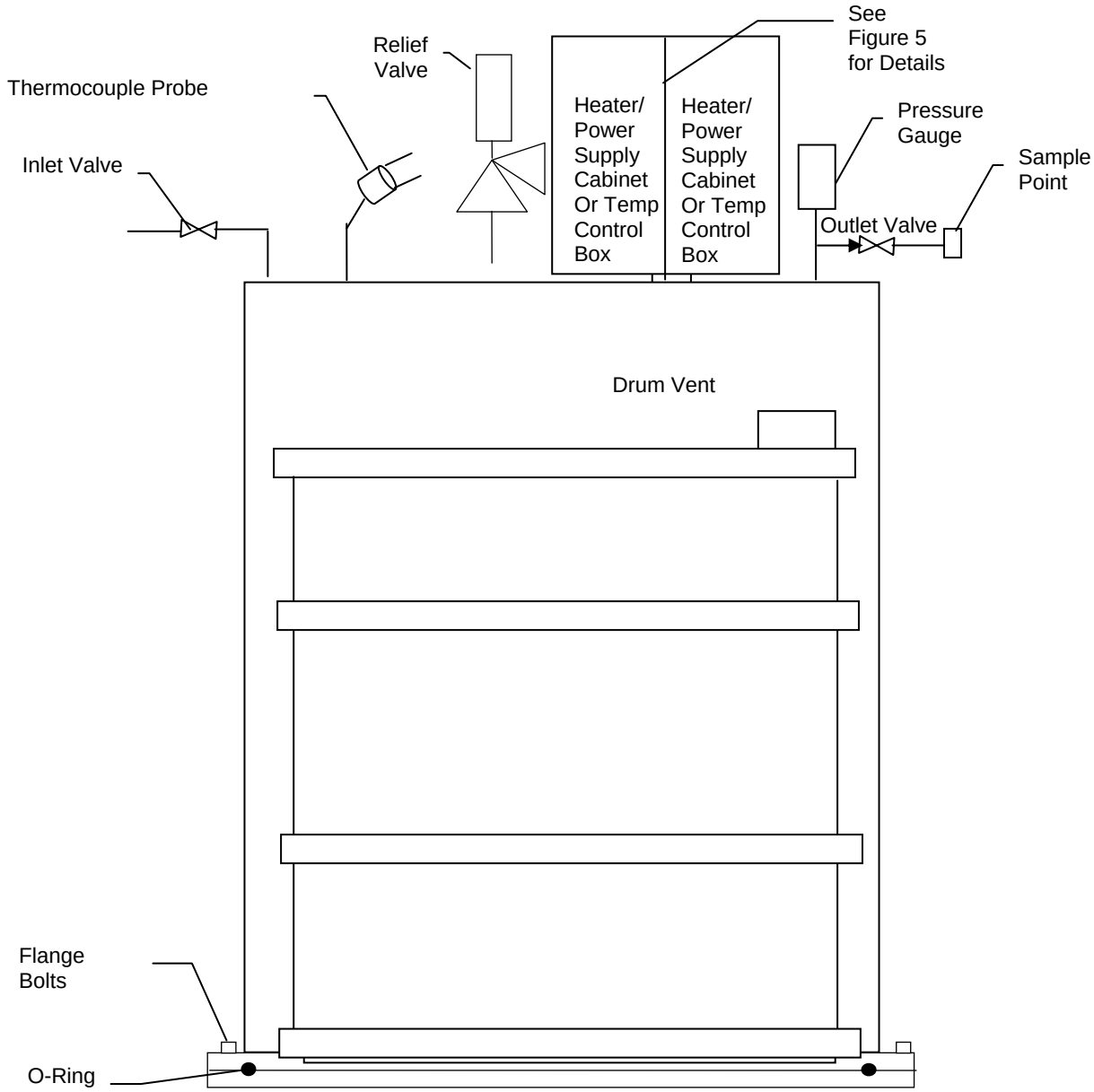

Figure 5. 85-gallon GGTC Heating System Schematic

Heater/Power Supply Cabinet (2) or Temperature Control Box (TCB)

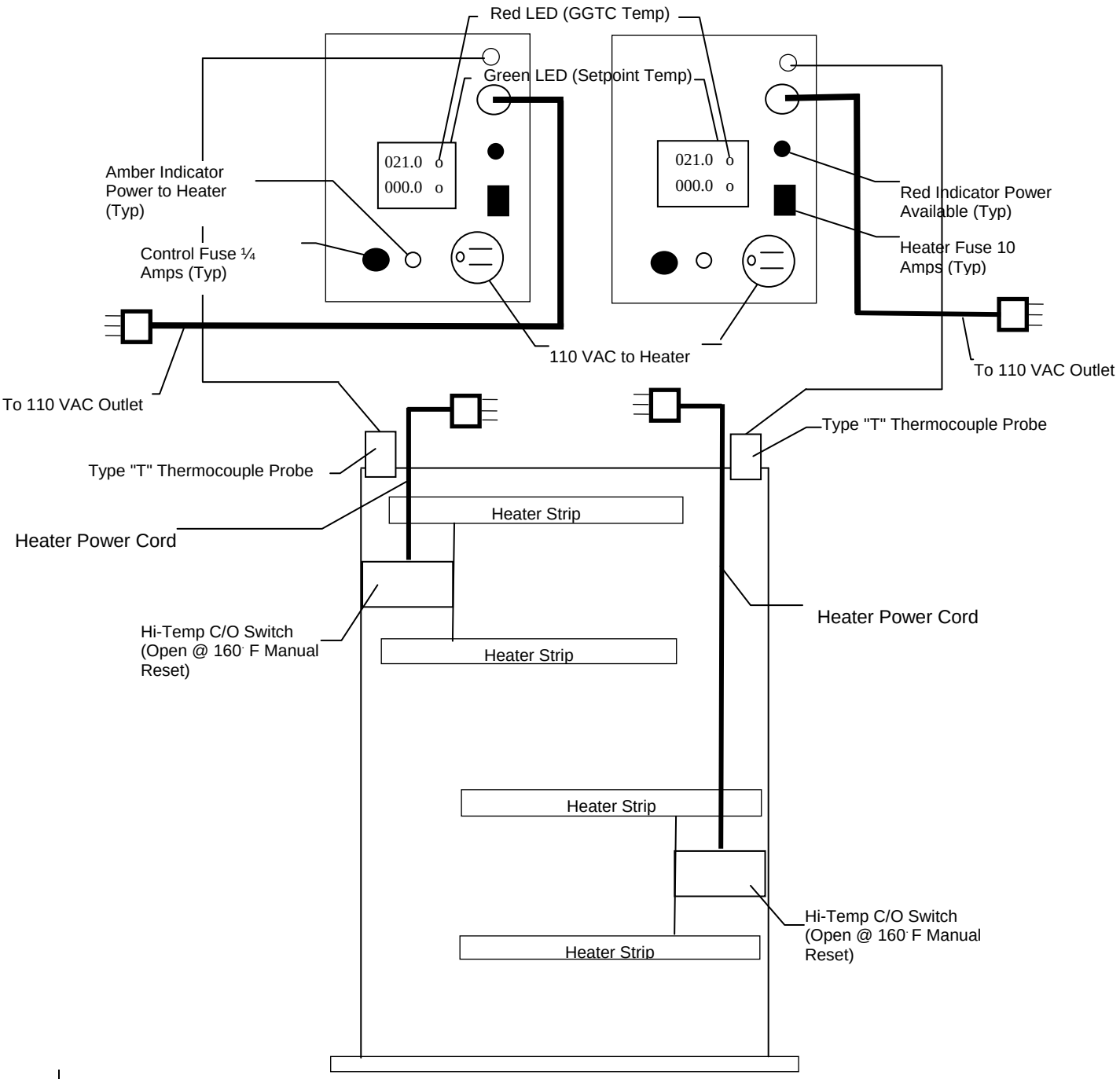

Controlled
Copy

1.1.3.3 Mobile Gas Sampling System (MGSS)

The MGSS consists of a gas chromatograph mounted on a portable cart, with an integral sampling manifold that is capable of being purged with a vacuum pump to less than 10 Torr. The gas chromatograph (GC) uses an approximately two meter long, 1/8 inch diameter MS-5A packed column, a thermal conductivity detector, and vendor software to integrate and quantify peaks. The gas chromatograph is not limited to a specific model.

The MGSS Sampling Method (Figure 6) is summarized as follows: The Operator/Technical Advisor performs calibration verification. If the prerequisites are satisfactory, the MGSS may be used to sample GGTC's. GGTC sampling by the MGSS consists of attaching the sample hose, evacuating the hose and manifold, and then purging a volume of the unknown gas into the manifold. After a complete purge, the gas is then injected into the GC and a trace is generated and analyzed. The GC vendor software determines the parts per million (ppm) concentration of the hydrogen in the GGTC. The data is exported or manually inputted to a Software Quality Assurance controlled application that is used to calculate the hydrogen generation rate, H_2/CH_4 gas generation rate, total gas generation rate and print attachments for a GGT Batch Data Report (BDR).

Controlled
Copy

Figure 6. MGSS Sampling Method

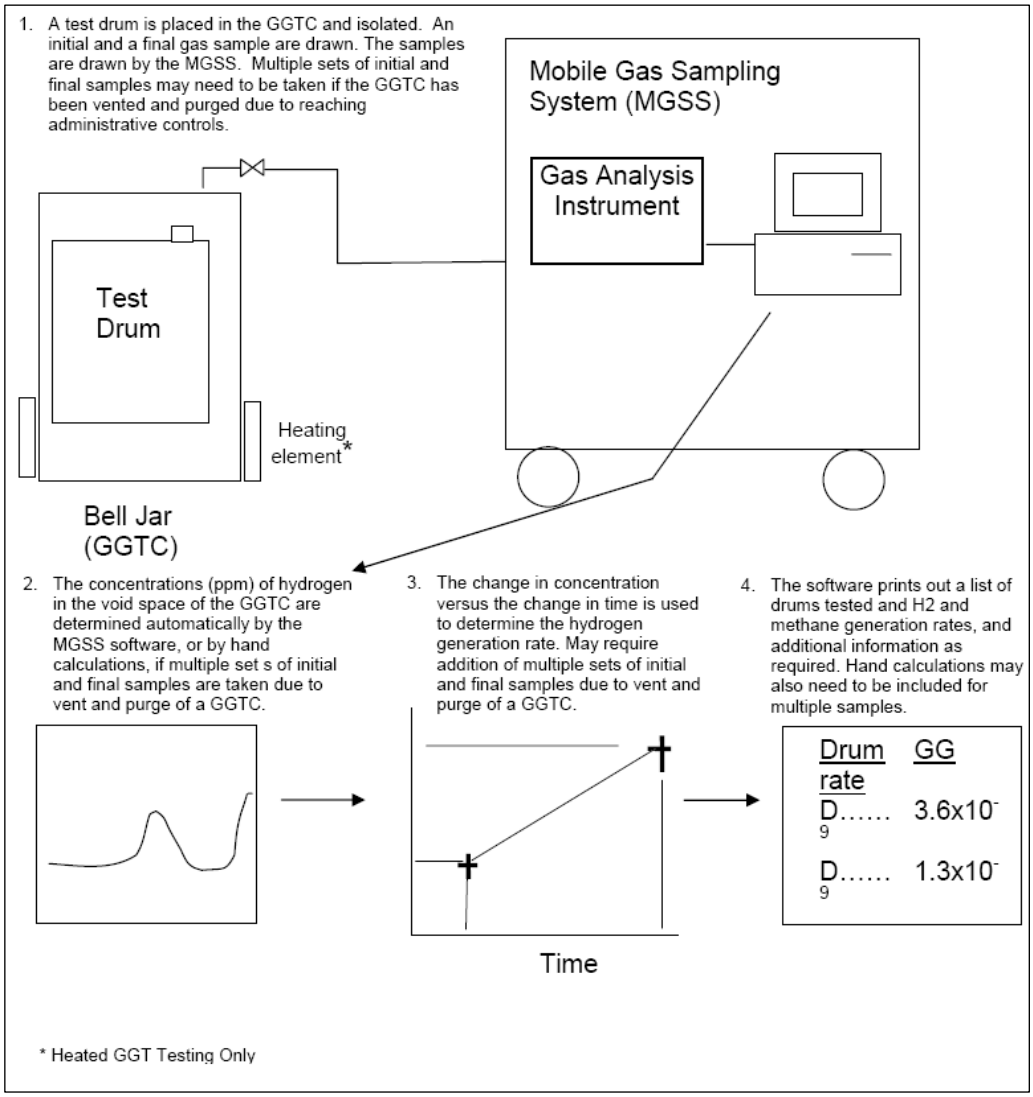

Controlled
Copy

1.1.3.4 Other Major Components

Measuring and Test Equipment (M&TE)

- Calibrated torque wrench (with a current calibration sticker) with 5/16-inch hex driver or equivalent and 5/8-inch or 9/16-inch socket, depending on the bolt size.
- Gas Generation Test Canister includes the following installed equipment:
  - 10 pounds per square inch gauge - pressure relief valve, calibrated by the manufacturer, but not recalled for periodic recalibration
  - Calibrated temperature controller(s)
  - Calibrated pressure gauge (capable of measuring up to 15 pounds per square inch)

Special Tools and Equipment

- Adjustable wrenches and/or open end wrenches
- Manual hoist equipment with current inspection tags
- Leak-detection fluid
- Air or nitrogen supply for venting of canister
- Spare O-ring for the GGTC (0.375-inch diameter, BUNA-N® O-ring, or equivalent, field cut to fit)
- Leather gloves/cut-resistant gloves, as required
- Nitrile gloves for liquids present in the GGTC
- Vacuum grease
- Anti-seize compound
- O-ring glue
- Caution – “Surface Hot to Touch” signs
- Placards or traveler for each drum with the drum number on it

1.1.4 Subsystems

There are no subsystems.

Controlled
Copy

1.1.4.1 Civil and Structural

The GGTC and MGSS are part of a testing system and not a facility. See Section 1.1.3, Major Components.

1.1.4.2 Chemical and Process

The WIPP WAC (Reference 3) requires that TRU waste not contain explosives, corrosives, or compressed gases. Non-radionuclide pyrophoric materials are prohibited at WIPP. Additionally, flammable VOCs are restricted to less than 500 ppm within payload container headspace (a level that would not challenge integrity of the container). Polychlorinated biphenyls are also limited to less than 50 ppm. Therefore, chemical hazards are not expected to result in significant consequences or significantly contribute to accidents involving radiological materials. Hazardous materials are present in less than reportable quantities or threshold planning quantities. Based on the chemical inventory (chemicals are limited to small quantities used in maintenance, contamination in mixed TRU waste), it is not anticipated that threshold quantities of the Occupational Safety and Health Administration (OSHA) Process Safety Management Standard (Title 29 Code of Federal Regulations [CFR] Part 1910.119) would be exceeded (Reference 9).

Host sites (Generators) ensure that TRU waste is not in free-liquid form, that minor residual liquids remaining in well drained internal containers (e.g., bottles, cans) do not exceed 1-inch (2.5 centimeters) in the bottom of any container and that the total liquid in the waste package does not exceed 1.0 volume percent (vol. %).

1.1.4.3 Electrical Power

- Each 55-gallon GGTC requires a 110 Volt Alternating Current, 15-amp or 20-amp supply
- Each 85-gallon GGTC requires two 110 Volt Alternating Current, 15-amp or 20-amp supplies
- The MGSS requires two 110 Volt Alternating Current, one 15-amp or 20-amp and one 20-amp supply

Controlled
Copy

2.0 DESIGN REQUIREMENTS

2.1 Specific Requirements

While quantitative design requirements have not been identified for the GGT, the system must be capable of assuring that fissionable material in its inspected drums does not exceed that permitted by the WIPP WAC (Reference 1). The facility at which the GGT operates must also establish that the system, in its site-specific implementation, meets 10 CFR 830, *Nuclear Safety Management, Subpart B, Safety Basis Requirements* (Reference 10), 10 CFR 835, *Occupational Radiation Protection* (Reference 11), and other requirements applicable to that site.

2.2 Codes and Standards

While codes and standards have not been identified as design requirements, a number of codes and standards have been used in the “as-built” system and are identified, where applicable.

2.3 Configuration Management

Any equipment modifications will be controlled in accordance with CCP-CM-001, *CCP Equipment Change Authorization and Documentation* (Reference 16).

Controlled
Copy

3.0 OPERATIONAL INFORMATION

3.1 System Control Features

3.1.1 Fire Protection

Because these operations may be performed in various types of Host site facilities, the Host site must perform Fire Hazard Assessments and analyses prior to operations within any facility. Any activities that involve welding, grinding, and cutting with open flame or high heat sources are prohibited in or on the GGTC while any waste drum is in the chamber. During a fire, personnel comply with Host site specific Procedures.

3.1.2 Radiation and Other Hazards

3.1.2.1 As Low As Reasonably Achievable (ALARA)

Radiological posting is used to alert personnel to the presence of radiation and radioactive materials and to aid in minimizing exposures and preventing the spread of contamination. Radiological posting are installed before work begins and updated as changes in radiological conditions occur or are expected.

The area of operation around the characterization equipment may be posted as a Controlled Area that bounds a larger area of operations around the equipment. Each access point to a Controlled Area (as defined at 835.2) shall be posted, whenever radiological areas or radioactive materials areas exist in the area. Individuals who enter only a Controlled Area or radioactive material area are not expected to receive a total effective dose equivalent of more than 0.1 rem (0.001 sievert) in a year [835.602 (a)] (Reference 11). Routine contamination surveys of the immediate area of the sampling should be performed.

Radiological areas are posted with signs containing the standard radiation symbol with black or magenta lettering on yellow background (835.601 [b] and 835.601 [c]) (1). The radiological postings are displayed to signify the actual or potential radiological conditions of the area. Postings are maintained in a legible condition and updated based on the most recent survey results. Signs and labels shall contain the standard radiation warning trefoil colored magenta or black on yellow background. Lettering shall be either magenta or black. Magenta is the preferred color over black (835.601 [a]). Unless circumstances do not permit, the standard radiation warning trefoil should be oriented with one blade downward and centered on the vertical axis. Lettering should not be superimposed on the standard radiation warning trefoil (Reference 13). The size of the lettering used on the sign should not detract from the clarity of the standard radiation-warning trefoil per DOE G 441.1-10, *Posting and Labeling for Radiological Control Guide for use with Title 10, CFR Part 835, Occupational Radiation Protection* (Reference 12).

Controlled
Copy

Physical barriers are used to designate the posted boundaries, when required by the Host site Radiation Work Permit (RWP). All work conducted in these areas is controlled by the approved Host site RWPs. All physical barriers shall be placed so that they are clearly visible from all directions and various elevations. They should not be easily walked over or under, except at identified access points. Rope, tape, chain, and similar barriers used to designate the boundaries of posted areas should be yellow and magenta in color. No control(s) shall be installed at any radiological area exit that would prevent rapid evacuation of personnel under emergency conditions (835.501 [e]) (1) (Reference 11).

GGTCs shall be vented after GGT has been completed. During the testing period, the canisters may have a buildup of VOCs and/or flammable gases including hydrogen, CH_4, and acid gases. The canisters shall not be ventilated to the room atmosphere causing potential employee safety concerns. Therefore, ventilation into a local ventilation system shall be performed before opening the GGTCs.

3.1.3 Industrial Hazards

The CCP-HSP-012, *CCP Health and Safety Plan for GGTP* (Reference 14), applies to the GGT Program for operations of the GGT at various Host sites. The HSP describes and documents operations and system-specific features of the GGT equipment.

3.1.3.1 Compressed Gas Cylinders

Certified gas standards and carrier gases include: ultra-high pure argon, hydrogen gas standards, and industrial grade or better nitrogen. These gases are supplied by CCP on an ongoing need throughout the operation.

3.1.4 Maintenance

Maintenance is performed in accordance with the CCP maintenance program described in procedure CCP-TP-140, *CCP Equipment Maintenance* (Reference 15).

Controlled
Copy

4.0 REFERENCES

1. DOE/WIPP-01-3187, *Quality Assurance Program Plan For TRUPACT-II Gas Generation Test Program*

2. CCP-PO-002, *CCP Transuranic Waste Certification Plan*

3. DOE/WIPP-02-3122, *Transuranic Waste Acceptance Criteria for the Waste Isolation Pilot Plant (WIPP WAC)*

4. GGT/MGSS photographs (numbered below) taken via walkdown at the INL facility 5/2006

    1) Typical Gas Generation Test Canister (GGTC) (FULL)
    2) Mobile Gas Sampling System (MGSS)
    3) Typical Gas Generation Test Canister (GGTC) (vent lines installed)
    4) Typical Gas Generation Test Canister (GGTC) (Empty)
    5) Close up of Controller
    6) Pressure Indicator and Isolation Valve
    7) Certified calibration and carrier operating gases include: ultra-high pure argon, hydrogen/methane gas standards, oxygen standards, and industrial grade nitrogen located on MGSS Cart.
    8) Electrical Cables on MGSS Cart

5. CCP-PO-016, *CCP Gas Generation Testing Program Quality Assurance Project Plan*

6. CCP-PO-003, *CCP Transuranic Authorized Methods for Payload Control (CCP CH-TRAMPAC)*

7. CCP-TP-083, *CCP Gas Generation Testing*

8. *User's Guide for Micromega CN77000 Series Control*, Omega

9. CFR 29, *Occupational Safety and Health Standards, Subsection 1910.119, Hazardous Materials*, Code of Federal Regulations, U.S. Department of Energy, Washington, DC

10. 10 CFR 830, *Nuclear Safety Management, Subpart B, Safety Basis Requirements*, Code of Federal Regulations, U.S. Department of Energy, Washington, DC

Controlled
Copy

11. 10 CFR 835, *Occupational Radiation Protection*, U.S. Department of Energy, Washington, DC

12. DOE G 441.1-10 Posting and Labeling for Radiological Control Guide for use with Title 10, CFR Part 835, *Occupational Radiation Protection*

13. DOE-STD-1027-92, *Hazard Categorization and Accident Analysis Techniques for Compliance with DOE Order 5480.23, Nuclear Safety Analysis Reports*

14. CCP-HSP-012, *CCP Health and Safety Plan for GGTP*

15. CCP-TP-140, *CCP Equipment Maintenance*

16. CCP-CM-001, *CCP Equipment Change Authorization and Documentation*

Attachment 1 – Equipment Setup Requirements

Central Characterization Project (CCP)

Mobile Characterization Unit (MCU) Installation Specifications

Equipment: Gas Generation Test Gas (GGT) Analytical Instrumentation and /55-Gallon Gas Generator Testing (GGT) Unit (Equipment #GGT-55gal. 01 through 44) (Equipment #GGT-85gal 01through 06) and Mobile Gas Sampling System (MGSS) (Equipment MGSS 01 and MGSS 02)

Summary: Table A contains information regarding general site installation and preparation information for the GGT MCU.

Table A	Installation Specifications
Weight	Approximate 55-gallon GGTC weight - 200 lbs per unit without drum Approximate 85-gallon GGTC weight - 1258 lbs per unit with drum Approximate MGSS weight - 150 lbs with wheeled cart
Primary Electrical Requirements (including overcurrent protection and grounding)	Each 55-gallon GGTC requires the following: 110 VAC, 15-amp or 20-amp supply Each 85-gallon GGTC requires the following: Two 110 VAC, 15-amp or 20-amp supply The MGSS requires the following: Two 110 VAC, one 15-amp or 20-amp supply, and one 20-amp supply
Fire Suppression	The Host site must perform Fire Hazard Assessments and analyses prior to operations within any facility.

Footprint	GGTC 55-gal footprint - 9 square feet each (3 feet x 3 feet) for “roll around” units w/casters 16 square feet each (4 feet x 4 feet) for stationary AMWTP and BBWI units on plastic pallets GGTC 85 gal footprint - approximately 11 square feet each (3 1/3 feet x 3 1/3 feet) MGSS footprint -12 sq ft (5 feet long x 2 ½ feet wide) The MGSS cart shall not obstruct ingress and egress by personnel. Adequate service area for operation of forklifts for drum movement is required.

Attachment 2 – Available References in CCP Records

The following are located in CCP Records:

- Copy of the User's Guide, Micromega CN77000 Series Controller
- GGT Drawings
- GGT/MGSS photographs (numbered below) taken via walkdown at the INL facility 5/2006.

1) Typical Gas Generation Test Canister (GGTC) (FULL)
2) Mobile Gas Sampling System (MGSS)
3) Typical Gas Generation Test Canister (GGTC) (vent lines installed)
4) Typical Gas Generation Test Canister (GGTC) (Empty)
5) Close up of Controller
6) Pressure Indicator and Isolation Valve
7) Certified calibration and carrier operating gases include: ultra-high pure argon, hydrogen/methane gas standards, oxygen standards, and industrial grade nitrogen located on MGSS Cart
8) Electrical Cables on MGSS Cart