MAINTENANCE ENGINEERING PROCEDURE

UNION CARBIDE

UNION CARBIDE CORPORATION
NUCLEAR DIVISION
OAK RIDGE GASEOUS DIFFUSION PLANT
OAK RIDGE, TENNESSEE 37830

Number MEP-105, Revision 1

Date May 28, 1975

MAINTENANCE ENGINEERING
FILE COPY
Please Return to K-1035, Rm. 127A

REMOVAL AND REPLACEMENT OF 40,000 KVA POWER TRANSFORMER

This document is approved for public release per review by:
BJC ETTP Classification & Information Control Office
Date

SCOPE

This procedure covers the removal and installation of a General Electric 40,000 kVA power transformer in the K-25 plant. This procedure does not cover the de-energizing, electrical preparations, or the regulating transformer moving.

GENERAL

A. Safe Practices

1. Applicable safe practice procedures shall be adhered to during the performance of work outlined in this procedure. A properly completed and approved Electrical Work Permit, Power (UCN-513) is required. This work should be performed only during favorable weather (no precipitation). Ensure a safe working environment inside the transformer in accordance with Safety Standard No. K-SS-8.2, prior to performing any work inside the transformer.

2. All hoisting operations shall be performed by a qualified hoisting operator directed by an attending flagman. All lifts shall be made using specifically designed lifting devices such as hooks, slings, cables, and/or fixtures as designated. All special devices shall be identified for the job on which they are to be used and all such devices shall be ET&I tested, approved, and tagged.

B. Quality Assurance

1. Prior to entering the transformer, all articles shall be removed from the employees clothing, safety glasses shall have a safety strap to prevent them from falling off, and the hard hat shall have a band to prevent it from falling off the employee's head.

2. All tools used inside the transformer shall be taped with cotton tape to the employee's wrist.

3. No unnecessary tools shall be taken into the transformer.

C. Transformer Information

1. Only the General Electric 40,000 kVA Power Transformer is covered in this procedure.

2. These are 40,000-kVA, 154,000-13,800-V, 60-Hz, Delta-Wye transformers. These transformers are cooled by forced oil and forced air. The approximate

PREPARED BY	APPROVED BY	REVIEWED FOR CLASSIFICATION
Jerry E. Good	G. Copeland	R. Longmire

transformer weights are: core and coils, 96,000 lbs; tanks and fittings, 49,500 lbs; oil, 91,500 lbs; and total weight, 237,000 lbs. The transformer is mounted on railroad tracks to facilitate replacement.

D. Special Tools and Materials Required

Quantity	Tool or Material
2	161-kV bushing slings
2	1/4" hand line, 40 ft.
3	161-kV bushing cradle
3	161-kV bushing-hole blank plates
4	13.8-kV bushing-hole blank plates
As Necessary	2" x 30' oil handling hose
2	50-ton jacks
2	3/4" steel plate, 4' x 12' sheet
2	Come-Along hoists, 3-ton
2	Tracks, railroad, 18" long (90 lbs per yard)
1	Dorsey MTX - 100 F Trailer/appropriate tractor
2	1/2"-diameter steel rod 18' long
2	1" x 7" steel plate 18" long
2	Snatch blocks, 6-ton
4	5/8" chain shackle
1	Oil storage trailer

RESPONSIBILITY

A. The Power and Utilities Maintenance supervisor is responsible for disconnecting and connecting the 161-kV and 13.8-kV cables, the fans and oil pump control cabinet, removing and replacing bushings and lightning arrestors, and Heat Actuated Detector conduit.

B. The Utilities and K-25 Mechanical supervisor is responsible for removal and replacement of the sprinkler system piping.

C. The Mechanical Services and Transportation supervisor is responsible for removing, transporting, and installing the transformer, oil conservator, oil conservator support brackets, and pressure relief diaphram piping.

PROCEDURE

A. Removal of the Transformer

1. Disconnection of the Transformer and Auxiliary Equipment

a. In accordance with the Electrical Work Permit (UCN-513), tag and check all electrical circuits associated with the transformer.

b. Check the oil for sediment, color, and dielectric strength in accordance with the General Electric Instruction Book, "Large Oil-Immersed Transformers," GEH-58H, pages 14, 15, and 16.

PH 74-3060

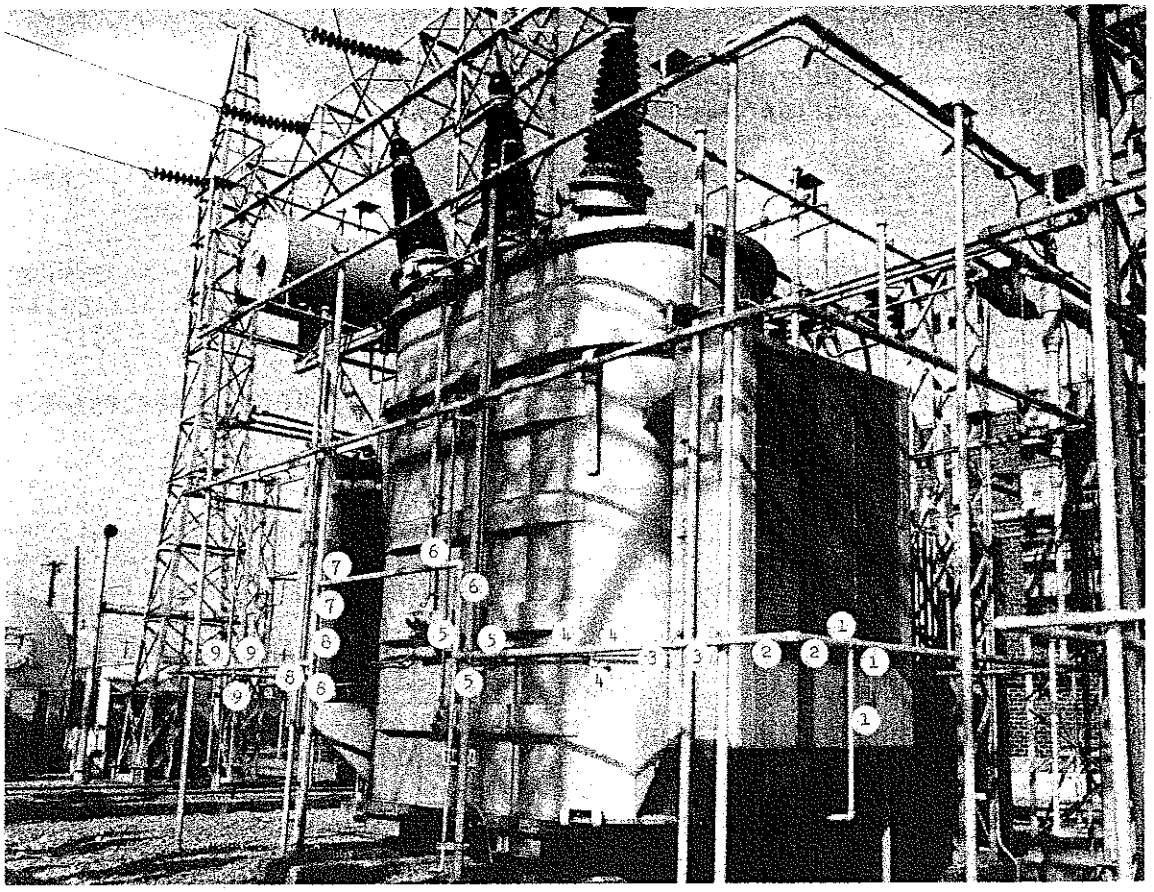

Fig. 1. A Numbering Method for the Sprinkler System Assembly and Disassembly

PH 74-3061

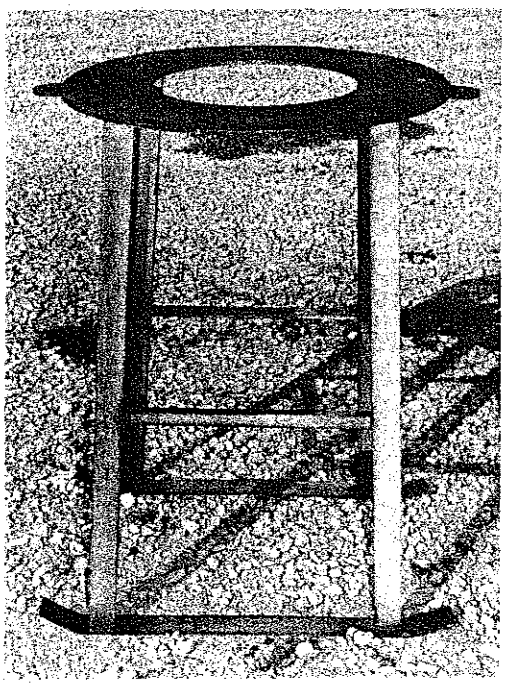

Fig. 2. 161-kV Bushing Transport Cradle

c. Disassemble the sprinkler system piping on the front side of the transformer, i.e., side opposite the regulating transformer.

NOTE: If sprinkler system is to be reused, refer to Fig. 1 for a suggested method of numbering the piping system.

d. Grade earth in front of the transformer to accommodate the Dorsey Model MTX-100F trailer. The grading should be such that the top of the float will be the same height as the transformer base plate (± 1").

e. Disconnect the primary and secondary power cables to the transformer.

f. Move mobile oil trailer into place.

g. Connect the oil pump line to the oil drain outlet on the bottom of the transformer. Remove oil until the oil level within the unit is down to the top of the transformer core. Place oil in the mobile oil trailer.

CAUTION: If the transformer must be moved in unfavorable weather (any form of precipitation) or for long moves, i.e., moves outside the plant, the oil should be removed down to the top of the coils and a 1/2 lb nitrogen pressure placed on the transformer, after bushing holes are blanked off and the tank is sealed.

h. Remove the bolts which secure the bushings to the transformer.

CAUTION: Prior to entering the transformer to disconnect the bushings, remove all articles from clothing pockets. Take the necessary precautions to ensure no foreign material enters or is left in the transformer. Ensure a safe working environment inside the transformer in accordance with Safety Standard No. K-SS-8.2.

i. Remove the bushings from the transformer and place in bushing racks (Fig. 2).

j. Doble test bushings at this time.

k. Blank-off the bushing openings on the transformer with metal plates and gaskets (Fig. 3).

l. Disconnect and remove the oil conservator and the pressure relief diaphram and piping. Place a blank cover and gasket on transformer tank opening.

B. <u>Moving of Transformer from Base onto Trailer</u>

1. Install the 18" railroad track extensions as shown in Fig. 4.

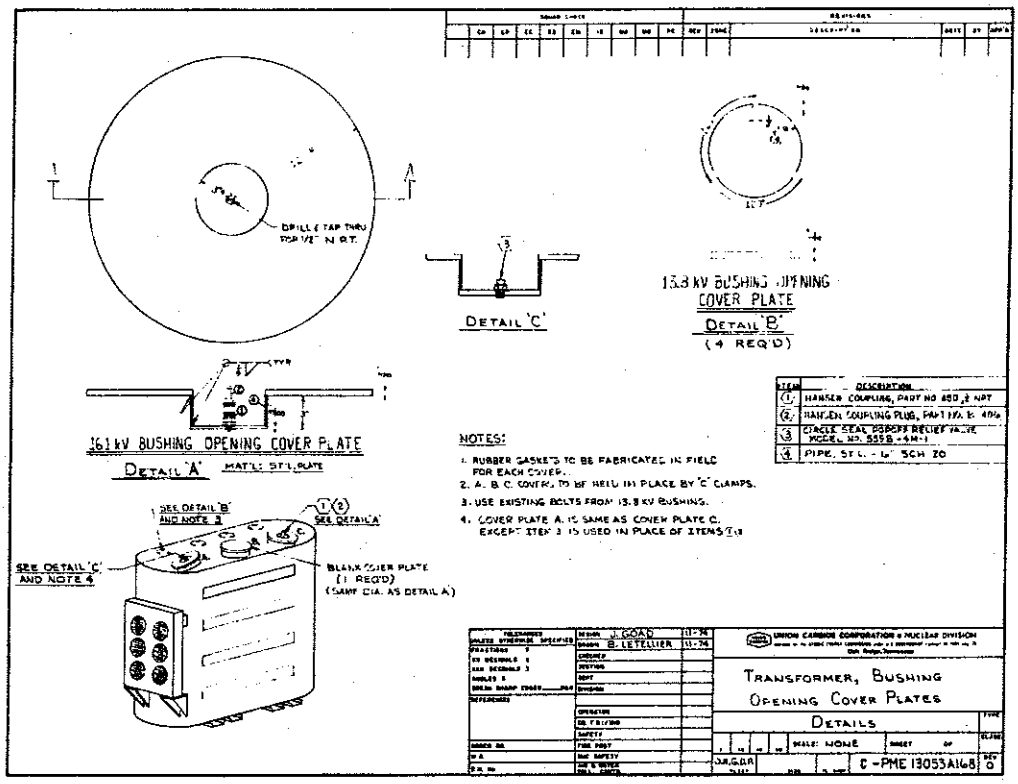
DRILL & TAP THRU FOR 1/2" N.P.T.
DETAIL 'C'
13.8 kV BUSHING OPENING COVER PLATE
DETAIL 'B'
(4 REQ'D)
161 kV BUSHING OPENING COVER PLATE
DETAIL 'A'
MAT'L: ST'L PLATE
SEE DETAIL 'B' AND NOTE 3
SEE DETAIL 'A'
SEE DETAIL 'C' AND NOTE 4
BLANK COVER PLATE (1 REQ'D) (SAME DIA. AS DETAIL A)
NOTES:
1. RUBBER GASKETS TO BE FABRICATED IN FIELD FOR EACH COVER.
2. A. B. C. COVERS TO BE HELD IN PLACE BY 'C' CLAMPS.
3. USE EXISTING BOLTS FROM 13.8 kV BUSHING.
4. COVER PLATE A. IS SAME AS COVER PLATE C. EXCEPT ITEM 3 IS USED IN PLACE OF ITEMS 1 & 2
ITEM DESCRIPTION
1 HANSEN COUPLING, PART NO 450 ½ NPT
2 HANSEN COUPLING PLUG, PART NO. B 406
3 CIRCLE SEAL POPOFF RELIEF VALVE MODEL NO. 555B-4M-1
4 PIPE, ST'L - 6" SCH 20
J. GOAD 11-74
B. LETELLIER 11-74
UNION CARBIDE CORPORATION • NUCLEAR DIVISION
TRANSFORMER, BUSHING OPENING COVER PLATES
DETAILS
SCALE: NONE
C-PME 13053A168

Fig. 3

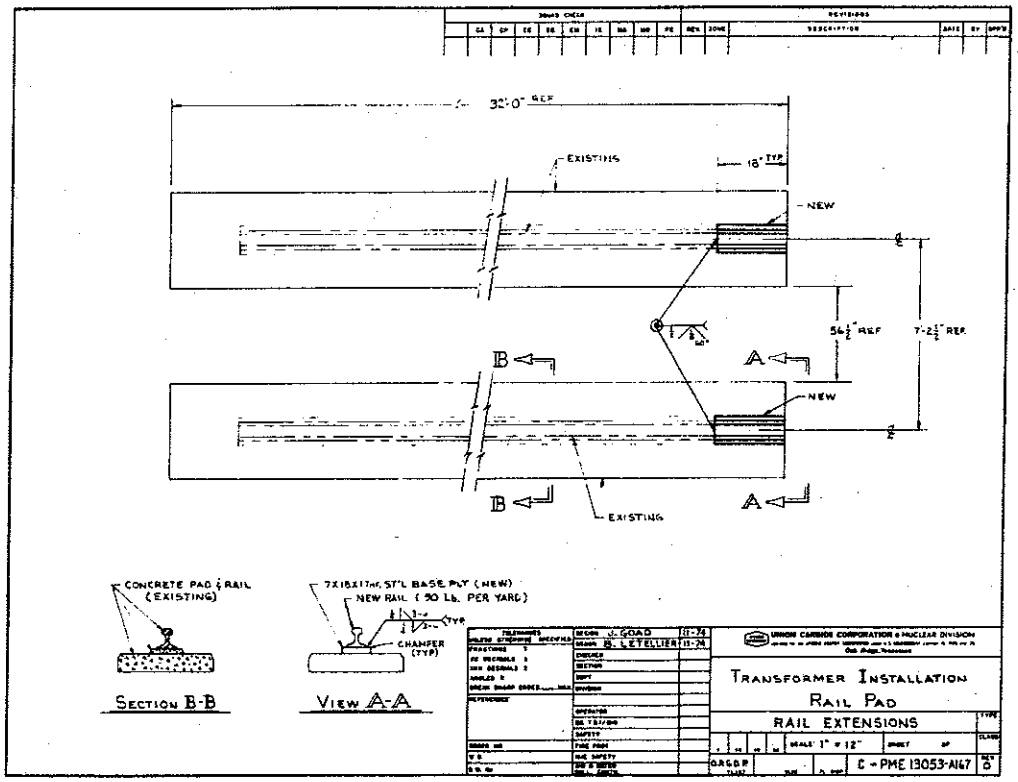
32'-0" REF
EXISTING
18" TYP
NEW
56½" REF
7'-2½" REF
B
A
NEW
B
A
EXISTING
CONCRETE PAD & RAIL (EXISTING)
SECTION B-B
7X18X17 HR. ST'L BASE PLT (NEW)
NEW RAIL (90 LB. PER YARD)
CHAMFER (TYP)
VIEW A-A
J. GOAD 11-74
B. LETELLIER 11-74
UNION CARBIDE CORPORATION • NUCLEAR DIVISION
TRANSFORMER INSTALLATION RAIL PAD
RAIL EXTENSIONS
SCALE: 1" = 12"
C-PME 13053-A167

Fig. 4

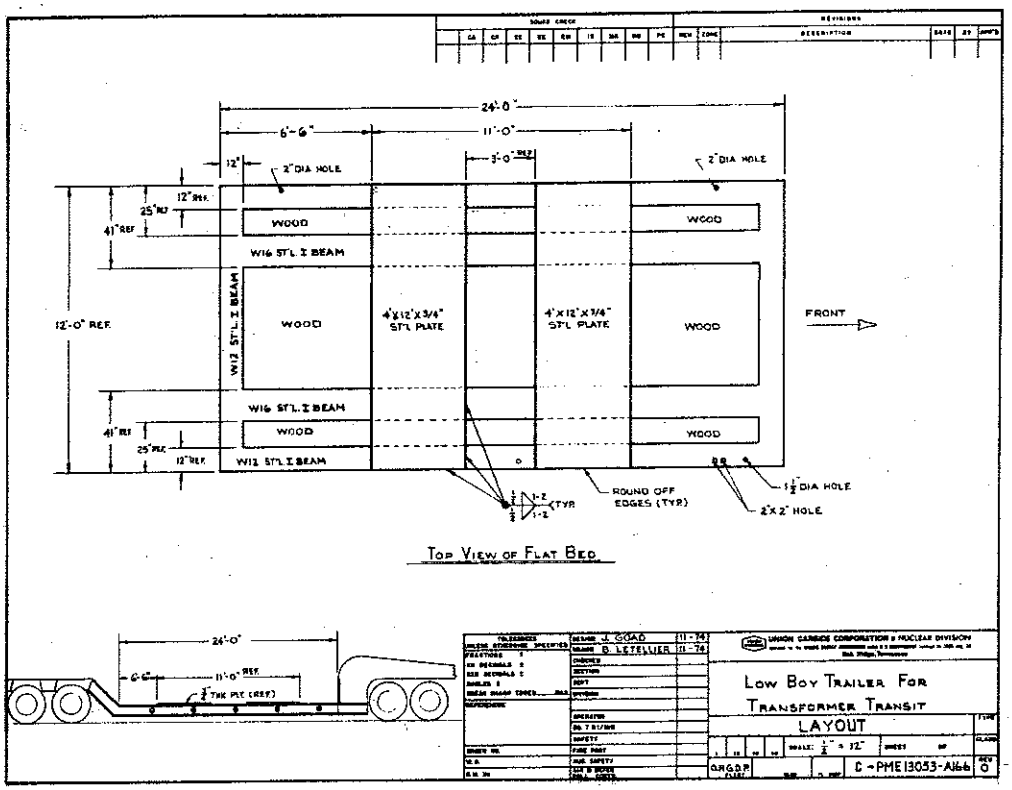
24'-0"
6'-6"
11'-0"
3'-0" REF
2" DIA HOLE
WOOD
W16 ST'L I BEAM
W12 ST'L I BEAM
4'X12'X3/4" ST'L PLATE
12'-0" REF.
FRONT
ROUND OFF EDGES (TYP)
1½" DIA HOLE
2"X2" HOLE
TOP VIEW OF FLAT BED
24'-0"
6'-6"
11'-0" REF
¾" THK PLT (REF)
J. GOAD
B. LETELLIER
UNION CARBIDE CORPORATION
NUCLEAR DIVISION
LOW BOY TRAILER FOR TRANSFORMER TRANSIT
LAYOUT
C-PME 13053-A166

Fig. 5

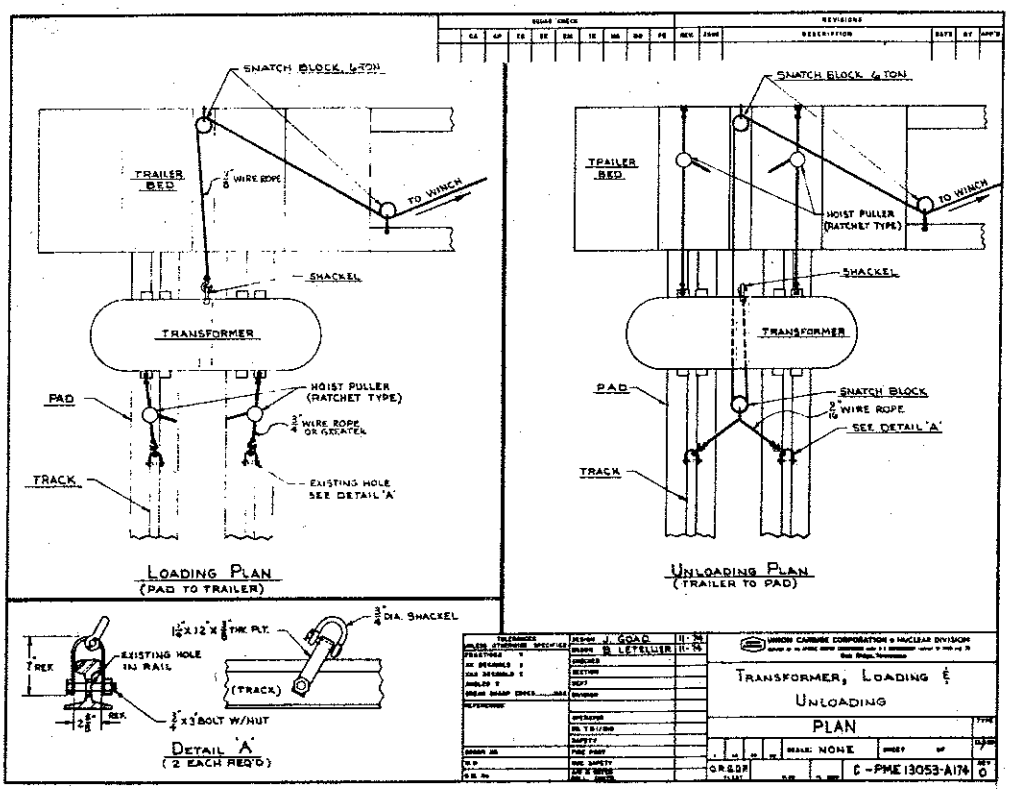
SNATCH BLOCK, 6 TON
TRAILER BED
⅝" WIRE ROPE
TO WINCH
SHACKLE
TRANSFORMER
PAD
HOIST PULLER (RATCHET TYPE)
¾" WIRE ROPE OR GREATER
TRACK
EXISTING HOLE SEE DETAIL 'A'
LOADING PLAN
(PAD TO TRAILER)
SNATCH BLOCK 6 TON
TRAILER BED
HOIST PULLER (RATCHET TYPE)
SHACKLE
TRANSFORMER
PAD
SNATCH BLOCK
⅝" WIRE ROPE
SEE DETAIL 'A'
TRACK
UNLOADING PLAN
(TRAILER TO PAD)
¾" DIA. SHACKLE
1¼"X12"X⅜" THK PLT.
EXISTING HOLE IN RAIL
(TRACK)
¾"X3" BOLT W/NUT
DETAIL 'A'
(2 EACH REQ'D)
J. GOAD
B. LETELLIER
UNION CARBIDE CORPORATION
NUCLEAR DIVISION
TRANSFORMER, LOADING & UNLOADING
PLAN
C-PME 13053-A174

Fig. 6

5. Pump the oil which was removed from the transformer back into the transformer after the oil has been properly filtered.

6. Install conduit to the control cabinet and install new wiring if necessary.

7. Perform a Doble test on the transformer.

8. Connect primary and secondary feeders to the transformer.

9. Install the sprinkler system as per Fig. 1 and numbering system.

10. Test the Heat Activated Device (HAD) for proper operation.

    a. Close the transformer sprinkler system manual gate valve.

    b. Using the HAD test kit (Part no. 63-39) actuate the HAD and observe the opening of the supply valve.

    c. Open the transformer sprinkler system manual controlling gate valve.

    d. Operate the automatic valve to release water to the sprinkler heads at full system pressure. Check and adjust the spray pattern of each sprinkler head to the proper angle, making sure that it is tightened in its final position.

11. Release the work permits and return the transformer to service.

JEG:vm